TM 9-237

DEPARTMENT OF THE ARMY TECHNICAL MANUAL

OPERATOR'S MANUAL
WELDING THEORY
AND APPLICATION

HEADQUARTERS, DEPARTMENT OF THE ARMY
1967

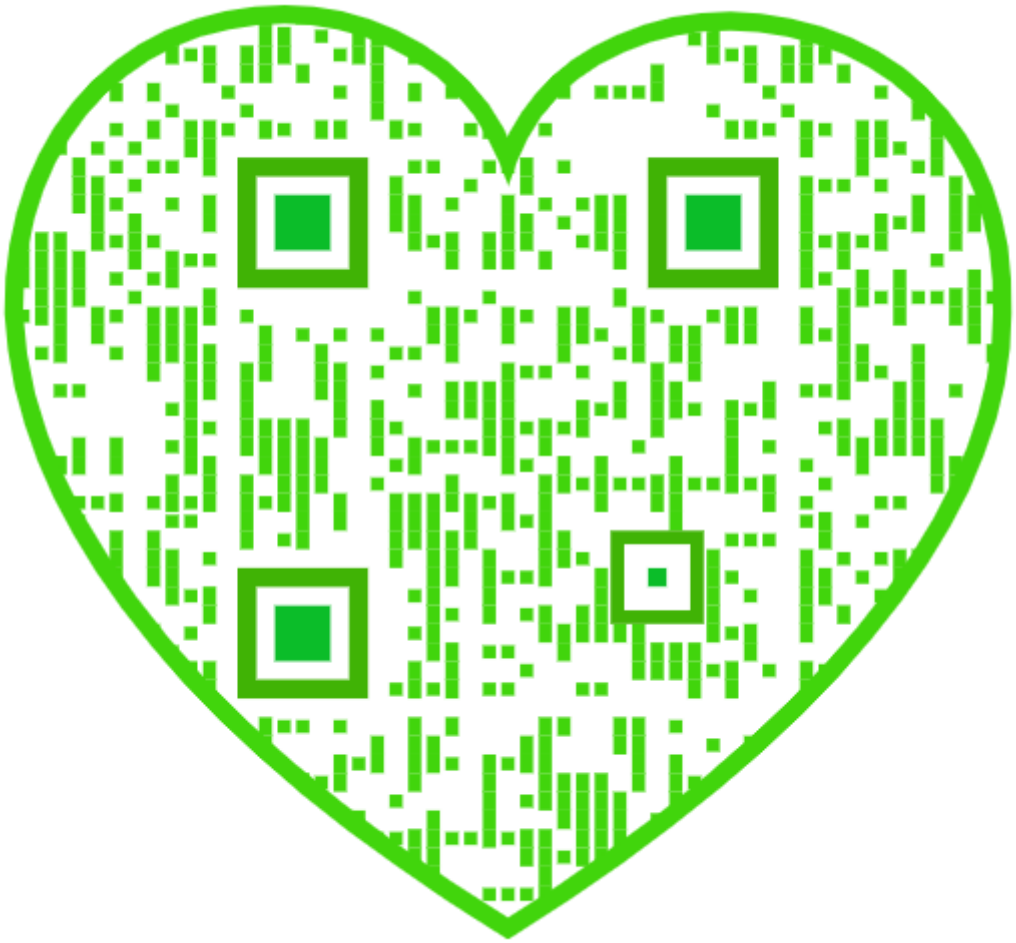

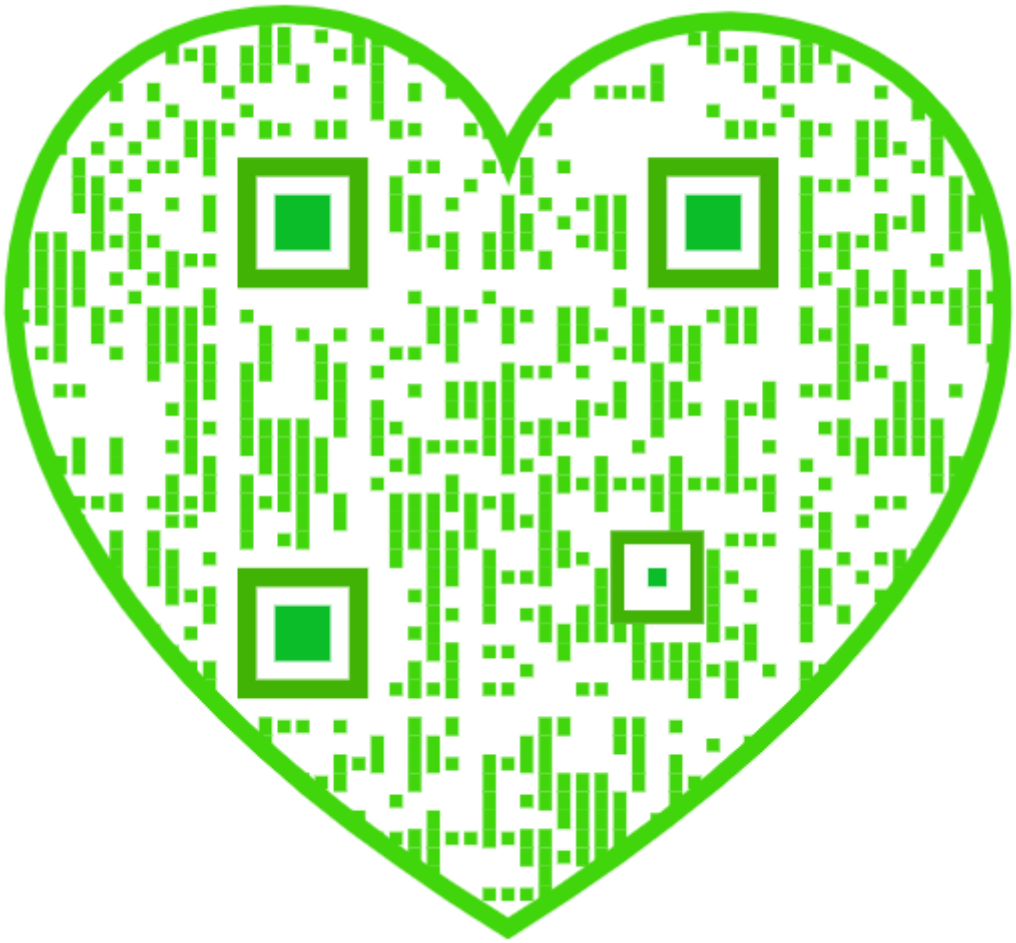

TECHNICAL MANUAL
NO. 9–237

TECHNICAL ORDER
NO. 34W4–1–5

*TM 9–237
TO 34W4–1–5

HEADQUARTERS
DEPARTMENT OF THE ARMY
AND THE AIR FORCE
Washington, D.C., *6 November 1967*

WELDING THEORY AND APPLICATION

Headquarters, Department of the Army, Washington, D.C. 1967

CONTENTS

			Paragraph	Page
CHAPTER	1.	INTRODUCTION		
Section	I.	General	1–1	3
Section	II.	Theory	1–3	4
CHAPTER	2.	METALS AND ALLOYS		
Section	I.	Characteristics	2–1	5
Section	II.	Standard metal designation	2–4	12
Section	III.	Heat treatment of steel	2–11	14
CHAPTER	3.	WELDING PROCESS		
Section	I.	Description	3–1	19
Section	II.	Nomenclature of weld	3–11	22
Section	III.	Type of welds and weld joints	3–13	24
Section	IV.	Position of welds	3–20	29
Section	V.	Expansion and contraction in welding operations	3–22	31
Section	VI.	Welding stress	3–25	36
CHAPTER	4.	SAFETY PRECAUTIONS IN WELDING OPERATIONS		
Section	I.	General safety precautions	4–1	39
Section	II.	Safety precautions in oxy-acetylene welding	4–5	40
Section	III.	Safety precautions for arc-welding	4–6	43
Section	IV.	Safety precautions for gas-shielded arc welding	4–9	44
Section	V.	Safety precautions for welding and cutting containers that held combustibles	4–11	45
CHAPTER	5.	WELDING AND CUTTING EQUIPMENT		
Section	I.	Oxy-acetylene welding equipment	5–1	49
Section	II.	Oxy-acetylene cutting equipment	5–16	61
Section	III.	Arc welding equipment and accessories	5–18	63
Section	IV.	Resistance welding equipment	5–24	74
Section	V.	Thermit welding equipment	5–25	76
Section	VI.	Forge welding equipment	5–26	77
CHAPTER	6.	OXY-ACETYLENE WELDING AND CUTTING		
Section	I.	Welding process and techniques	6–1	80
Section	II.	Welding and brazing ferrous metals	6–10	87
Section	III.	Welding, brazing, and soldering nonferrous metals	6–22	94
Section	IV.	Cutting and other uses of oxy-acetylene flame	6–39	109
CHAPTER	7.	ELECTRIC ARC WELDING AND CUTTING		
Section	I.	Welding process and technique	7–1	116
Section	II.	Heat effects in electric-arc welding	7–10	134
Section	III.	Electric-arc welding of ferrous metals	7–13	134
Section	IV.	Electric-arc welding of non-ferrous metals	7–20	139
Section	V.	Cutting and hard surfacing with the electric-arc	7–26	153
Section	VI.	Under water cutting and welding with the electric-arc	7–32	161

*This technical manual supersedes TM 9–237/TO 34W4–1–1, 17 October 1958, including C1, 30 December 1960, C2 11 August 1961, C3, 24 January 1963, C4, 13 October 1966, and TM 9–237/1/TO 34W4–1–10, 11 May 1960.

			Paragraph	Page
CHAPTER	8.	OTHER WELDING PROCESSES		
Section	I.	General	8-1	163
Section	II.	Resistance welding	8-3	163
Section	III.	Thermit welding	8-9	167
Section	IV.	Forge welding	8-12	168
CHAPTER	9.	MAINTENANCE WELDING OPERATIONS FOR MILITARY EQUIPMENT		
Section	I.	General	9-1	170
Section	II.	Welding automotive equipment	9-7	171
Section	III.	Welding artillery equipment	9-14	175
Section	IV.	Armor plate welding and cutting	9-17	175
Section	V.	Pipe welding	9-25	192
CHAPTER	10.	TESTING OF WELDS		
Section	I.	Performance testing	10-1	201
Section	II.	Physical testing	10-4	202
CHAPTER	11.	PRINT READING AND WELDING SYMBOLS		
Section	I.	Print reading	11-1	210
Section	II.	Weld and welding symbols	11-4	212
CHAPTER	12.	GLOSSARY OF WELDING TERMS		
Section	I.	General	12-1	233
Section	II.	Welding terms	12-3	233
APPENDIX	A.	REFERENCES	A-1	245
	B.	PROCEDURE GUIDES FOR WELDING	B-1	248
	C.	TROUBLE SHOOTING	C-1	268
	D.	MATERIALS USED FOR BRAZING, WELDING, SOLDERING, ARC CUTTING, AND METALLIZING	D-1	275
	E.	MISCELLANEOUS DATA	E-1	287
Index			I-1	292

COPYRIGHT NOTICE: Copyrighted material contained herein is reprinted by permission of American Welding Society, New York, N.Y.; Dow Chemical Co., Midland, Mich., Linde Air Products Co., New York, N.Y.; Welding Engineer Publications Inc., Morton Grove, Ill.; and Industrial Publishing Co., Cleveland Ohio.

CHAPTER 1

INTRODUCTION

Section I. GENERAL

1–1. Scope

a. This technical manual is published for use of personnel concerned with welding and other metal joining operations in the manufacture and maintenance of materiel. It contains information as outlined below:

(1) Basic welding processes.

(2) Characteristics, identification, and heat treatment of various metals.

(3) Classification of steels.

(4) Welding arc cutting processes.

(5) Safety precautions.

(6) Testing of welds.

(7) Welding symbols.

b. Appendix A contains a list of current references, including supply and technical manuals and other available publications relating to welding and cutting operations.

c. Appendix B contains procedure guides for welding.

d. Appendix C contains a trouble shooting chart.

e. Appendix D contains a list of materials used for brazing, welding, soldering, arc-cutting, and metallizing.

f. Appendix E contains miscellaneous data as to temperature ranges, melting points, and other information not contained in the narrative portion of this manual.

g. Reports of errors, omissions, and recommendations for improving this publication are encouraged. Reports should be submitted on DA Form 2028 (Recommended Changes to DA publications) and forwarded direct to Commanding General, Headquarters, U.S. Army Weapons Command, ATTN: AMSWE–SMM–P, Rock Island Arsenal, Rock Island, Illinois 61201.

1–2. Forms, Records, and Reports

a. *General.* Responsibility for the proper execution of forms, records, and reports rests upon the officers of all units maintaining equipment. However, the value of accurate records must be fully appreciated by all persons responsible for their completion, maintenance, and use. Records, reports, and authorized forms are normally utilized to indicate the type, quantity, and condition of materiel to be inspected, to be repaired, or to be used for repair. Properly executed forms convey authorization and serve as records for repair or replacement of materiel requiring further repair to shops in arsenals, depots, etc. The forms, records, and reports establish the work required, the progress of the work and the status of the materiel upon completion of its repair.

b. *Authorized Forms.* The forms generally applicable to units operating or maintaining this materiel are listed in appendix A. For a listing of all forms, refer to DA Pam 310–2. For instructions on the use of these forms, refer to TM 38–750.

c. *Field Reports of Accidents.* The reports necessary to comply with requirements of the Army safety program are prescribed in detail in AR 385–40. These reports are referenced whenever accidents involving injury to personal or damage to materiel occur.

Section II. THEORY

1–3. General

Welding is any metal joining process wherein coalescence is produced by heating the metal to suitable temperatures, with or without the application of pressure and with or without the use of filler metals. Theoretically this covers brazing and soldering since these are basically welding procedures. Basic welding processes are described and illustrated in this manual.

1–4. Metals

a. Metals are confined into two classes, ferrous and nonferrous. Ferrous metals are those in the iron class and are magnetic in nature. These metals consist of iron, steel, and alloys related to them. Nonferrous metals are metals that contain either none or very small amounts of ferrous metals and are generally classed within the aluminum, copper, magnesium, lead, etc. groups.

b. Welding processes for these metals are varied and information contained in this manual covers theory and application of welding for all type metals including alloys recently developed.

CHAPTER 2

METALS AND ALLOYS

Section I. CHARACTERISTICS

2–1. General

Most of the metals and alloys used in Army material can be welded by one or more of the processes described in this manual. This section describes the characteristics of metals and their alloys, with particular reference to their significance in welding operations.

2–2. Properties of Metals

a. *Tensile Strength.* Tensile strength is the ability of a material to resist being pulled apart by opposing forces acting in a straight line. It is expressed as the number of pounds of force required to pull apart a bar of the material one inch wide and one inch thick.

b. *Shear Strength.* Shear strength is the ability of a material to resist being fractured by opposing forces not acting in a straight line.

c. *Compressive Strength.* Compressive strength is the ability of a material to withstand pressures acting on a given plane.

d. *Elasticity.* Elasticity is the ability of material to return to its original size, shape, and dimensions after being deformed.

(1) The elastic limit is the point at which permanent deformation begins.

(2) The yield point is the point at which a definite deformation occurs with little or no increase in load.

(3) The yield strength is the number of pounds per square inch required to produce deformation to the yield point.

e. *Modulus of Elasticity.* The modulus of elasticity is the ratio of the internal stress to the strain produced.

f. *Coefficient of Linear Expansion.* The coefficient of linear expansion is the increase in length of a body for a given rise in temperature.

g. *Ductility.* Ductility is the ability of a material, such as copper, to be drawn or stretched permanently without rupture or fracture. Lack of ductility is brittleness.

h. *Malleability.* Malleability is the ability of a material such as lead to be deformed or compressed (hammered or rolled) permanently without rupture or fracture.

i. *Toughness.* The combination of high strength and high ductility, toughness is the ability of a material to resist the start of permanent distortion plus the ability to resist failure after deformation has begun.

j. *Hardness.* Hardness is the ability of material to resist penetration and wear by another material. It takes a combination of hardness and toughness to withstand heavy pounding. The hardness of a metal is directly related to its machinability, since toughness decreases as hardness increases.

k. *Machinability.* Machinability is the ease or difficulty with which a material can be machined.

l. *Corrosive Resistance.* Corrosive resistance to eating away or wearing by the atmosphere, moisture, or other agents.

m. *Abrasion Resistance.* Abrasion resistance is the resistance to wearing by friction.

n. *Heat and Electrical Conductivity.* Heat and electrical conductivity is the ability of a material to conduct or transfer heat or electricity.

o. *Specific Gravity.* Specific gravity is the ratio of weights between two objects of equal volume, one of which is always water.

2–3. Categories of Metals

a. General. All metals fall within two categories. Either they contain more than fifty percent iron and are considered ferrous metals or they contain less than fifty percent iron and are considered nonferrous metals.

b. *Ferrous Metals.*

(1) *WROUGHT IRON.* Wrought iron is almost pure iron. In the process of manufacture some slag is mixed with iron to form a fiberous structure in which long stringers of slag are mixed with long threads of iron. Because of the presence of slag wrought iron resists corrosion and oxidation. It can be gas and arc welded, machined, plated, and is easily formed. However, wrought iron has low hardness and low fatigue strength.

(A) *APPEARANCE.* The appearance of wrought iron is the same as that of rolled, low carbon steel.

(B) *FRACTURE.* Break is jagged due to fibrous structure.

(C) *SPARK TEST.* When wrought iron is ground, straw colored sparks form near the grinding wheel and change to white forked sparklers near the end of the stream.

(D) *TORCH TEST.* Wrought iron melts quietly without sparking. It has a peculiar slag coating with white lines which are oily or greasy in appearance.

(2) *CAST IRON.* Cast iron is a man made alloy of iron, carbon, and silicon. A portion of the carbon exists as free carbon or graphite. Total carbon content is between 1.7 and 4.5 percent.

(A) *GRAY CAST IRON.* Gray cast iron contains 90 to 94 percent pure iron with varying proportions of carbon, manganese, phosphorus, silicon, and sulfur. Special high strength grades also contain small amounts of nickel, chromium, and/or mobybdenum. Commercial gray cast iron has 2.5 to 4.5 percent carbon. About 1 percent of the carbon is combined with the iron and about 2.75 percent remains in the free state.

1. APPEARANCE. The unmachined surface is very dull gray and may be somewhat roughened by the sand mold used in casting the part.

2. FRACTURE. Nick a corner with a chisel or hacksaw and then strike it with a sharp hammer blow. The dark gray broken surface is caused by fine black specks of carbon present in the form of graphite. Cast iron breaks short when fractured. Small brittle chips made with a chisel break off as soon as they are formed.

3. SPARK TEST. A small volume of dull, red sparks that follow a straight line form close to the grinding wheel. These break up into many fine repeated spurts which change to a straw color.

4. TORCH TEST. The torch test results in a puddle of molten metal that is quiet and has a jellylike consistency. When the torch flame is raised the depression in the surface of the molten puddle disappears instantly. A heavy, tough film forms on the surface as it melts. The molten puddle is slow to solidify and gives off no sparks.

(B) *WHITE CAST IRON.* When gray cast iron is heated to the molten state the carbon completely dissolves in the iron, probably combining chemically with it. If this molten metal is cooled quickly the two elements remain in the combined state and white cast iron is formed. The carbon in this type of iron generally measures from 2.5 to 4.5 percent by weight and is referred to as combined carbon. White cast iron is very hard and brittle, often impossible to machine, and has a silvery white fracture.

(C) *MALLEABLE CAST IRON.* Malleable cast iron is made by heating white cast iron to between 1,400 and 1,700 degrees F. for 150 hours in boxes containing hematite ore or iron scale. This heating causes a portion of the combined carbon to change into the free state. This free carbon separates in a different manner than the carbon in gray cast iron and is called temper carbon. It exists in the form of small somewhat rounded particles of carbon, which give malleable iron castings the ability to bend before breaking and to withstand greater shock loads. The castings have more properties like those of pure iron; that is, high strength, ductility, toughness, and ability to resist shock. Malleable cast iron can be welded and brazed. Any welded part should be annealed after welding.

1. APPEARANCE. The surface of malleable cast iron is very much like gray cast iron but is generally free from sand. It

is dull gray and somewhat lighter in color than gray cast iron.

2. FRACTURE. When malleable cast iron is fractured the central portion of the broken surface is dark gray with a bright steellike band at the edges. The appearance of the fracture may best be described as a picture frame. When of good quality, malleable cast iron is much tougher than other cast irons and does not break short when nicked.

3. SPARK TEST. When malleable cast iron is ground the outer bright layer gives off bright sparks like steel. As the interior is reached the sparks quickly change to a dull red color near the wheel. These sparks from the interior section are very much like those of cast iron, however, they are somewhat longer and are present in a larger volume.

4. TORCH TEST. Molten malleable cast iron boils under the torch flame. After the flame has been withdrawn the surface will be full of blowholes. The melted parts are very hard and brittle and when fractured have the appearance of white cast iron. The outside bright steellike band gives off sparks, but the center does not.

(3) *STEEL.* A form of iron, steel contains less carbon than cast iron but considerably more than wrought iron. The carbon content is from 0.03 to 1.7 percent. Basic carbon steels are alloyed with other elements, such as chromium and nickel, to increase certain physical properties of the metal.

(A) *LOW CARBON STEELS.* These are nonalloy steels which contain up to 0.30 percent carbon. They are soft, ductile, can be rolled, punched, sheared, and worked when either hot or cold. They can be machined, readily welded by all methods, and do not harden to any appreciable amount when quenched from a high temperature.

1. APPEARANCE. The appearance of the steel depends upon the method of preparation rather than upon composition. Cast steel has a relatively rough, dark gray surface, except where machined. Rolled steel has fine surface lines running in one direction. Forged steel is usually recognizable by its shape, hammer marks or fins.

2. FRACTURE. When low–carbon steels are fractured the color is bright crystalline. They are tough when chipped or nicked.

3. SPARK TEST. The steel gives off sparks in long yellow-orange streaks, brighter than cast iron, that show some tendency to burst into white forked sparkles.

4. TORCH TEST. The steel gives off sparks when melted and solidifies almost instantly.

(B) *MEDIUM CARBON STEELS.* These are nonalloy steels which contain from 0.30 to 0.45 percent carbon. These steels may be heat treated after fabrication and used for general machining and forging of parts which require surface hardness and strength. They are manufactured in bar form and in the cold rolled or the normalized and annealed condition. During welding the weld zone will become hardened if cooled rapidly, and must be stress relieved after welding.

(C) *HIGH CARBON STEELS.* These are nonalloy steels which contain from 0.45 to 0.90 percent carbon. These steels are used to manufacture tools which are heat treated after fabrication to develop the hard structure necessary to withstand high shear stress and wear. They are manufactured in bar, sheet, and wire forms and in the annealed or normalized and annealed condition in order to be suitable for machining before heat treatment. The steels are difficult to weld because of the hardening effect of heat at the welded joint.

1. APPEARANCE. The unfinished surface of high carbon steels is dark gray and similar to other steels.

2. FRACTURE. High carbon steels usually produce a very fine grained fracture, whiter than low carbon steels. Tool steel is harder and more brittle than plate steel or other low carbon material. High carbon steel can be hardened by heating to a good red and quenching in water. Low carbon steel, wrought iron, and steel castings cannot be hardened.

3. SPARK TEST. High carbon steel gives off a large volume of brilliant, yellow-orange sparklers.

4. TORCH TEST. Molten high carbon steel is brighter than low carbon steel and the melting surface has a cellular appearance. It sparks more freely than low carbon (mild) steel and the sparks are whiter.

(D) *HIGH CARBON TOOL STEELS.* These are nonalloy which contain from 0.60 to 1.70 percent carbon. These steels are used

to manufacture tools and other similar parts where high hardness is required to maintain a sharp cutting edge. They are relatively difficult to weld due to the high carbon content. A spark test shows a moderately large volume of white streaks having many fine, repeating bursts.

(4) *CAST STEEL.* In general welding is difficult on steel castings containing over 0.3 percent carbon and 0.2 percent silicon. Alloy steel castings containing nickel, molybdenum or combinations of these metals are readily welded if the carbon content is low. Those containing chromium or vanadium are more difficult to weld satisfactorily.

(A) *APPEARANCE.* The surface of cast steel is brighter than cast or malleable iron and sometimes contains small bubblelike depressions.

(B) *FRACTURE.* The color of a fracture in cast steel is bright crystalline. This steel is tough and does not break short. Steel castings are tougher than malleable iron and chips made with a chisel curl up more.

(C) *SPARK TEST.* The sparks created from cast steel are much brighter than those from cast iron. See paragraph 2—3b(2).

(D) *TORCH TEST.* When melted, cast steel sparks and solidifies quickly.

(5) *STEEL FORGING.* Steel forgings may be of carbon or alloy steels. Alloy steel forgings are harder and more brittle than low carbon steels.

(A) *APPEARANCE.* The surface of steel forgings is smooth. Where the surface of drop forgings has not been finished there will be evidence of the fin which results from the metal squeezing out between the two forging dies. All forgings are covered with reddish-brown or black scale, unless they have been purposely cleaned.

(B) *FRACTURE.* The color of a fracture in a steel forging varies from bright crystalline to silky gray, depending on the type of metal used. When the specimen is nicked the chips are tough, and harder to break, and have a finer grain than cast steel.

(C) *SPARK TEST.* The sparks given off are long, yellow-orange streamers and are typical steel sparks. Sparks from high carbon steel are much brighter and lighter than those from low carbon steel.

(D) *TORCH TEST.* Steel forgings spark when melted. The sparks increase in number and brilliance as the carbon content becomes greater.

(6) *ALLOY STEELS.* Alloy steels have greater strength and durability than other carbon steels and a given strength is secured with less material weight. Their economical use depends upon proper heat treatment.

(A) *CHROMIUM ALLOY STEELS.* Chromium is used as an alloying element in carbon steels to increase hardenability, corrosion resistance, and shock resistance. It imparts high strength with little loss in ductility. Steels containing 1 to 2 percent chromium have no outstanding features in the spark test. Chromium in large amounts shortens the spark stream length to one half that of the same steel without chromium, but it does not appreciably affect the stream's brightness.

(B) *NICKEL ALLOY STEELS.* Nickel increases the toughness, strength, and ductility of steels. It lowers the hardening temperature so that an oil quench rather than a water quench is used for hardening. The nickel spark has a short, sharply defined dash of brilliant light just before the fork. In the amounts found in SAE steels, nickel can be recognized only when the carbon content is so low that the bursts are not too prominent.

(C) *HIGH CHROMIUM NICKEL ALLOY (stainless) STEELS.* These high alloy steels cover a wide range of compositions. Their stainless, corrosion, and heat resisting properties vary with the alloy content, and are due to the formation of a very thin oxide film which forms on the surface of the metal. The sparks given off, during a spark test, are straw colored near the grinding wheel and white near the end of the streak. There is a medium volume of streaks having a moderate number of forked bursts.

(D) *MANGANESE ALLOY STEELS.* Manganese is used in steel to produce greater toughness, wear resistance, easier hot rolling and forging. Increase in managanese content decreases the weldability of steel. Steels containing this element produce a spark similar to a carbon spark. A moderate increase in manganese increases the volume of the spark stream and the intensity of the bursts. A steel containing more than a normal amount of

manganese will spark smiliar to a high carbon steel with a lower manganese content. For instance, a steel containing 0.55 percent carbon and no alloying element will have the same spark characteristics as a steel containing 1.60 to 1.90 precent manganese.

(E) *MOLYBDENUM ALLOY STEELS.* Molybdenum increases hardenability, which is the depth of hardening possible through heat treatment. The impact fatigue property of the steel is improved with up to 0.60 percent molybdenum. Above 0.60 percent molybdenum the impact fatigue property is impaired. The wear resistance is improved with molybdenum content above about 0.75 percent. Molybdenum is sometimes combined with chromium, tungsten, or vanadium to obtain desired properties. Steels containing this element produce a characteristic spark with a detached arrowhead similar to that of wrought iron. It can be seen even in fairly strong carbon bursts. Molybdenum alloy steels contain either nickel and/or chromium.

(F) *TITANIUM AND COLUMBIUM (NIOBIUM) ALLOY STEELS.* These elements are used as additional alloying agents in low carbon content, corrosion resistant steels. They support resistance to intergranular corrosion after the metal is subjected to high temperatures for a prolonged period of time.

(G) *TUNGSTEN ALLOY STEELS.* Tungsten, as an alloying element in tool steel, tends to produce a fine, dense grain when used in relatively small quantities. When used in larger quantities, from 17 to 20 percent, and in combination with other alloys, it produces a steel that retains its hardness at high temperatures. This element is usually used in combination with chromium or other alloying agents. In a spark test tungsten will impart a dull red color to the spark stream near the wheel. It also shortens the spark stream, decreases the size of or completely eliminates the carbon burst. A tungsten steel containing about 10 percent tungsten causes short, curved, orange spear points at the end of the carrier lines. Still lower tungsten content causes small white bursts to appear at the end of the spear point. Carrier lines may be anything from dull red to orange, depending on the other elements present, providing the tungsten content is not too high.

(H) *VANADIUM ALLOY STEELS.* Vanadium is used to help control grain size. It tends to increase hardenability and causes marked secondary hardness, yet resists tempering. It is also added to steel during manufacture for the purpose of removing oxygen. Alloy steels containing vanadium produce sparks with a detached arrowheat at the end of the carrier line similar to those arising from molybdenum steels. This spark test is not a positive one for vanadium steels.

(I) *SILICON ALLOY STEELS.* Silicon is added to steel to obtain greater hardenability and corrosion resistance. It is often used with manganese to obtain a strong tough steel.

(J) *HIGH SPEED TOOL STEELS.* These steels are usually special alloy compositions designed for cutting tools. The carbon content ranges from 0.70 to 0.80 percent. They are difficult to weld except by the atomic hydrogen method. A spark test will impart a few long forked sparks which are red near the wheel and straw colored near the end of the spark stream.

(K) *HIGH STRENGTH, LOW ALLOY, TEMPERED STRUCTURAL STEELS.* High yield strength, low alloy structural steels (often referred to as "constructional alloy steels") are special low carbon steels containing specific small amounts of alloying elements. These steels are quenched and tempered to obtain a yield strength of 90,000 to 100,000 psi and a tensile strength of 100,000 to 140,000 psi, depending upon size and shape. Structural members fabricated of these high strength steels may have smaller cross sectional areas than common structural steels and still have equal strength. In addition, these steels are more corrosion and abrasion resistant. Current examples of these structural steels are U.S. Steel Corp., "T–1", and Bethlehem Steel Corp., "RQ–100A" series. These steels, and those of other manufacturers, must meet ASTM specification A–514 and A–517. In a spark test this alloy appears very similar to the low carbon steels.

Note. **This type steel is much tougher than low carbon steels, therefore, shearing ma-**

chines must be twice the capacity required for low carbon steels.

c. *Nonferrous Metals and Alloys.*

(1) *ALUMINUM.* Aluminum is a light weight, soft, low strength metal which can easily be cast, forged, machined, formed, and welded. It is suitable only in low temperature applications, except when alloyed with specific elements.

(A) *APPEARANCE.* Aluminum is light gray to silver in color, very bright when polished, dull when oxidized, and light in weight.

(B) *FRACTURE.* A fracture in aluminum sections show a smooth and bright structure.

(C) *SPARK TEST.* No sparks are given off.

(D) *TORCH TEST.* Aluminum does not show red before melting. It holds its shape until almost molten, then collapses suddenly. A heavy film of white oxide forms instantly on the molten surface.

(2) *ALUMINUM ALLOYS.* Commercial aluminum alloys are classified into two groups; wrought alloys and cast alloys. The wrought alloy group includes those alloys which are designed for mill products whose final physical forms are obtained by working the metal mechanically. The casting alloy group includes those alloys whose final shapes are obtained by allowing the molten metal to solidify in a mold having the desired final size and shape.

(A) *FRACTURE.* A fracture in aluminum castings shows a bright crystalline structure.

(B) *SPARK TEST.* No sparks are given off.

(3) *CHROMIUM.* Chromium is an alloying agent used in steel, cast iron, and in nonferrous alloys of nickel, copper, aluminum, and cobalt. It is hard, brittle, corrosion resistant, can be welded, machined, forged, and is widely used in electroplating. Chromium is not resistant to hydrochloric acid and it cannot be used in its pure state because of its difficulty to work.

(A) *APPEARANCE.* Chromium is silvery in color.

(B) *FRACTURE.* A fracture in chromium shows a close grained structure.

(C) *SPARK TEST.* Steels containing 1 to 2 percent chromium have no outstanding features in the spark test. Chromium in large amounts shortens the length of the spark stream to half that produced by steel containing no chromium, without appreciably affecting its brightness. Steel containing 14 percent chromium and no nickel produces sparks similar to those given off by low carbon steel, but shorter. An 18 percent chromium, 8 percent nickel stainless steel alloy produces a spark similar to that of wrought iron but only half as long. An 18 percent chromium, 2 percent carbon steel produces a spark similar to carbon tool steel but one third as long.

(4) *COBALT.* Cobalt is used mainly as an alloying element in permanent and soft magnetic materials, high speed tool bits and cutters, high temperature creep resisting alloys, and cemented carbide tool bits and cutters. It is also used in making insoluble paint pigments and blue ceramic glazes. Cobalt can be welded, machined (limited), and cold drawn. It imparts a small volume of short, straight orange streaks during a spark test.

(5) *COPPER.* Copper is ductile, malleable, and has high electrical and heat conductivity. Pure copper is not suitable for welding and is difficult to machine due to its high ductility. It can be forged, cast, and cold worked. Copper alloys can be welded.

(A) *APPEARANCE.* Copper is lustrous, reddish brown metal. It oxidizes to various shades of green.

(B) *FRACTURE.* A fracture in copper has a smooth surface free of crystalline appearance.

(C) *SPARK TEST.* No sparks are given off.

(D) *TORCH TEST.* Copper melts suddenly and solidifies instantly. Alloys will melt and solidify slower than pure copper.

(6) *COPPER ALLOYS.* The two metals most commonly associated as copper alloy's are brass and bronze. Brass has zinc and bronze has tin as the major alloying elements. However, many bronze metals contain more zinc than tin and some contain zinc with no tin at all. Many of the copper alloys may contain amounts of lead, manganese, nickel, or phosphorus as well as zinc or tin.

(A) *BERYLLIUM COPPER.* This alloy contains from 1.5 to 2.75 percent beryllium. It is ductile when soft but loses ductility and gains tensile strength when age hardened.

(B) *NICKEL COPPER.* There are three types of nickel copper alloy available and they contain either 10, 20, or 30 percent nickel. These alloys have moderately high to high tensile strength depending on the nickel content. They are moderately hard, quite tough and ductile. They are very resistant to the erosive and corrosive effects of high velocity sea water, to stress corrosion, and corrosion fatique.

(C) *NICKEL SILVER.* Nickel is added to copper zinc alloys (brasses) to lighten their color; and the resultant alloys are called nickel silver. These alloys are of two general types, one type containing 65 percent or more of copper and nickel combined, the other containing 55 to 60 percent of copper and nickel combined. The first type can be cold worked by such operations as deep drawing, stamping, and spinning. The second type is much harder and is not processed by any of the cold working methods. Gas welding is the preferred process for joining these metals.

(D) *HIGH BRASSES.* High brasses contain from 20 to 45 percent zinc. Tensile strength, hardness, and ductility increase as the percentage of zinc increases. The metals are suitable for both cold and hot working.

(7) *LEAD.* Lead is a heavy, soft, malleable metal having a low melting point, low tensile strength, and low creep strength. It is resistant to corrosion from ordinary atmosphere, moisture, water, and is particularly effective against many acids. Lead is well suited for cold working and casting. The low melting point of lead makes the correct welding rod selection very important.

(A) *APPEARANCE.* Smooth gray white surface when polished, oxidizing to a dull gray.

(B) *FRACTURE.* Smooth white surface when freshly cut which oxidizes quickly to a dull gray.

(C) *SPARK TEST.* No sparks are given off.

(D) *TORCH TEST.* Melts at a low temperature. The molten metal becomes covered with a thin dull slag.

(8) *MAGNESIUM.* Magnesium is an extremely light metal, it is white in color, has a low melting point, excellent machinability, and is weldable. Welding by either the arc or gas process requires the use of a gaseous shield. Magnesium is moderately resistant to atmospheric exposure, many chemicals such as alkalies, chromic and hydrofluoric acids, hydrocarbons, and most alcohols, phenols, esters, and most oils. It is nonmagnetic. Galvanic corrosion is an important factor in any assembly with magnesium.

(A) *APPEARANCE.* Polished surface is silver white but oxidizes rapidly to a grayish film, Magnesium is distinguished from aluminum by the use of a silver nitrate solution. This solution does not affect aluminum but leaves a black deposit of silver on magnesium.

(B) *FRACTURE.* Rough surface with fine grain structure.

(C) *SPARK TEST.* No sparks are given off.

(D) *TORCH TEST.* Magnesium oxidizes rapidly when heated in open air. As a safety precaution magnesium should be melted in an atmosphere of oxygen. When heated in open air it produces an oxide film which is highly insoluble in the liquid metal.

(9) *MANGANESE.* Pure manganese has a relatively high tensile strength but is very brittle. Manganese is used as an alloying agent in steel to deoxidize and desulphurize the metal. In metals other than steel, percentages of 1 to 15 percent manganese will increase the toughness and the hardening ability of the metal involved.

(10) *MOLYBDENUM.* Pure molybdenum has a high tensile strength and is very resistant to heat. It is principally used as an alloying agent in steel to increase strength, hardenability, and resistance to heat.

(11) *NICKEL.* Nickel is a hard, malleable, and ductile metal. As an alloy it will increase ductility, has no effect on grain size, lowers the critical point for heat treatment, aids fatigue strength, and increases impact valves in low temperature operations. Both nickel and nickel alloys are machinable and are readily welded by gas and arc methods.

(A) *APPEARANCE.* Pure nickel has a grayish white color.

(B) *FRACTURE.* Smooth and fine grained.

(C) *SPARK TEST.* Very small amount of short orange streaks which are generally wavy.

(12) *TIN.* Tin is a very soft, malleable, somewhat ductile, corrosion resistant metal having low tensile strength and high crystalline structure. It is used in coating metals to prevent corrosion.

(A) *APPEARANCE.* Silvery-white in color.

(B) *FRACTURE.* Silvery-white and fairly smooth.

(C) *SPARK TEST.* No sparks are given off.

(D) *TORCH TEST.* Tin melts at 450 deg F. and will boil under the torch.

(13) *TITANIUM.* Titanium is a very soft silvery-white medium strength metal having very good corrosion resistance. It has a high strength to weight ratio and its tensile strength increases as the temperature decreases. Titanium has low impact and creep strengths as well as seizing tendencies at temperatures above 800 degrees F.

(14) *TUNGSTEN.* Tungsten is a hard, heavy, nonmagnetic metal which will melt at approximately 6150 deg F. It is used as an alloying agent in nonconsumable welding electrodes, armour plate, die and tool steels, and hard metal carbide cutting tools.

(A) *APPEARANCE.* Steel gray in color.

(B) *SPARK TEST.* A very small volume of short, straight, orange streaks.

(15) *ZINC.* Zinc is a medium low strength metal having a very low melting point. It is easy to machine but coarse grain zinc should be heated to approximately 180 degrees F. to avoid cleavage of crystals. Zinc can be soldered or welded if properly cleaned and heat input is closely controlled.

(A) *APPEARANCE.* Both zinc and zinc alloys are blue white in color when polished. They oxidize to gray.

(B) *FRACTURE.* Appears somewhat granular.

(C) *SPARK TEST.* No sparks are given off.

(D) *TORCH TEST.* Zinc die castings can be recognized by their low melting temperature. The metal boils when heated with the oxyacetylene flame. A die casting, after thorough cleaning, can be welded with a carbuizing flame. Tin or aluminum solders are used as filler metal.

Section II. STANDARD METAL DESIGNATIONS

2–4. General

The numerical index system for the classification of metals and their alloys has been generally adopted by industry for use on drawings and specifications. In this system the class to which the metal belongs, the predominating alloying agent, and the average carbon content in points are indicated.

2–5. Standard Designation System for Steel

a. With only a few exceptions plain steels are steel alloys are identified by a four digit numbering system. The first digit represents the major alloying element. In simple alloy steels the second digit indicates the approximate percentage of the major element. In some metals the second digit indicates a secondary alloying element. The last two digits always indicates the carbon content in points. The points are expressed in hundreths of one percent.

b. The number 2340 by this system indicates a nickel steel with approximately 3 percent nickel and 0.40 percent carbon. The number 4340 indicates a nickel–chrome–molybdenum metal with 0.40 percent carbon.

c. The various classes of steels are identified by numbers as shown in talbe 1.

Table 1. Standard Steel and Steel Alloy Number Designations (Excluding Stainless Steels)

Class	Number
Plain carbon steels	10XX
Free cutting carbon steels	11XX
Manganese steels	13XX
Nickel steels	20XX
Nickel chromium steels[1]	30XX
Molybdenum steels	40XX
Chrome molybdenum steels	41XX

Class	Number
Nickel-chrome-molybdenum steels[1]	43XX, 47XX
Nickel molybdenum steels	46XX, 48XX
Chromium steels[1]	50XX
Chromium vanadium steels	60XX
Heat resisting casting alloys	70XX
Nickel-chrome-molybdenum steels[1]	80XX, 93XX, 98XX
Silicon manganese steels	90XX

[1] Stainless steels always have a high chromium content, often contain considerable amounts of nickel, and sometimes contain molybdenum and other elements. Stainless steels are identified by a three digit number beginning with either 2, 3, 4, or 5.

2–6. Standard Designation System for Aluminum and Aluminum Alloys

a. Currently there is no standard designation system for aluminum castings. Wrought aluminum and aluminum alloys have a standard four digit numbering system. The first digit represents the major alloying element; the second digit identifies alloy modifications (a zero means the original alloy); and the last two digits serve only to identify different aluminum alloys which are in common commercial use, except in the 1XXX class. In the 1XXX class the last two digits indicate the aluminum content above 99 percent, in hundreths of one percent.

b. In number 1017 the 1 indicates a minimum aluminum composition of 99 percent; the 0 indicates it is the original composition; and the 17 indicates the hundredths of one percent of aluminum above the 99 percent minimum composition. In this example the aluminum content is 99.17 percent.

c. In number 3217 the 3 indicaets a manganese–aluminum alloy; the 2 indicates the second modification of this particular alloy; and the 17 indicates a commonly used commercial alloy.

d. The various classes of aluminum and aluminum alloys are identified by numbers as shown in table 2.

Table 2. Standard Aluminum and Aluminum Alloy Number Designations

Major Alloying Element	Number
Aluminum (99% minimum)	1XXX
Copper	2XXX
Manganese	3XXX
Silicon	4XXX
Magnesium	5XXX
Magnesium Silicon	6XXX
Zinc	7XXX
Other element	8XXX
Unused class	9XXX

2–7. Standard Temper Designations for Wrought Aluminum and Magnesium Compositions

a. Most aluminum and aluminum alloys are furnished from the mill in a variety of different tempers. To indicate these various tempers a single letter temper designation system has been devised. The temper designation is added to the basic aluminum designation, the two being separated by a dash; i.e., 3217–H.

b. The various temper designations for wrought aluminum and magnesium compositions are identified by letters as shown in table 3.

Table 3. Standard Wrought Aluminum and Magnesium Compositions Temper Designations

Designations	Temper
F	As fabricated.
O	Annealed.
H	Strain hardened.
H1[1]	Strain hardened only.
H2[1]	Strain hardened, then partially annealed.
H3[1]	Strain hardened, then stablized.
W	Solution heat treated but with an unstable temper.
T	Thermally treated to produce stable tempers, other than F, O, or H.
T2[2]	Annealed (for castings only).
T3[2]	Solution heat treated, then cold worked.
T4[2]	Solution heat treated, then naturally aged.
T5[2]	Artifically aged.
T6[2]	Solution heat treated, then artifically aged.
T7[2]	Solution heat treated, then stabilized.
T8[2]	Solution heat treated, then cold worked, then artifically aged.
T9[2]	Solution heat treated, then artifically aged, then cold worked.
T10[2]	Artifically aged, then cold worked.

[1] When a second number follows these temper designations it indicates the final degree of strain hardening. If the second number is 0 it means annealed; 2 means quarter hard; 4 means half hard; 6 means three quarters hard; and 8 means full hard.

[2] Additional digits may be added to tempers T2 thru T10 to indicate a variation in treatment which significantly alters the characteristics of the particular composition.

2–8. Standard Designation System for Magnesium and Magnesium Alloys

a. Wrought magnesium and magnesium alloys are identified by a combination of letters and numbers. The letters identify which alloying elements were used in the magnesium alloy. See table 4. Numbers, which may follow the letters, designate the percentage of the elements in the magnesium alloy. There may be an additional letter following the percentage designators which indicates the alloy modifications. The letter A means 1; B means 2; C means 3; etc.

b. In the identification number AZ93C the A indicates aluminum; the Z indicates zinc; the 9 indicates there is 9 percent aluminum in the alloy; the 3 indicates there is 3 percent zinc in the alloy; and the C indicates the third modification to the alloy. The first digit, 9 in this example, always indicates the percentage of the first letter, A in this example. The second digit gives the percentage of the second letter.

c. Temper designations may be added to the basic magnesium designation, the two being separated by a dash. The temper designations are the same as those used for aluminum. See table 3.

Table 4. Letters used to Identify Alloying Elements in Magnesium Alloys

Letter	Alloying Element
A	Aluminum
B	Bismuth
C	Copper
D	Cadmium
E	Rare earth
F	Iron
H	Thorium
K	Zirconium
L	Beryllium
M	Manganese
N	Nickel
P	Lead
Q	Silver
R	Chromium
S	Silicon
T	Tin
Z	Zinc

2–9. Standard Designation System for Copper and Copper Alloys

Wrought copper and copper alloys are identified by a three digit number within a range of 100 to 800. See table 5.

Table 5. Standard Copper and Copper Alloy Series Designations

Series	Alloying Element
100	None or very slight amount
200, 300, 400, and 665 to 699	Zinc
500	Tin
600 to 640	Aluminum
700 to 735	Nickel
735 to 799	Nickel and zinc

2–10. Standard Designation System for Titanium

There is no recognized standard designation system for titanium and titanium alloys at this printing. However, these compositions are generally designated by using the chemical symbol for titanium, Ti, followed by the percentage number(s) and the chemical symbol(s) of the alloying element(s). For example, Ti–5 Al–2.5 Sn would indicate that there are 5 percent aluminum and 2–½ percent tin alloying elements in the titanium metal.

Section III. HEAT TREATMENT OF STEEL

2–11. General

a. Heat treatment of steel may be defined as an operation or combination of operations which involves the heating and cooling of the metal in its solid state in order to obtain certain desirable characterists or properties.

b. Alloy steels and plain carbon steels with a carbon content of 0.35 percent or higher can be hardened to the limits attainable for the particular carbon content, or softened as required, by controlling the rate of heating, the rate of cooling, and method of cooling.

c. One of the most important factors in heat treating steels is that the metal should never be heated to a temperature close to its melting point. When this occurs certain elements in the metal are oxidized (burned out), and the steel becomes course and brittle. Steel in this con-

dition usually cannot be restored by any subsequent heat treatment. In general, the lower the carbon content the higher the temperature to which steels can be heated without being oxidized.

2–12. Annealing

a. Annealing is the heating of a metal above the critical temperature and then cooling it by a slow process. The purpose of such heating may be to remove stresses; to induce softness; to alter ductility, toughness, electrical, magnetic, or other physical properties; to refine crystalline structure; to remove gases; or to produce a definite microstructure.

b. Specific heat treatments which fall under the term annealing are:

(1) *FULL ANNEALING.* Heating iron base alloys above the critical temperature range, holding above that range for a proper period of time, followed by cooling in a medium which will prolong the time of cooling.

(2) *PROCESS ANNEALING.* Heating iron base alloys to a temperature below or close to the lower limit of the critical temperature range followed by cooling as desired.

(3) *NORMALIZING.* Heating iron base alloys to approximately 100 deg F. above the critical temperature range followed by cooling to below that range in still air at ordinary temperature.

(4) *PATENTING.* Heating iron base alloys above the critical temperature range followed by cooling below that range in air, in molten lead, or a molten mixture of nitrates or nitrites maintained at a temperature usually between 800 to 105 deg F., depending on the carbon content of the steel and the properties required of the finished product.

(5) *SPHEROIDIZING.* Any process of heating and cooling steel that produces a rounded or globular form of carbide. Methods of spheroidizing generally used are:

(a) Prolonged heating at a temperature just below the lower critical temperature, usually followed by relatively slow cooling.

(b) In the case of small objects of high carbon steels the spheroidizing result is achieved more rapidly by prolonged heating to temperatures alternately within and slightly below the critical temperature range.

(c) Tool steel is generally spheroidized by heating to a temperature of 1.380 to 1,480 deg F. for carbon steels, and higher for many alloy tool steels. The steel is heated from 1 to 4 hours and then cooled slowly in the furnace.

(6) *TEMPERING.* Also called drawing. It is reheating hardened steel to some temperature below the lower critical temperature, followed by any desired rate of cooling.

(7) *MALLEABLIZING.* An annealing operation performed on white cast iron partially or wholly to transform the combined carbon to temper carbon, and in some cases wholly to remove the carbon from the iron by decarburization.

(8) *GRAPHITIZING.* A type of annealing for gray cast iron in which some or all of the combined carbon is transferred to free graphite carbon.

2–13. Hardening

a. Plain carbon steel is hardened by heating it above the critical temperature and cooling it rapidly by plunging it into water, iced brine, or other liquid. When heating through the critical temperature range iron undergoes a transformation and changes from a form with low carbon solubility to one with high carbon solubility. Upon cooling a reverse transformation occurs. Since these changes are progressive and require time for completion, they may be arrested if the cooling period is shortened.

b. If the cooling is very rapid, as in water quenching, the transformation takes place much below the critical temperature range. The carbon is fixed in a highly stressed, finely divided state, the steel becomes hard, brittle, and much stronger than steel that is slowly cooled.

c. The presence of alloying elements alters the rate of transformation on cooling. Each alloy element shows individuality in its effect, therefore, alloy steels are manufactured and heat treated to meet specific performance requirements.

2–14. Tempering

After a steel is hardened it is too brittle for ordinary purposes, therefore, some of the hardness should be removed and toughness in-

duced. This process of reheating quench hardened steel to a temperature below the transformation range and then cooling at any rate desired is called tempering. The metal must be heated uniformly to a predetermined temperature depending on the toughness desired. As the tempering temperature increases, toughness increases, and hardness decreases. The tempering range is usually between 370 and 750 deg F., but sometimes as high as 1,100 deg F.

2–15. Surface Hardening

A low carbon steel cannot be hardened to any great extent because of its low carbon content, yet the surface can be hardened by means of case hardening. The hardening is accomplished by increasing the carbon content of the surface only.

a. *Case Hardening.* This process produces a hard surface resistant to wear but leaves a soft, tough core. It is accomplished as follows:

(1) *PACK CARBURIZING.* The work is placed in a metal container and surrounded by a mixture of carburizing materials. The container is sealed and heated from 1 to 16 hours at 1,700 to 1,800 deg F. The approximate penetration is 0.007 inch per hour. Carburizing is usually followed by quenching to produce a hardened case, (paragraph 2–16, 2–17, and 2–18).

(2) *GAS CARBURIZING.* The work is placed in a gastight retort and heated to 1,700 deg F. Natural or manufactured gas is passed through the retort until proper depth is obtained.

(3) *NITRIDING.* The work is placed in an atmosphere of ammonia gas at 950 deg F., from 10 to 90 hours. The maximum depth of 0.030 inch will be reached at 90 hours. The work is then removed and cooled slowly. Little warpage will result because of the low temperature. The case must then be ground so that it will be corrosion resistant.

(4) *CYANIDING.* The work is preheated and immersed in a cyanide bath at 1,550 deg F. Time of immersion varies from a few minutes to 2 hours with a resulting penetration of 0.010 inch per hour. Parts should be tempered if toughness is desired.

Warning: **Cyanide and cyanide fumes are dangerous poisons, therefore, this process requires expert supervison and adequate ventilation.**

(5) *FORGE CASE HARDENING.* This process, usually used in the field, is accomplished by preheating work in a forge or with a torch to 1,650 deg F., then dipping the work in potassium cyanide or Kasenite and applying the flame until the compound melts. Repeat until required depth is attained and then quench.

b. *Induction Hardening.* This process is accomplished by the use of high frequency current with low voltage and a water spray to quench the work. It is used on high carbon steels only.

c. *Flame Hardening.* This process is accomplished by heating the surface to be hardened with an oxyacetylene torch and quenching it in water. The steel must be high in carbon.

2–16. Use of Carbonizing Compounds, FSN 6685–695–9268, and Isolating Paste, FSN 6850–664–0355, for Surface Hardening

a. *General.* The surface hardness of common steel is directly proportional to its carbon content. Low carbon steels may be given a hard exterior shell by increasing the amount of carbon in their surfaces. If the workpiece to be hardened is packed in a material of high carbon content and then brought to a relatively high temperature, the carbon of the packing material transfers to the surface of the workpiece and hardens it when it is quenched. The hard case thus created by quenching is very brittle and may crack and chip easily. Toughness may be imparted to this brittle case by air cooling, reheating the workpiece to a somewhat lower temperature than that used in the initial hardening, and then quickly quenching it. It is often desired to have only certain parts of a given workpiece hardened while retaining the basic toughness of the steel in the body of the workpiece; for example, the cutting edges of hand tools. This may be accomplished by packing the surfaces to be hardened with the carbonizing material and the balance of the workpiece with an isolating material. Since the material used to pack the workpiece, either

for hardening or for isolation, would dry and peel away in the furnace heat it must be secured to the workpiece by some method of wrapping or shielding.

b. *Preparation of Workpiece.*

(1) *PACKING.*

(a) Remove all rust, scale, and dirt from the workpiece to be hardened.

(b) Firmly press the nontoxic carbonizing paste, FSN 6850–695–9268, on the surfaces or edges to be hardened. The paste should be approximately one half inch thick.

(c) Firmly press the nontoxic isolating paste, FSN 6850–664–0355, over the balance of the workpiece. The paste should be approximately one half inch thick.

(d) If the workpiece temperature is to be recognized by its color, leave a small opening where bare metal can be seen. A similar opening must be provided in the workpiece shielding or wrapping ((2) below).

(e) Whenever possible a suitable pyrometer or temperature measuring instrument must be used on the furnace, as estimating metal temperature by its color is not accurate.

(2) *SHIELDING AND WRAPPING.* Wrap the packed workpiece loosely in a piece of thin sheet iron; or insert it into a piece of tubing of suitable dimension; or if available a metal container about one inch larger than the workpiece can be used. Fill any space between the workpiece and the container with carbonizing paste and/ or isolating paste.

Note: **If a metal container is to be reused it should be made of a heat resistant material such as 18 percent chromium and 8 percent nickel steel, as sheet iron and plain carbon steel will not stand high temperatures for long periods.**

c. *Heating.*

(1) Place the container with the workpiece or the shielded workpiece in a furnace.

(a) If a heat treating furnace is not available heating may be done in a forge or with an acetylene torch. When using the forge keep the work entirely covered with coal, rotating it periodically to insure even temperatures at all times in all areas.

(b) If an acetylene torch is used place the work in a simple muffle jacket of bricks similar to figure 2–1. Care should be taken to keep the temperature as even as possible on all areas. Keep the flame out of contact with the workpiece, or with any one particular portion of it.

(2) The workpiece must be heated to 1,700 deg F. (bright orange). The time to do this depends on the size of the workpiece and the furnace.

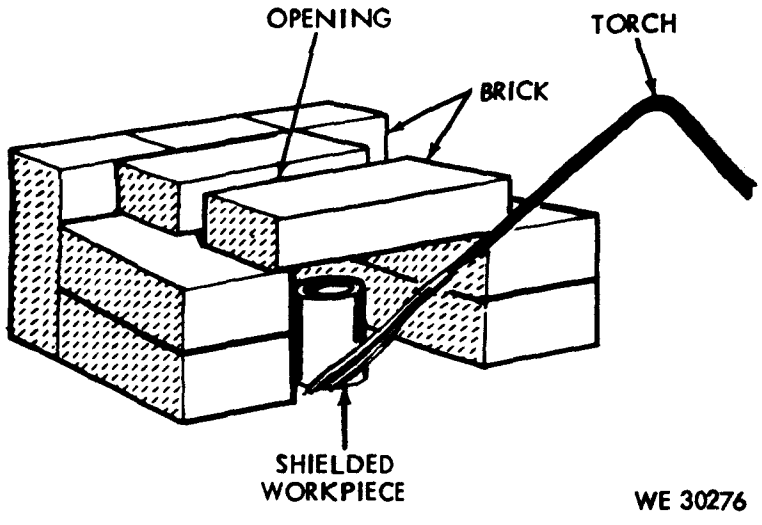

Figure 2–1. Muffle jacket.

(3) Note the time when the workpiece reaches 1,700 deg F. and then hold this heat for the time required to give the desired depth of case hardening. See table 6.

(4) Remove the packed workpiece from the furnace after the required heating time.

(5) The temperatures listed in table 6 are general. They are intended for use with any low carbon steel.

Table 6. Time Required in Case Hardening

Depth of hardened case, in.	Heating time, min.
0.010	5— 7
0.015	10—15
0.030	25—30

2–17. Quenching After Carburizing

After the workpiece has been removed from the furnace or forge remove the shield and packing and allow the workpiece to cool in the air until it reaches 1,450 deg F. Then quench by plunging it in water, or oil is so required by the type of steel alloy. This procedure will not produce as good a grain structure as that shown in paragraph 2–18.

2–18. Drawing and Quenching after Carburizing

a. *Normal Drawing and Quenching.* For better structure in the finished workpiece, heat the workpiece as shown in paragraph 2—16c(1) through (3) and remove it to cool to a black heat without removing the paste or the shield. Reheat the still packed workpiece in a furnace or forge to approximately 1,450 deg F. (orange in furnace) for a few minutes. Then remove it from the heat, remove the shielding and packing and quench by plunging in water, or oil if so required by the type of steel alloy.

b. *Drawing and Quenching SAE Steel.* For the best grain structure in SAE steel workpieces follow the procedure shown in a above, except reheat the SAE steel to the temperature shown in table 7 before quenching. The workpiece is tempered after quenching. This method is generally used when the case hardening penetration is from 0.040 to 0.060–inch.

Table 7. Approximate Reheating Temperatures after Carburizing of SAE Steel

SAE No.	Deg F. (Approx)
1015	1585
1020	1550
1117	1520
1320	1500
3115	1500
3310	1435
4119	1500
4320	1475
4615	1485
4815	1440
8620	1540
8720	1540

2–19. Muffle Jacket

To construct a temporary muffle jacket, figure 2–1, use a sufficient number of fire or refractory bricks to build a box like structure with a floor, three sides and a top. The temporary muffle jacket should be located on a level earth base. The interior cavity should be just large enough to comfortably accommodate the workpiece when wrapped in a shield, and the flame of the heat source. The top of the jacket must provide an opening to act as a chimney. Pack the sides, back, and bottom of the structure with moist earth to help contain the heat. If fire or refractory bricks are not available use common building brick. Make every effort to keep the size of the workpiece such that center supports for the top are not required. If this is not possible use brick for such center supports.

2–20. Heat Source

When using an oxy-acetylene torch for heat, position the torch so that its flame will be completely within the muffle jacket. Do not allow the flame to be in direct contact with any particular portion of the workpiece. Have sufficient fuel available for 2 to 3 hours operation at full flame. After the workpiece has been packed, shielded, and placed in the muffle jacket, ignite the torch, adjust the flame for maximum heat, and use additional brick to close about one half the front opening of the jacket.

CHAPTER 3

WELDING PROCESS

Section I. DESCRIPTION

3–1. General

Welding processes may be broken down into many categories and various methods and materials may be used to accomplish good welding practices. Commonly known methods of welding used in the modern concept of metal fabrication and repair are shown in figure 3–1.

3–2. Arc Welding

In this process the weld is produced by the extreme heat of a electric arc drawn between an electrode and the workpiece, or in some cases between two electrodes. Welds are made with or without application of pressure or with or without filler metals.

a. *Metal Electrodes.*

(1) *BARE METAL ARC–WELDING.* The arc is drawn between a bare or lightly coated electrode and the workpiece. Filler metal is obtained from the electrode and neither shielding nor pressure are used.

(2) *STUD WELDING.* The arc is drawn between a metal stud and the workpiece. The molten surfaces to be jointed are forced together under pressure. No shielding is used.

(3) *INERT–GAS SHIELDED STUD WELDING.* This process is the same as that used for stud welding, (2) above, except that an inert-gas such as argon or helium is used for shielding.

(4) *SUBMERGED ARC–WELDING.* The arc is drawn between an electrode and the workpiece. A granular flux completely surrounds the end of the electrode and shields the entire welding action. Pressure is not used and filler metal is obtained from the electrode.

(5) *INERT–GAS TUNGSTEN–ARC WELDING (TIC).* The arc is drawn between a nonconsumable tungsten electrode and the workpiece. Shielding is obtained from an inert-gas or gas mixture. Pressure and/or filler metal may or may not be used. Operation of typical inert-gas, shielded arc-welding machines are explained in TM 5–3431–211–15 and TM 5–3431–213–15.

(6) *INERT–GAS METAL–ARC WELDING (MIG).* The arc is drawn between a filler metal electrode and the workpiece. Shielding is obtained from an inert–gas, gas mixture, or a mixture of a gas and a flux.

(7) *SHIELDED METAL–ARC WELDING.* The arc is drawn between a covered metal electrode and the workpiece. Shielding is obtained from decomposition of the electrode covering. Pressure is not used and filler metal is obtained from the electrode.

(8) *ATOMIC HYDROGEN WELDING.* The arc is maintained between two metal electrodes in an atmosphere of hydrogen. Pressure and/or filler metal may or may not be used.

(9) *ARC–SPOT WELDING.* A weld is made in one spot by drawing the arc between and electrode and the workpiece. The weld is made without preparing a hole in either member. Filler metal, shielding gas, or flux may or may not be used.

(10) *ARC–SEAM WELDING.* A continuous weld is made along faying surfaces by drawing the arc between an electrode and the workpiece. Filler metal, shielding gas, or flux may or may not be used.

b. *Carbon Electrode.*

(1) *CARBON–ARC WELDING.* The arc is drawn between a carbon electrode and the workpiece. No shielding is used. Pressure and/or filler metal may or may not be used.

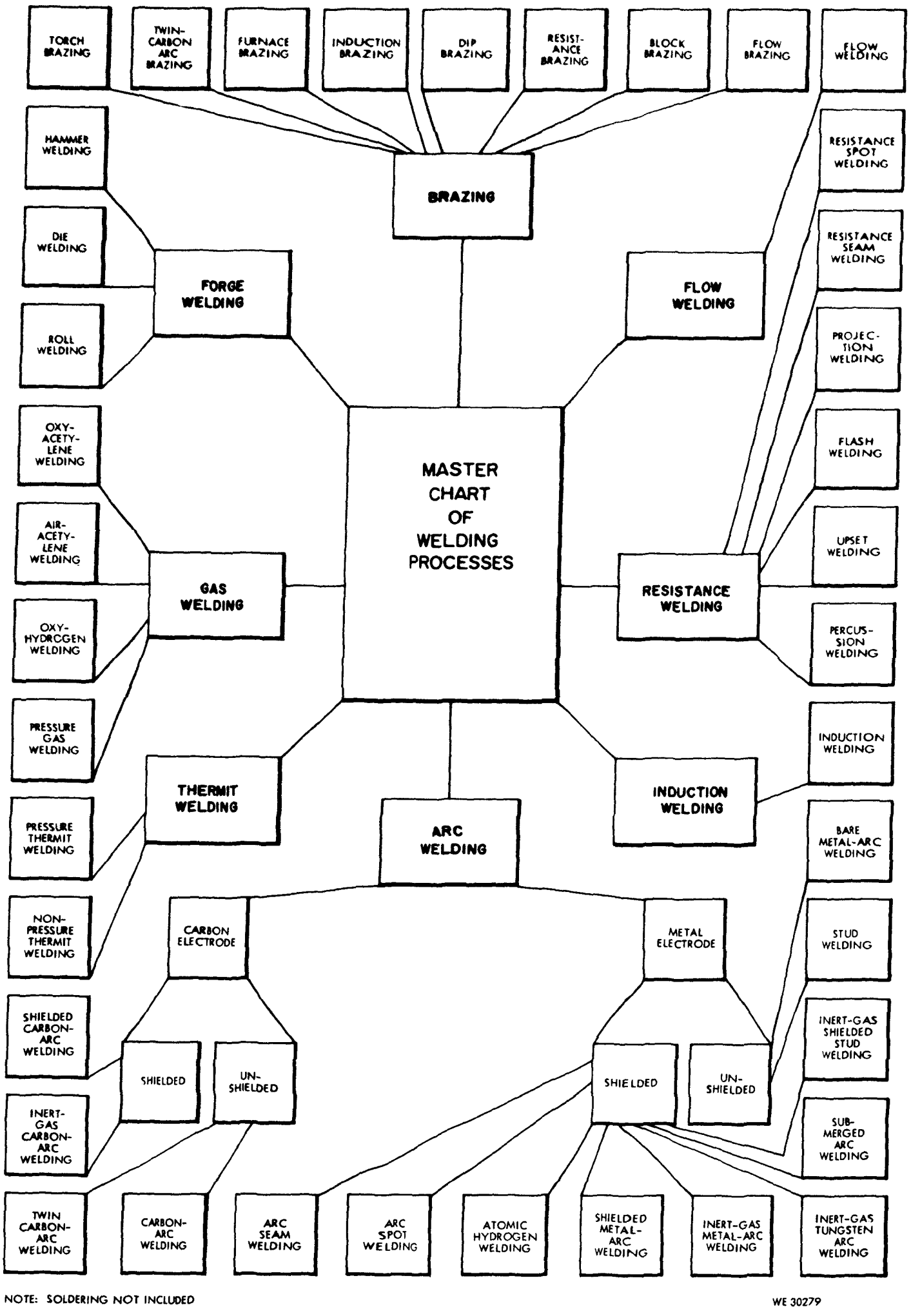

Figure 3–1. Chart of welding processes.

(2) *TWIN CARBON-ARC WELDING.* The arc is drawn between two carbon electrodes. Shielding and pressure are not used. Filler metal may or may not be used.

(3) *INERT-GAS CARBON-ARC WELDING.* The arc is drawn between a carbon electrode and the workpiece. Shielding is obtained from an inert gas or gas mixture. Pressure and/or filler metal may be or may not be used.

(4) *SHIELDED CARBON-ARC WELDING.* The arc is drawn between a carbon electrode and the workpiece. Shielding is obtained from the combustion of a solid material fed into the arc or from a blanket of flux on the work or both. Pressure and/or filler metal may or may not be used.

3–3. Thermit Welding

This is a welding process in which a weld is made by heating with superheated liquid metal and slag resulting from a chemical reaction between a metal oxide and aluminum. Filler metal, when used, is obtained from the liquid metal. Pressure may or may not be used.

a. *Nonpressure Thermit Welding.* In this thermit welding process no pressure is used and the filler metal is obtained from the liquid metal.

b. *Pressure Thermit Welding.* In this thermit welding process pressure is used and the liquid metal is not used as a filler metal.

3–4. Gas Welding

This is a group of welding processes in which a weld is made by heating with a gas flame or flames. Pressure and/or filler metal may or may not be used.

a. *Pressure Gas Welding.* A process in which a weld is made, simultaneously over the entire area of abutting surfaces, by heating with gas flames obtained from the combustion of a fuel gas with oxygen and by the application of pressure. No filler metal is used.

b. *Oxy-Hydrogen Welding.* A process in which the heat is obtained from the combustion of hydrogen with oxygen. No pressure is used and filler metal may or may not be used.

c. *Air-Acetylene Welding.* A process in which the heat is obtained from the combustion of acetylene with air. No pressure is used and filler metal may or may not be used.

d. *Oxy-Acetylene Welding.* A process in which the heat is obtained from the combustion of acetylene with oxygen. Pressure and/or filler metal may or may not be used.

3–5. Forge Welding

This is a group of welding processes in which a weld is made by heating in a forge or other furnace and by applying pressure or blows.

a. *Roll Welding.* A process in which heat is obtained from a furnace and rolls are used to apply pressure.

b. *Die Welding.* A process in which heat is obtained from a furnace and dies are used to apply pressure.

c. *Hammer Welding.* A process in which heat is obtained from a forge or furnace and hammer blows are used to apply pressure.

3–6. Brazing

A group of welding processes in which the filler metal is a nonferrous metal or alloy with a melting point above 800 deg F., but lower than that of the metals to be joined. The filler metal is distributed between the closely fitted surfaces of the joint by capillary attraction.

a. *Torch Brazing.* A process in which a gas flame produces the necessary heat.

b. *Twin-Carbon-Arc Brazing.* A process in which an arc is maintained between two carbon electrodes to produce the necessary heat.

c. *Furnace Brazing.* A process in which a furnace produces the necessary heat.

d. *Induction Brazing.* A process in which heat is obtained from resistance of the work to the flow of induced electric current.

e. *Dip Brazing.* A process in which heat is obtained in a molten chemical or metal bath. The bath provides the filler metal.

f. *Resistance Brazing.* A process in which heat is obtained from resistance to the flow of electric current in a circuit of which the work is a part.

g. *Block Brazing.* A process in which heat is obtained from heated blocks applied to the part to be joined.

h. *Flow Brazing.* A process in which heat is obtained from molten nonferrous filler metal

poured over the joint until the brazing temperature is attained.

3–7. Flow Welding

This is a welding process in which molten filler metal is poured over the surfaces to be welded until the welding temperature has been attained, and the required filler metal has been added. The filler metal is not distributed in the joint by capillary attraction.

3–8. Resistance Welding

This is a welding process in which a weld is made by heat obtained from resistance of the work to the flow of an electric current in a circuit of which the work is a part and by the application of pressure.

a. *Resistance-Spot Welding.* The size and shape of the individually formed welds are limited primarily by the size and contour of the electrodes. The electrodes apply pressure.

b. *Resistance-Seam Welding.* This weld is a series of overlapping spot welds made progressively along a joint by rotating the circular electrodes. The electrodes apply pressure.

c. *Projection Welding.* These welds are localized at predetermined points by the design of the parts to be welded. The localization is usually accomplished by projections, embossments or intersections. The electrodes apply pressure.

d. *Flash Welding.* This weld is made simultaneously over the entire area of abutting surfaces by the application of pressure after the heating is substantially completed. Flashing is accompanied by expulsion of metal from the joint.

e. *Upset Welding.* This weld is made simultaneously over the entire area of abutting surfaces or progressively along a joint. Pressure is applied before heating is started and is maintained throughout the heating period.

f. *Percussion Welding.* This weld is made simultaneously over the entire area of abutting surfaces by the heat obtained from an arc. The arc is produced by a rapid discharge of electrical energy. It is extinguished by pressure percussively applied during the discharge.

3–9. Induction Welding

A welding process in which a weld is made by the heat obtained from resistance of the work to the flow of induced electric current. with or without the application of pressure.

Section II. NOMENCLATURE OF THE WELD

3–10. General

Common terms used to describe the various facets of the weld are explained below and are illustrated in figure 3–2.

3–11. Section of a Weld

a. *Fusion Zone (Filler Penetration).* The area of base metal melted as determined in the cross section of a weld.

b. *Leg of a Fillet Weld.* The distance from the root of the joint to the toe of the fillet weld. There are two legs in a fillet weld.

c. *Root of the Weld.* The point at which the bottom of the weld intersects the base metal surface, as shown in the cross section of a weld.

d. *Size of the Weld.*

(1) *EQUAL LEG-LENGTH FILLET WELDS.* The size of the weld is designated by the leg-length of the largest isosceles right triangle that can be inscribed within the fillet weld cross section.

(2) *UNEQUAL LEG-LENGTH FILLET WELDS.* The size of the weld is designated by the leg-length of the largest right triangle that can be inscribed within the fillet weld cross section.

(3) *GROOVE WELD.* The size of the weld is the joint penetration, that is, the depth of chamfering plus the root penetration when specified.

e. *Throat of a Fillet Weld.*

(1) *THEORETICAL THROAT.* This is the perpendicular distance between the hypotenuse of the largest right triangle that can be inscribed within the fillet weld cross section and the beginning of the root of the weld.

(2) *ACTUAL THROAT.* This is the shortest distance from the root of a fillet weld to its face.

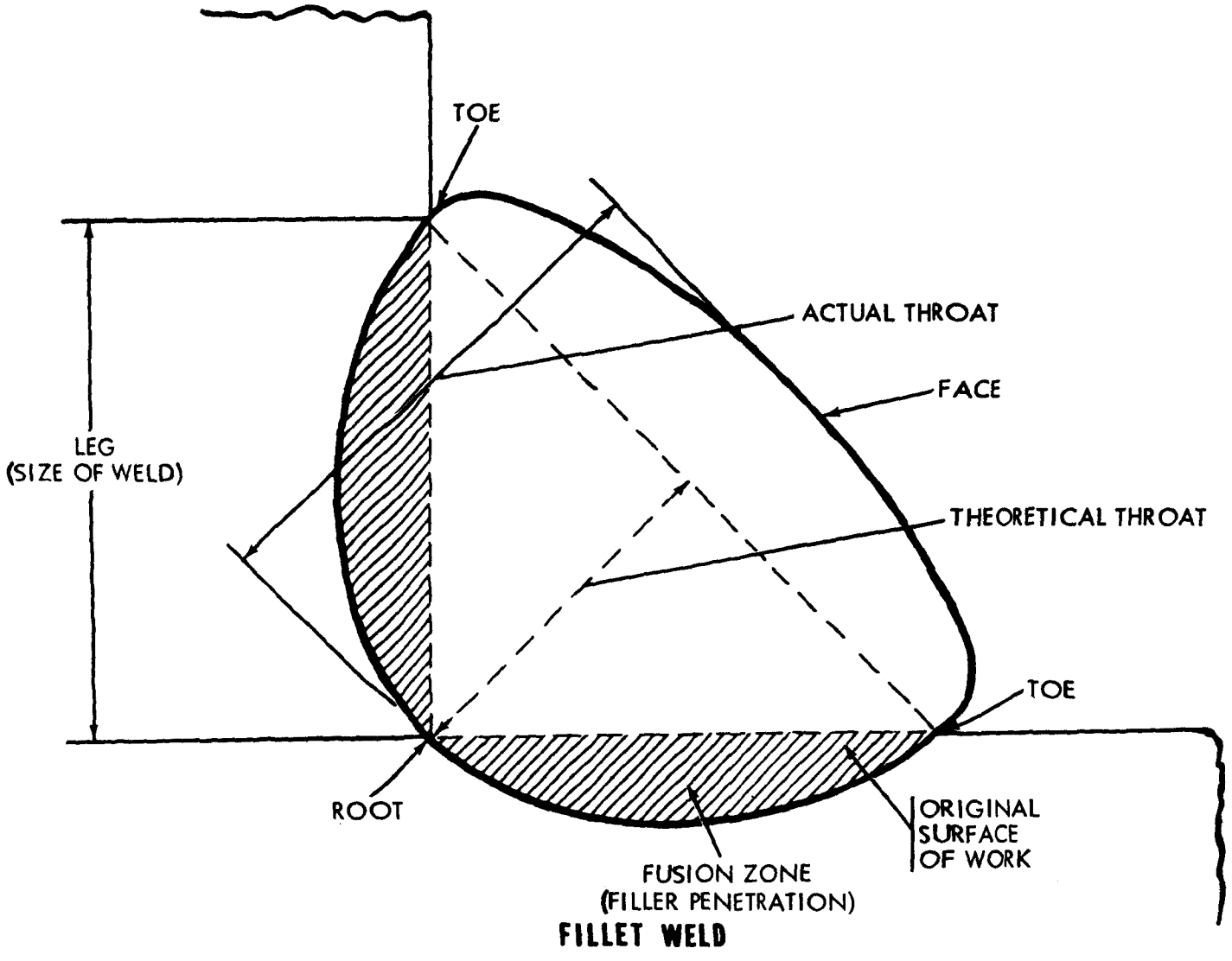

Figure 3–2. Nomenclature of welds.

f. *Face of the Weld.* This is the exposed surface of the weld, made by an arc or gas welding process, on the side from which the welding was done.

g. *Toe of the Weld.* This is the junction between the face of the weld and the base metal.

h. *Reinforcement of the Weld.* This is the weld metal on the face of a groove weld in excess of the metal necessary for the specified weld size.

3–12. Multipass Welds

a. The nomenclature of the weld, the zones affected by the welding heat when a butt weld is made by more than one pass or layer, and the nomenclature applying to the grooves used in butt welding are shown in figure 3–3.

b. The primary heat zone is the area fused or affected by heat in the first pass or application of weld metal. The secondary heat zone is the area affected in the second pass and overlaps the primary heat zones. That portion of the base metal that hardens or changes its properties as a result of the welding heat in the primary zone is partly annealed or softened by the welding heat in the secondary zone. The weld metal in the first layer is also refined in structure by the welding heat of the second layer. The two heating conditions are important in determining the order or sequence in depositing weld metal in a particular joint design.

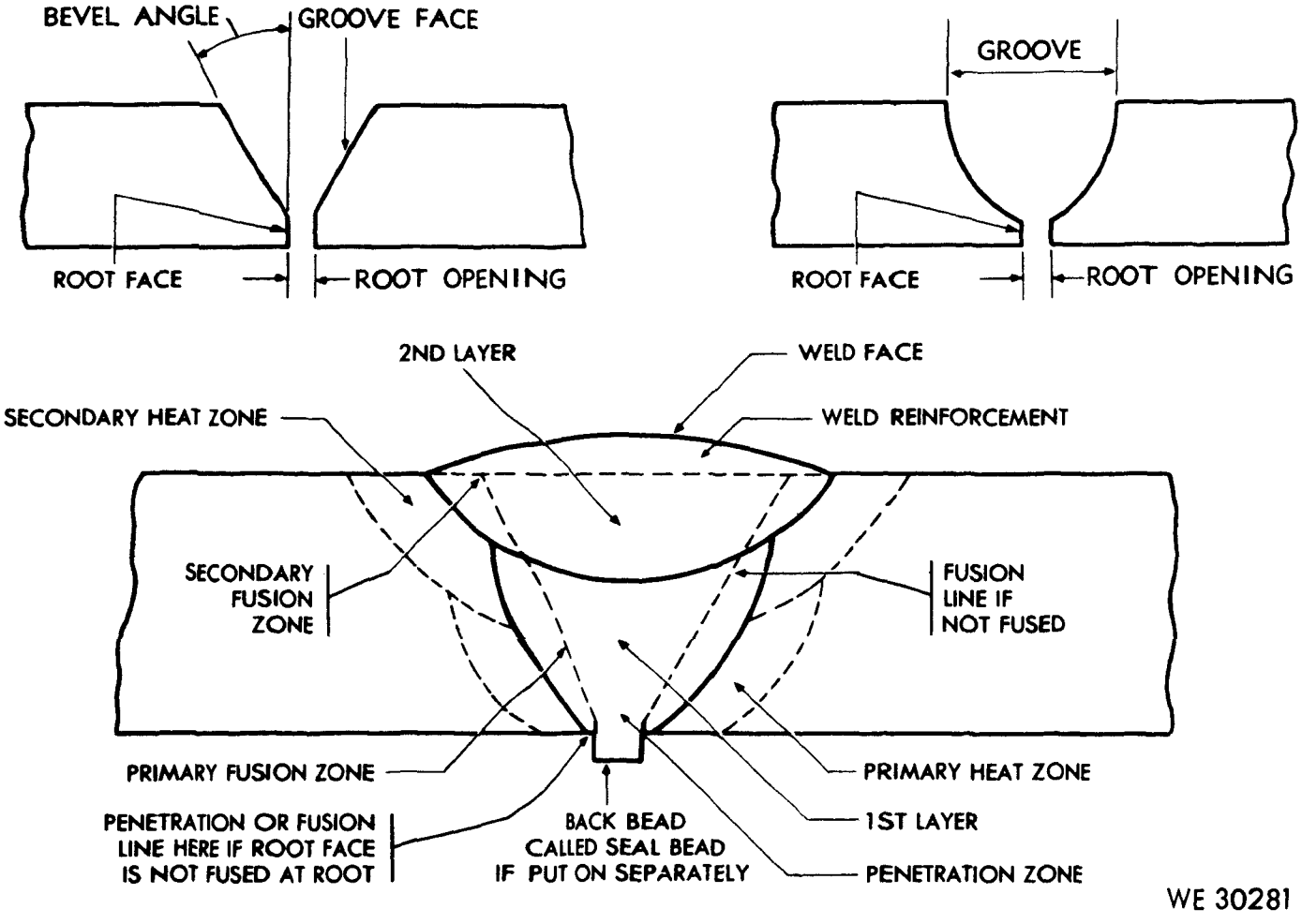

Figure 3–3. Heat affected zones in a multipass weld.

Section III. TYPE OF WELDS AND WELDED JOINTS

3–13. General

a. The properties of a welded joint depend partly on the correct preparation of the edges being welded. All mill scale, rust, oxides, and other impurities must be removed from the joint edges or surfaces to prevent their inclusion in the weld metal. The edges should be prepared to permit fusion without excessive

melting, and care should be taken to keep to a minimum the heat loss due to radiation into the base metal from the weld. A properly prepared joint will give a minimum of expansion on heating and contraction on cooling.

b. The preparation of the metal for welding is governed by the form, thickness, kind of metal, the load which the weld will be required to support, and the available means for preparing the edges to be joined.

c. Five basic types of joints are used to weld various forms of metal. These are butt, lap, tee, corner, and edge joints.

3–14. Butt Joint

a. This type of joint is used to join the edges of two plates or surfaces located approximately in the same plane. Plain square butt joints on light section are shown in figure 3–4. Butt joints with several types of edge preparation are shown in figure 3–5. These edges can be prepared by flame cutting, shearing, flame grooving, machining, chipping, or grinding. The edge surfaces in each case must be free of oxides, scale, dirt, grease, or other foreign matter.

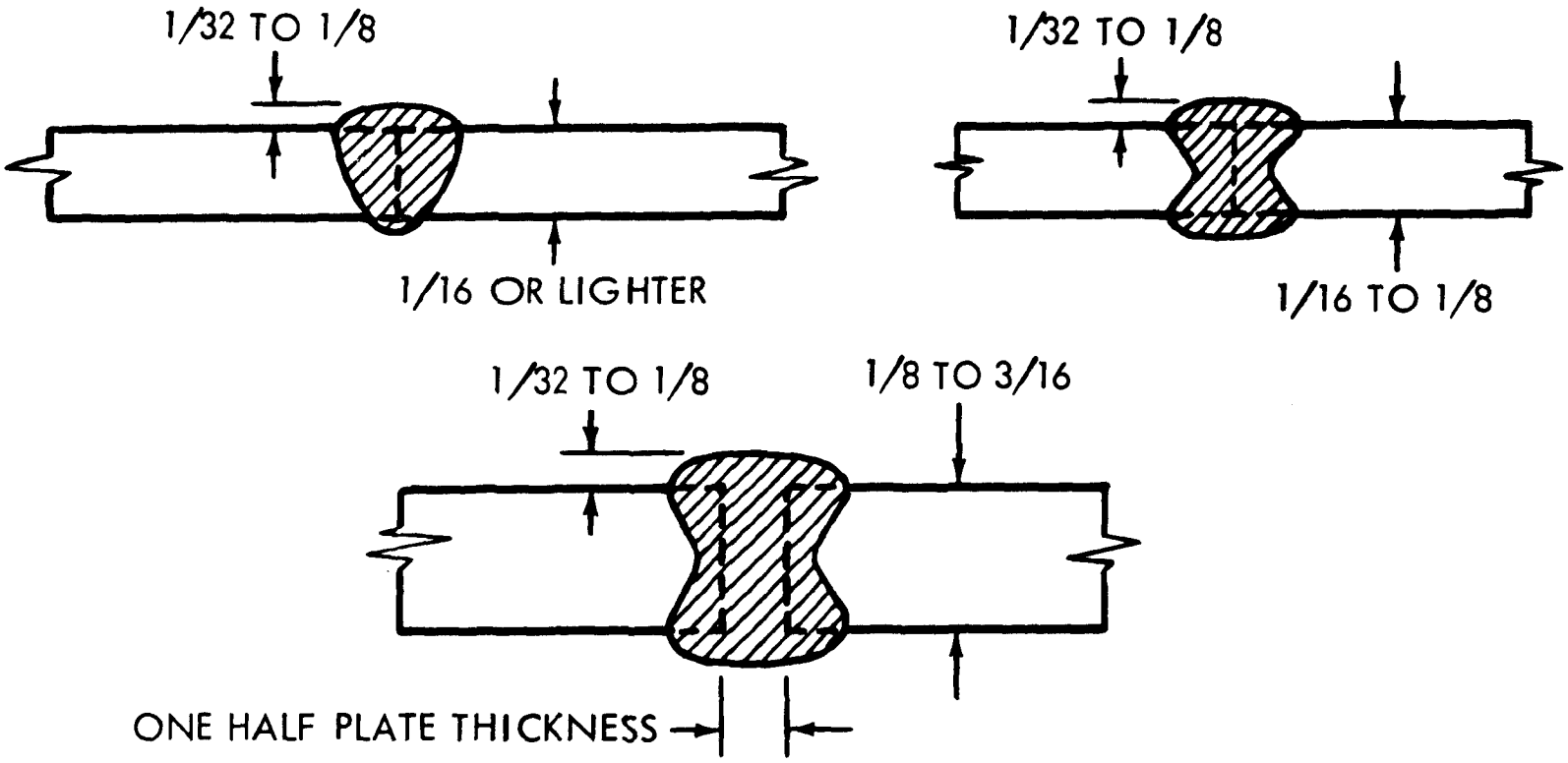

Figure 3–4. Butt joints, light sections.

b. The joints shown in fig. 3–4 are used for butt welding light sheet metal. Plate thickness of ⅜ to ½–inch can be welded using the single V or single U joints, as shown at A and C, fig. 3–5. The edges of heavier sections should be prepared as shown at B and D, figure 3–5. The single U groove (C, fig. 3–5) is more satisfactory and requires less filler metal than the single V groove when welding heavy sections and when welding in deep grooves. The double V groove joint requires approximately one-half the amount of filler metal used to produce the single V groove joint for the same plate thickness. In general, butt joints prepared from both sides permit easier welding, produce less distortion, and insure better weld metal qualities in heavy sections than joints prepared from one side only. For information on joint preparation for armor plate, see chapter 9.

3–15. Corner Joint

a. This type of joint is used to join two members located approximately at right angles to each other in the form of an L. The fillet

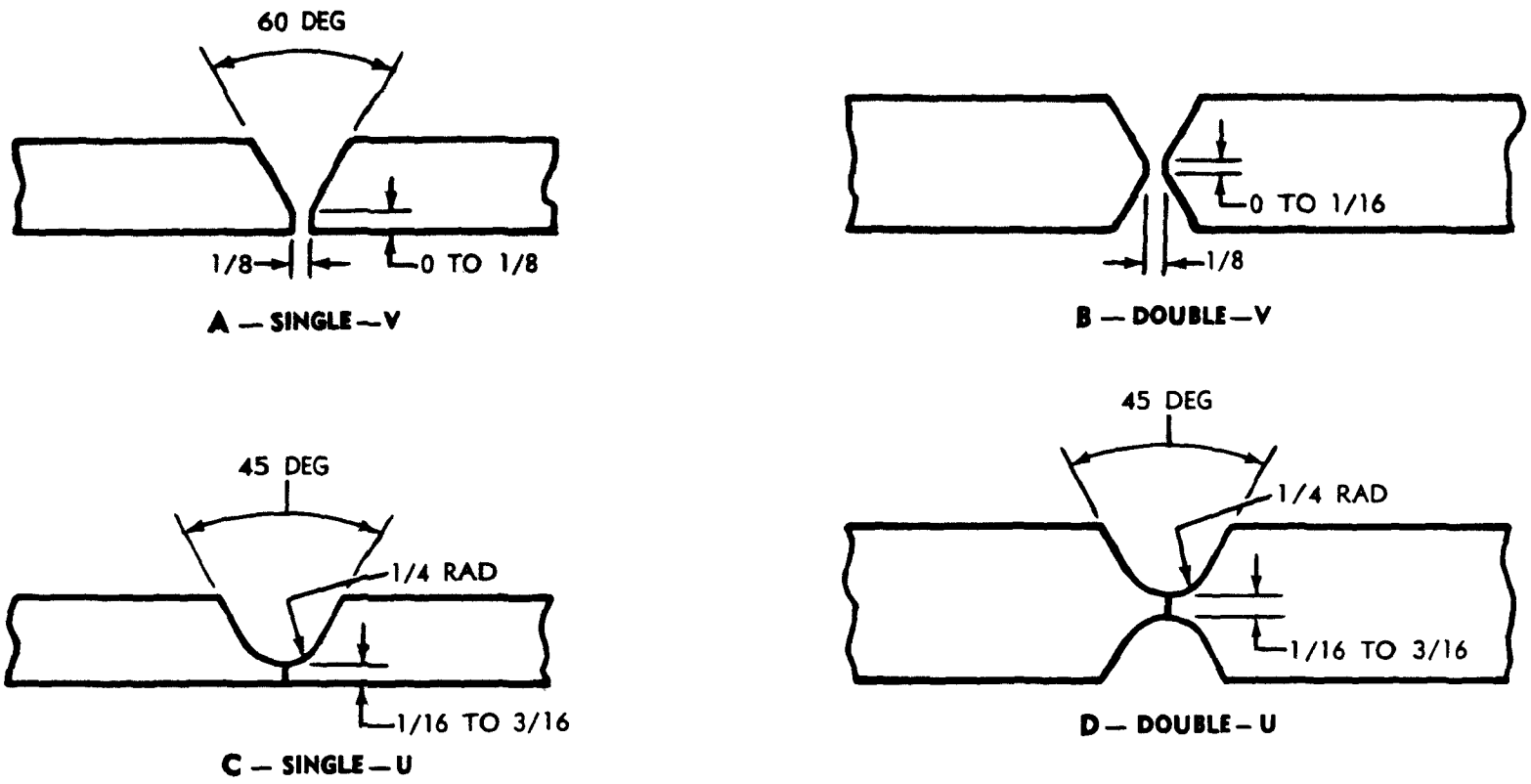

Figure 3–5. Butt joints, heavy sections.

weld corner joint (A, fig. 3–6) is used in the construction of boxes, box frames, tanks, and similar fabrications.

b. The closed type joint (B, fig. 3–6) is used on lighter sheets when high strength is not required at the joint. In making the joint by oxyacetylene welding the overlapping edge is melted down, and little or no filler metal is added. In arc welding only a very light bead is required to make the joint. When the closed type joint is used for heavy sections the lapped plate is V beveled or U grooved to permit penetration to the root of the joint.

c. The open type corner joint (C, fig. 3–6) is used on heavier sheets and plates. The two edges are melted down and filler metal is added to fill up the corner.

d. Corner joints on heavy plates are welded from both sides as shown at D, fig. 3–6. The joint is first welded from the outside, then reinforced from the back side with a seal bead.

3–16. Edge Joint

a. This type of joint is used to join two or more parallel or nearly parallel members. It is not very strong and is used to join edges of sheet metal, reinforcing plates in flanges of I beams, edges of angles, mufflers, tanks for liquids, housing, etc. Two parallel plates are joined together as shown at A, fig. 3–7. On heavy plates sufficient filler metal is added to fuse or melt each plate edge completely and to reinforce the joint.

b. Light sheets are welded as shown at B, figure 3–7. No preparation is necessary other than to clean the edges and tack weld them in position. The edges are fused together so no filler metal is required. The heavy plate joint as shown at C, figure 3–7 requires that the edges be beveled in order to secure good penetration and fusion of the side walls. Filler metal is used in this joint.

3–17. Lap Joint

This type of joint is used to join two overlapping members. A single-lap joint where welding must be done from one side is shown at A, figure 3–8. The double lap joint is welded on both sides and develops the full strength of the welded members (B, fig. 38). An offset lap joint (C, fig. 3–8) is used where two overlapping plates must be joined and welded in the

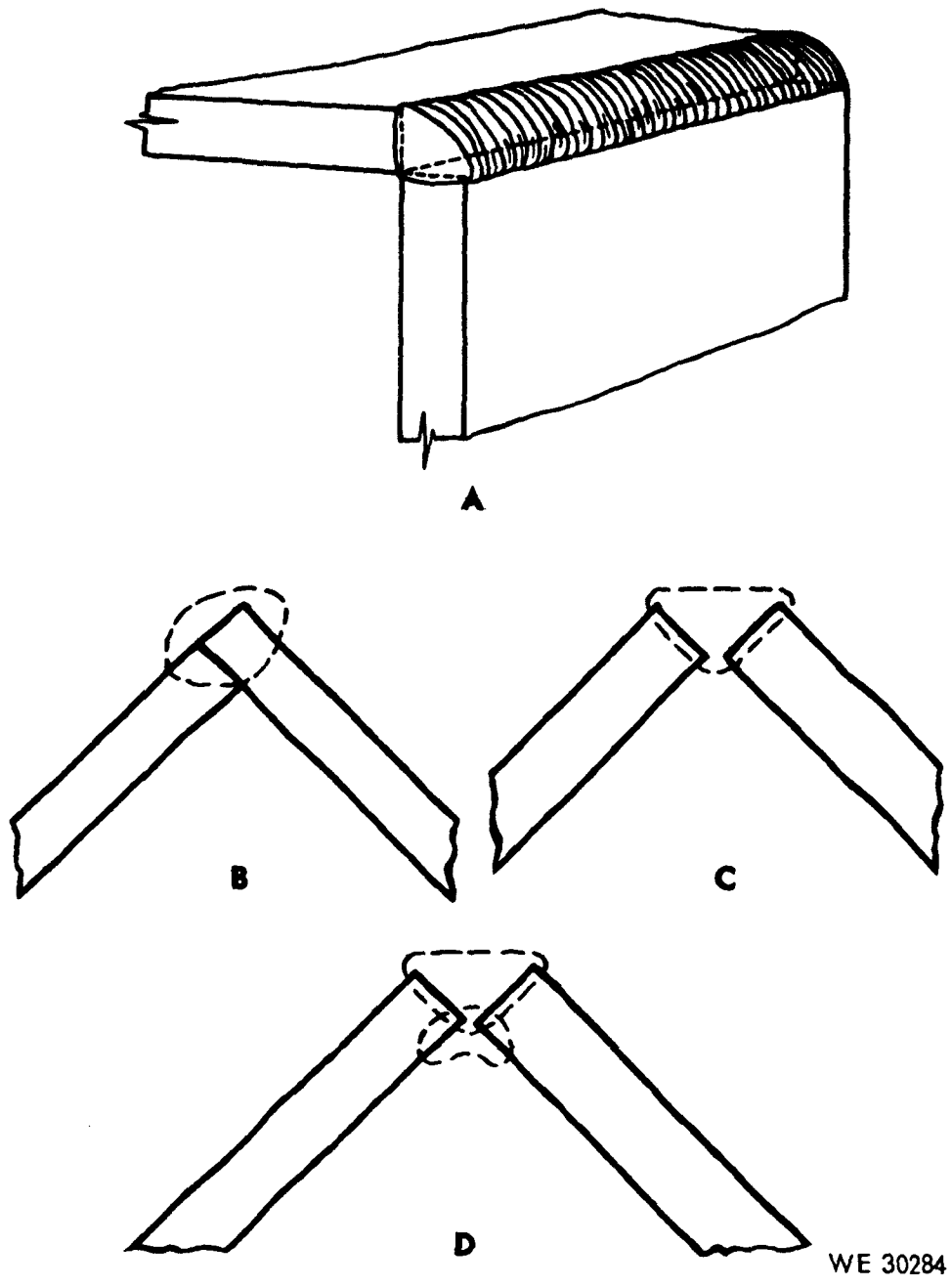

Figure 3–6. Corner joints for sheets and plates.

same plane. This type of joint is stronger than the single lap type, but is more difficult to prepare.

3–18. Tee Joint

a. The joints are used to weld two plates or sections whose surfaces are located approximately 90 deg to each other at the joint, but the surface on one plate or section is not in the same plane as the end of the other surface. A plain tee joint welded from both sides as shown at B, figure 3–9. The included angle of bevel in the preparation of tee joints is approximately half that required for butt joints.

b. Other edge preparations used in tee joints are shown in fig. 3–10. A plain tee joint, which requires no preparation other than cleaning the end of the vertical plate and the surface of the horizontal plate, is shown at A, figure 3–10. The single beveled type joint (B, fig. 3–10) is used in plates and sections up to ½ inch thick. The double bevel tee (C, fig. 3–10) is used on heavy plates that can be welded from both sides. The single J joint (D, fig. 3–10) is used for welding plates 1 inch thick or heavier where welding is done from one side. The double J type (E, fig. 3–10) is used for welding very heavy plates from both sides.

c. Care must be taken to insure penetration into the root of the weld. This penetration is promoted by root openings between the ends of

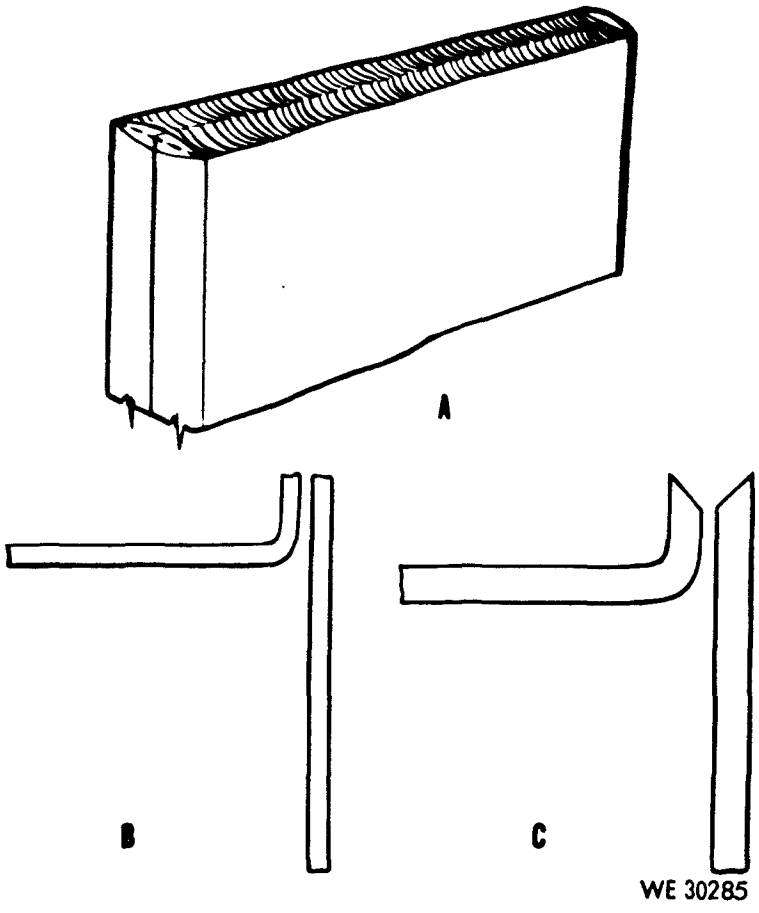

Figure 3–7. Edge joints for light sheets and plates.

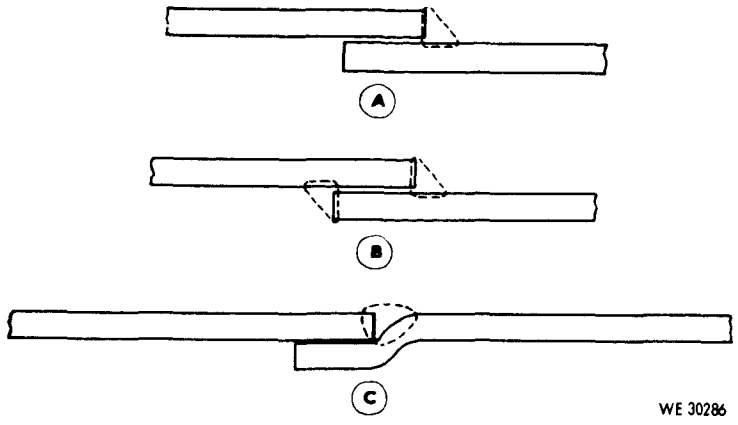

Figure 3–8. Lap joints.

the vertical members and the horizontal surfaces.

3–19. Type of Welds

The type of weld used will determine the manner in which the seam, joint, or surface is prepared.

a. *Groove Weld.* These are welds made in a groove between two members to be joined. See figure 3–11 for the standard types of groove welds.

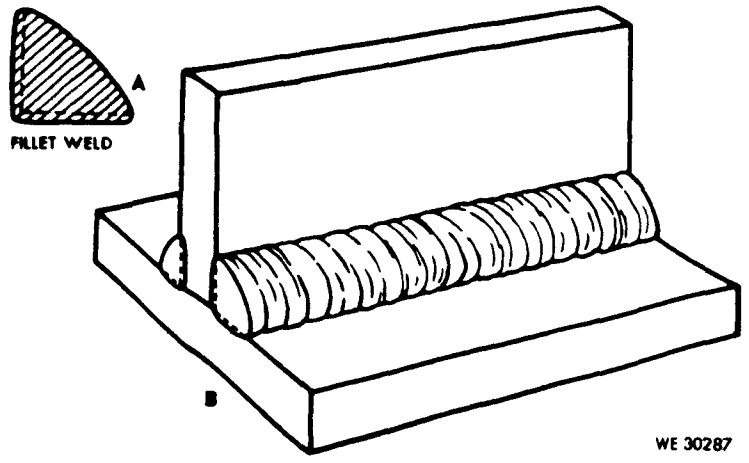

Figure 3–9. Tee joint-single pass, fillet weld.

b. *Surfacing Weld* (fig. 3–12). A weld composed of one or more string or weave beads deposited on an unbroken surface to obtain desired properties or dimensions.

c. *Plug Weld* (fig. 3–12). A circular weld made through one member of a lap or tee joint joining that member to the other. The weld may or may not be made through a hole in the first member; if a hole is used the walls may or may not be parallel and the hole may be partially or completely filled with weld metal.

Note. **A fillet welded hole or a spot weld does not conform to this definition.**

d. *Slot Weld* (fig. 3–12). This is a weld made in an elongated hole in one member of a lap or tee joint joining that member to the surface of the other member that is exposed through the hole. This hole may be open at one end and may be partially or completely filled with weld metal.

Note. **A fillet welded slot does not conform to this definition.**

e. *Fillet Weld* (A, fig. 3–9). This is a weld of approximately triangular cross section joining two surfaces approximately at right angles to each other in a lap joint, corner joint, or tee joint.

f. *Flash Weld* (fig. 3–13). A weld made by flash welding (par. 3–7d).

g. *Seam Weld* (fig. 3–13). A weld made by arc-seam or resistance-seam welding (par. 3–2a(10) and 3–8b). Where the welding process is not specified this term infers resistance-seam welding.

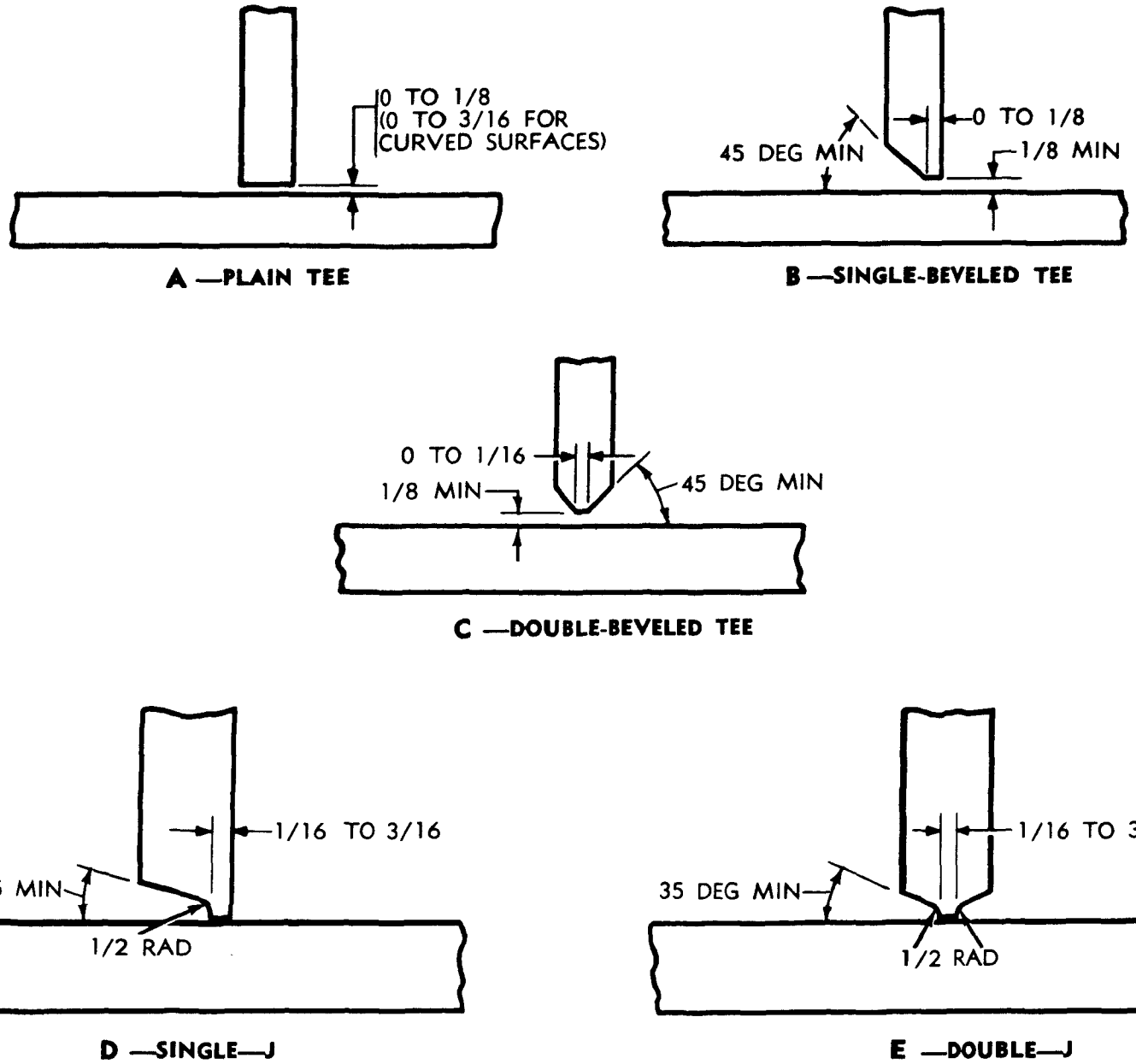

Figure 3–10. Preparation of edges.

h. *Spot Weld* (fig. 3–13). A weld made by arc-spot or resistance spot welding (par 3–2a (9) and 3–8a). Where the welding process is not specified this term infers a resistance-spot weld.

i. *Upset Weld* (fig. 3–13). A weld made by upset welding (par. 3–8e).

Section IV. POSITION OF WELDS

3–20. General

All welding can be classified according to the position of the plate or welded joint on the plates or sections being welded. There are four general positions in which welds are required to be made. These are designated as flat, vertical, horizontal, and overhead positions as shown in figure 3–14. Fillet or groove welds may be made in all of these positions.

3–21. Welding Positions

a. *Flat Position.* In this position the welding is performed from the upper side of the joint and the face of the weld is approximately horizontal.

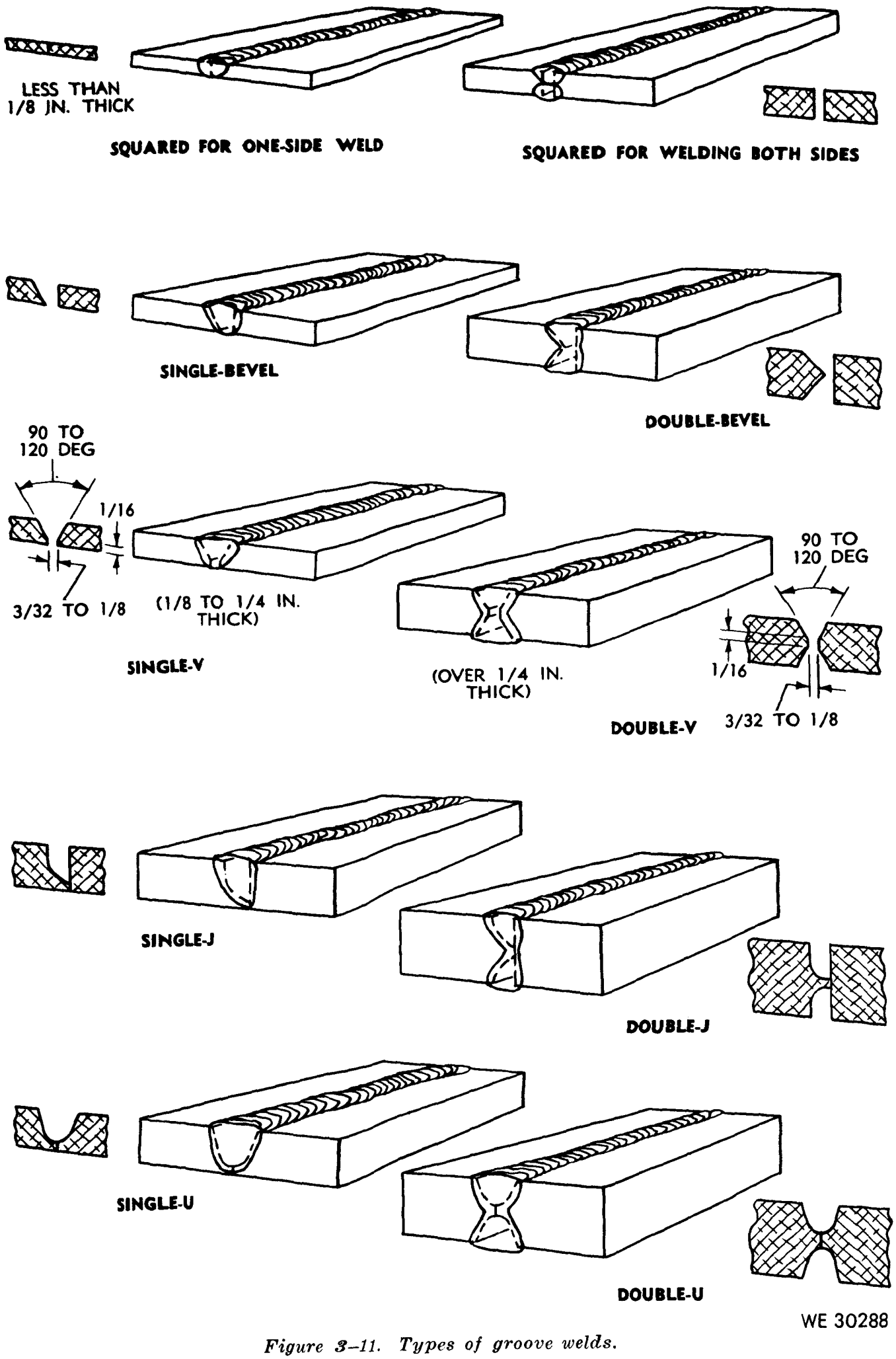

Figure 3–11. Types of groove welds.

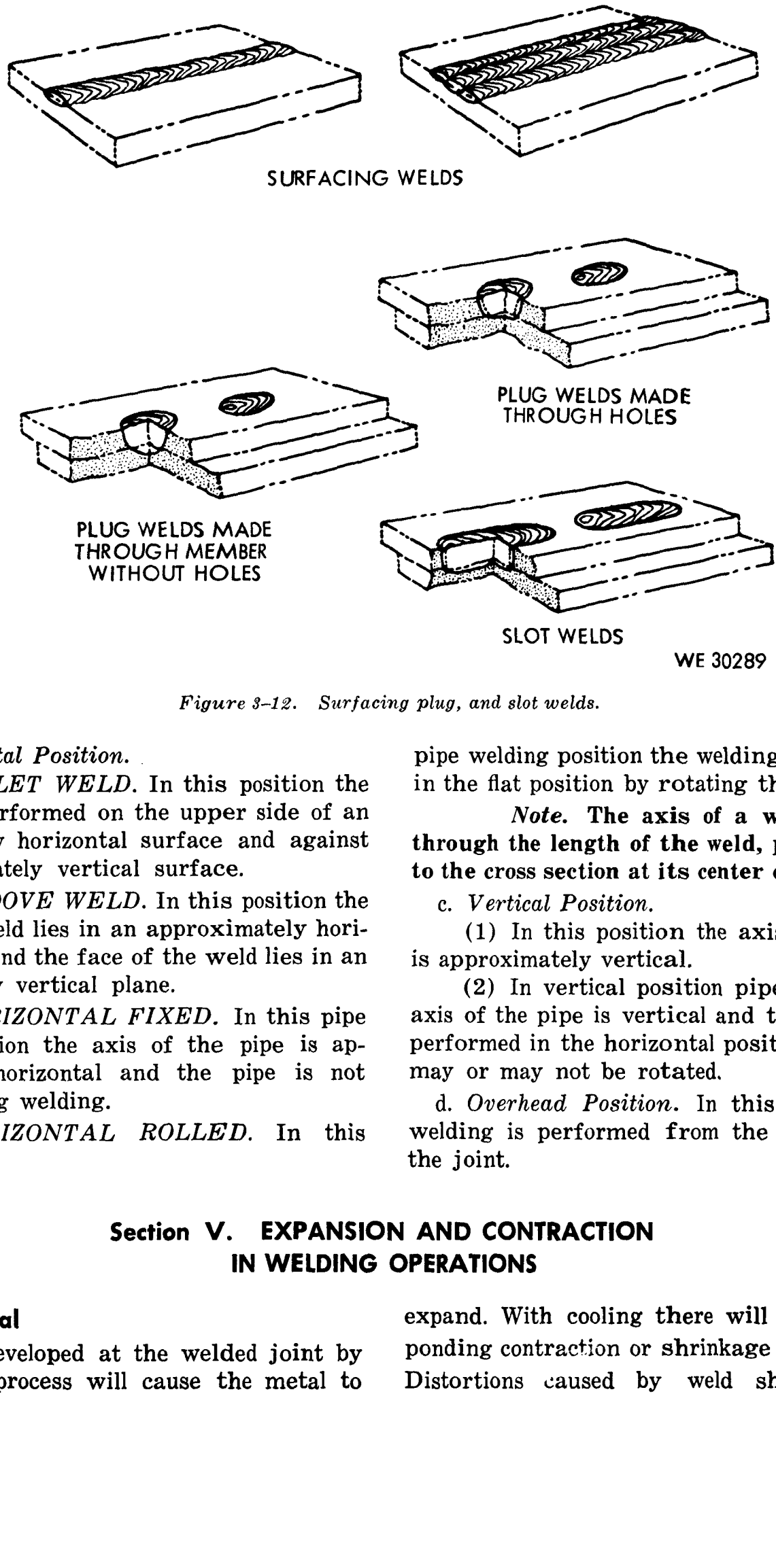

Figure 3–12. Surfacing plug, and slot welds.

b. *Horizontal Position.*

(1) *FILLET WELD.* In this position the welding is performed on the upper side of an approximately horizontal surface and against an approximately vertical surface.

(2) *GROOVE WELD.* In this position the axis of the weld lies in an approximately horizontal plane and the face of the weld lies in an approximately vertical plane.

(3) *HORIZONTAL FIXED.* In this pipe welding position the axis of the pipe is approximately horizontal and the pipe is not rotated during welding.

(4) *HORIZONTAL ROLLED.* In this pipe welding position the welding is performed in the flat position by rotating the pipe.

Note. **The axis of a weld is a line through the length of the weld, perpendicular to the cross section at its center of gravity.**

c. *Vertical Position.*

(1) In this position the axis of the weld is approximately vertical.

(2) In vertical position pipe welding the axis of the pipe is vertical and the welding is performed in the horizontal position. The pipe may or may not be rotated.

d. *Overhead Position.* In this position the welding is performed from the underside of the joint.

Section V. EXPANSION AND CONTRACTION IN WELDING OPERATIONS

3–22. General

The heat developed at the welded joint by any welding process will cause the metal to expand. With cooling there will be a corresponding contraction or shrinkage of the metal. Distortions caused by weld shrinkage are

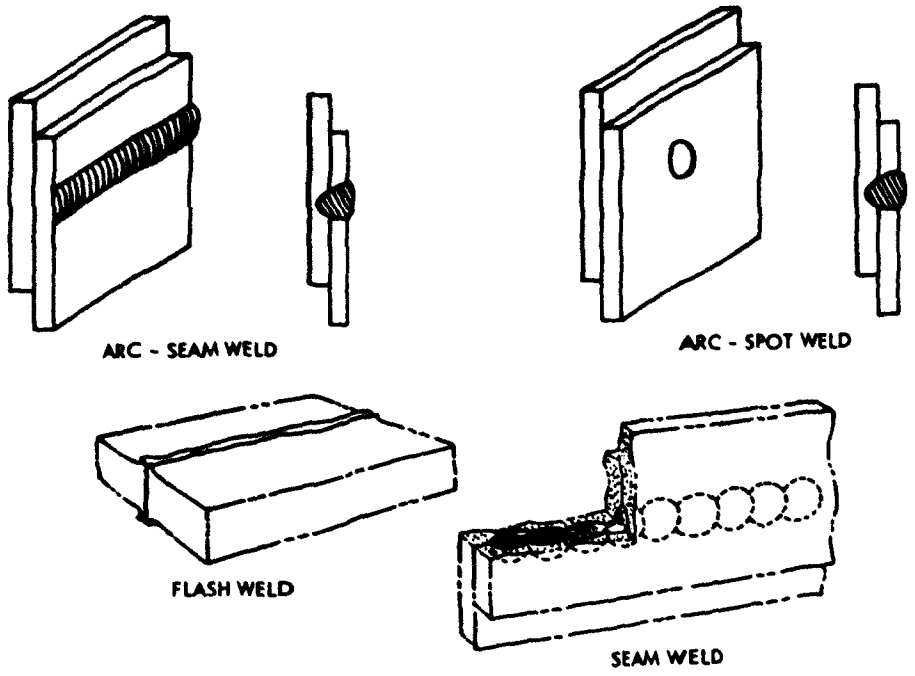

Figure 3–13. Flash, seam, spot, and upset welds.

in figure 3–15. If the expansion of the part being welded is restrained buckling or warping may occur as a result of the expansion stresses. If contraction is restrained the parts may be cracked or distorted because of the shrinkage stresses.

3–23. Controlling Contraction in Sheet Metal

The welding procedure should be so devised that contraction stresses will be held to a minimum in order to keep the desired shape and strength of the welded part. Some of the methods used for controlling contraction are described below.

a. The back step method as shown in A, fig. 3–16, may be used.

b. In welding long seams the contraction of the metal deposited at the joint will cause the edges being welded to draw together and possibly overlap. This action should be offset by wedging the edges apart as shown in B, fig. 3–16. The wedge should be moved forward as the weld progresses. The spacing by the wedge depends on the type of metal and its thickness. Spacing for metals more than ⅛-inch thick is approximately as follows:

Metal	*Inches per foot*
Steel	¼ to 3/8
Brass and bronze	3/16
Aluminum	¼
Copper	3/16
Lead	5/16

c. Sheet metal under 1/16–inch thick may be welded by flanging the edges as shown in fig. 3–7 and tacking at intervals along the seam before welding. A weld can be produced in this manner without the addition of filler metal.

d. Buckling and warping can be prevented by the use of quench plates as hown in figure 3–17. The quench plates are heavy pieces of metal clamped parallel to the seam being welded with sufficient space between to permit

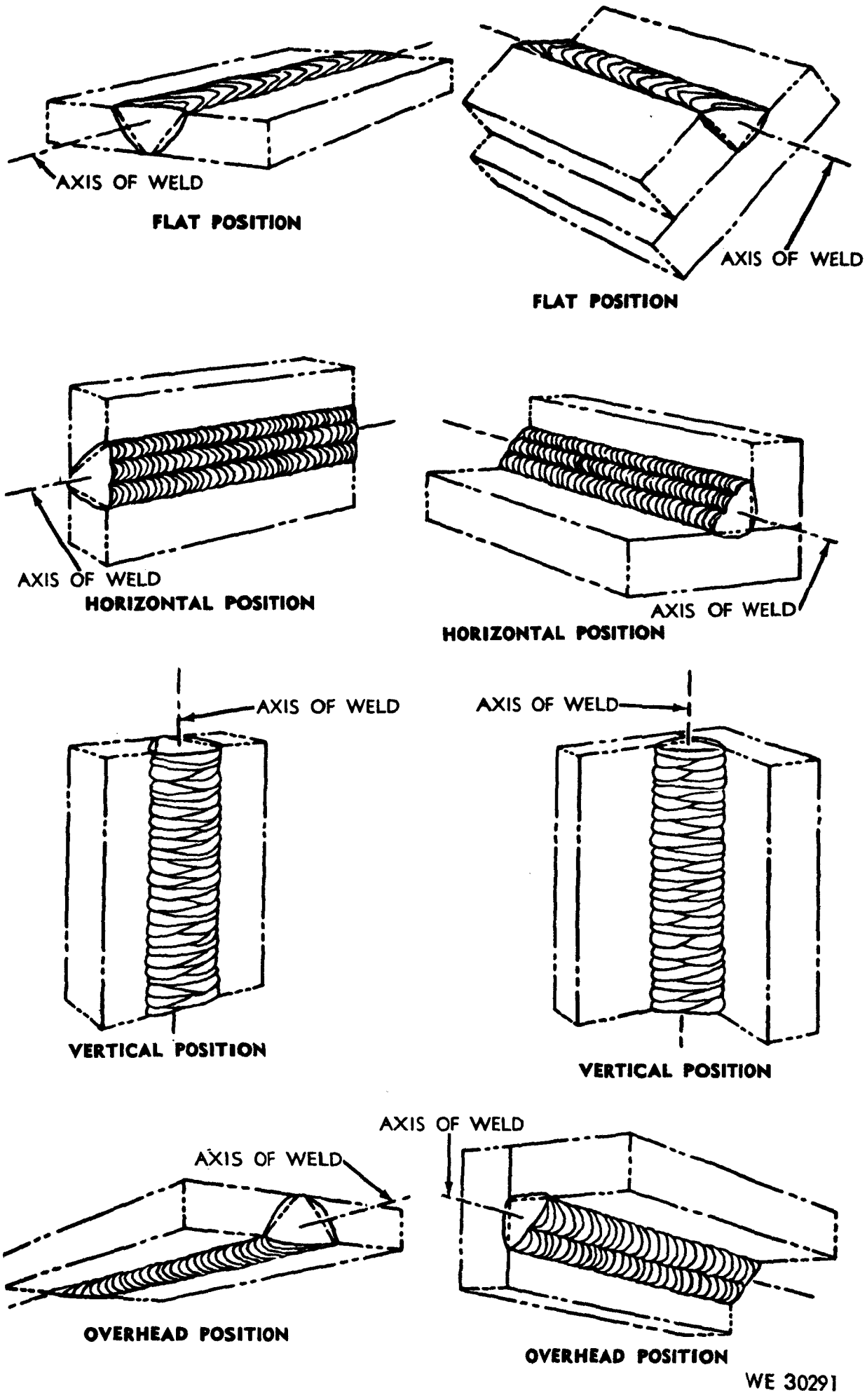

Figure 3-14. Positions of welding for groove and fillet welds.

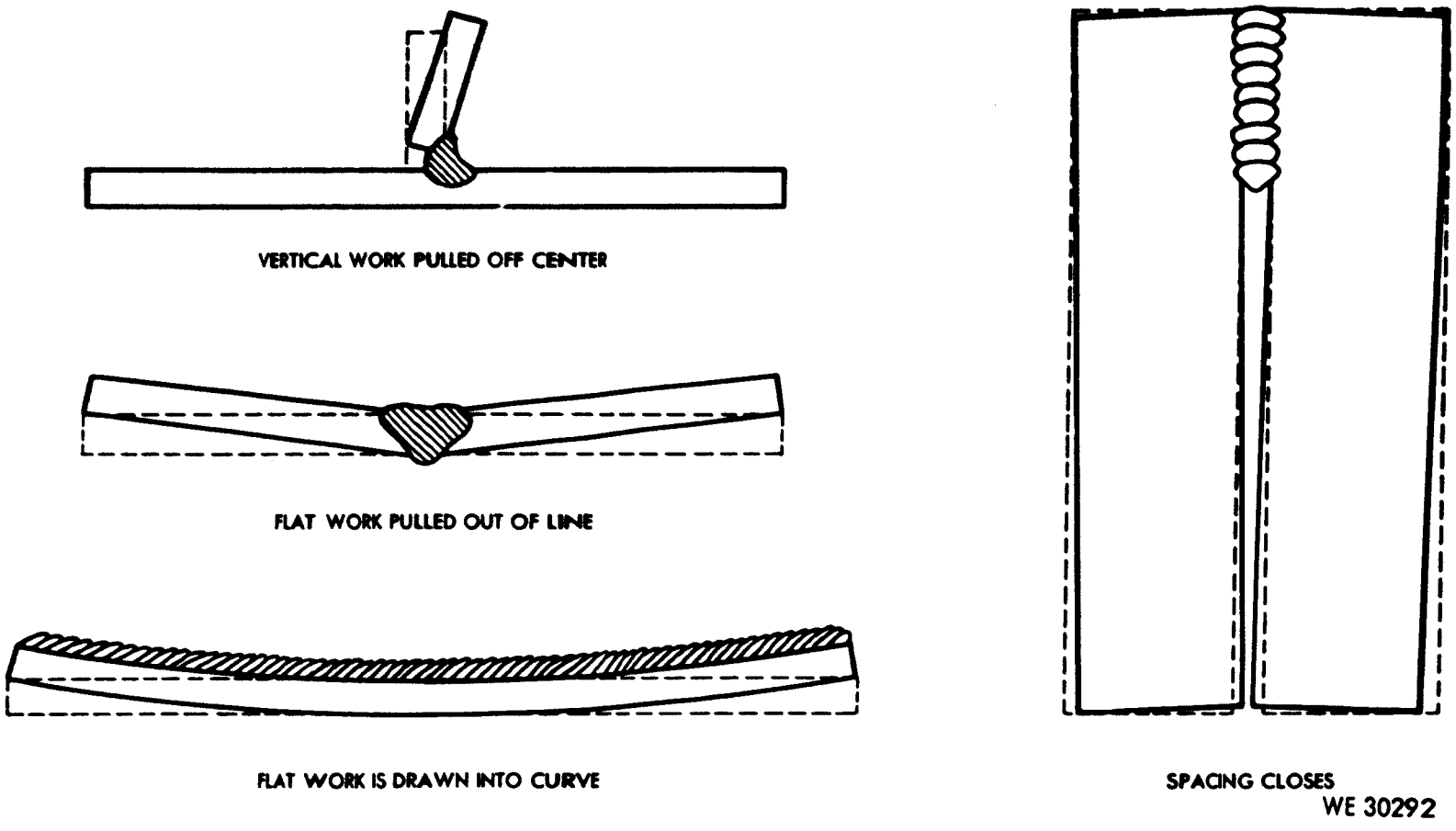

Figure 3–15. Results of weld metal shrinkage.

the welding operation. These quench plates absorb the heat of welding thereby decreasing the stresses due to expansion and contraction.

e. Jigs and fixtures may be used to hold members in place for welding. These are usually heavy sections in the vicinity of the seam, (fig. 3–18). These heavy sections cool the plate beyond the area of the weld.

f. The heat of welding may also be removed by placing wet asbestos along the sides of the seam being welded.

g. In welding pipe spacing as illustrated in fig. 3–16 is not practical. Proper alinement of pipe can best be attained by tack welding to hold the pieces in place. The pipes should be separated by a gap of 1/8 to 1/4-inch, depending on the size of the pipe being welded.

3–24. Controlling Contraction and Expansion in Casting

a. Expansion and contraction are provided for prior to welding gray iron castings by preheating. Before welding, small castings can be preheated by means of a torch to a very dull red heat, visible in a darkened room. After welding a reheating and controlled slow cooling or annealing will relieve internal stresses and assure a proper gray iron structure.

b. For larger castings, temporary charcoal fired furnaces built of fire brick and covered with asbestos are often used. Frequently, only local preheating of parts adjacent to the weld is necessary (fig. 3–19). Such local preheating can be done with a gasoline, kerosene, or welding torch.

c. Before welding a crack that extends from the edge of a casting it is advisable to drill a small hole 1/2 to 1-inch beyond the visible end of the crack. If the applied heat causes the crack to run, it will only extend to the drill hole.

d. Although the above procedures apply to gray iron castings, the same methods apply to bronze welded castings, except that less preheat is required.

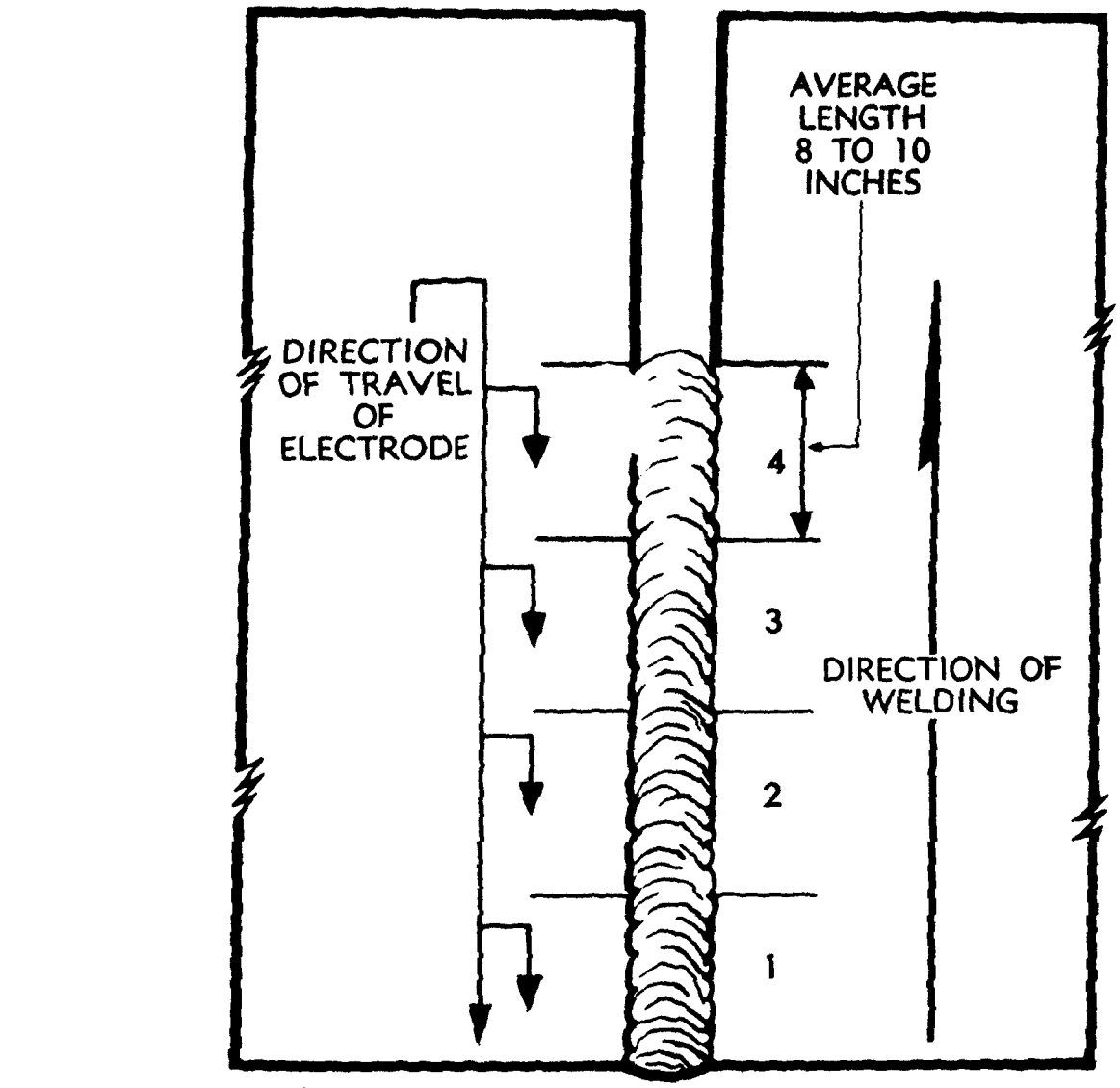

Figure 3-16. Methods of conteracting contraction.

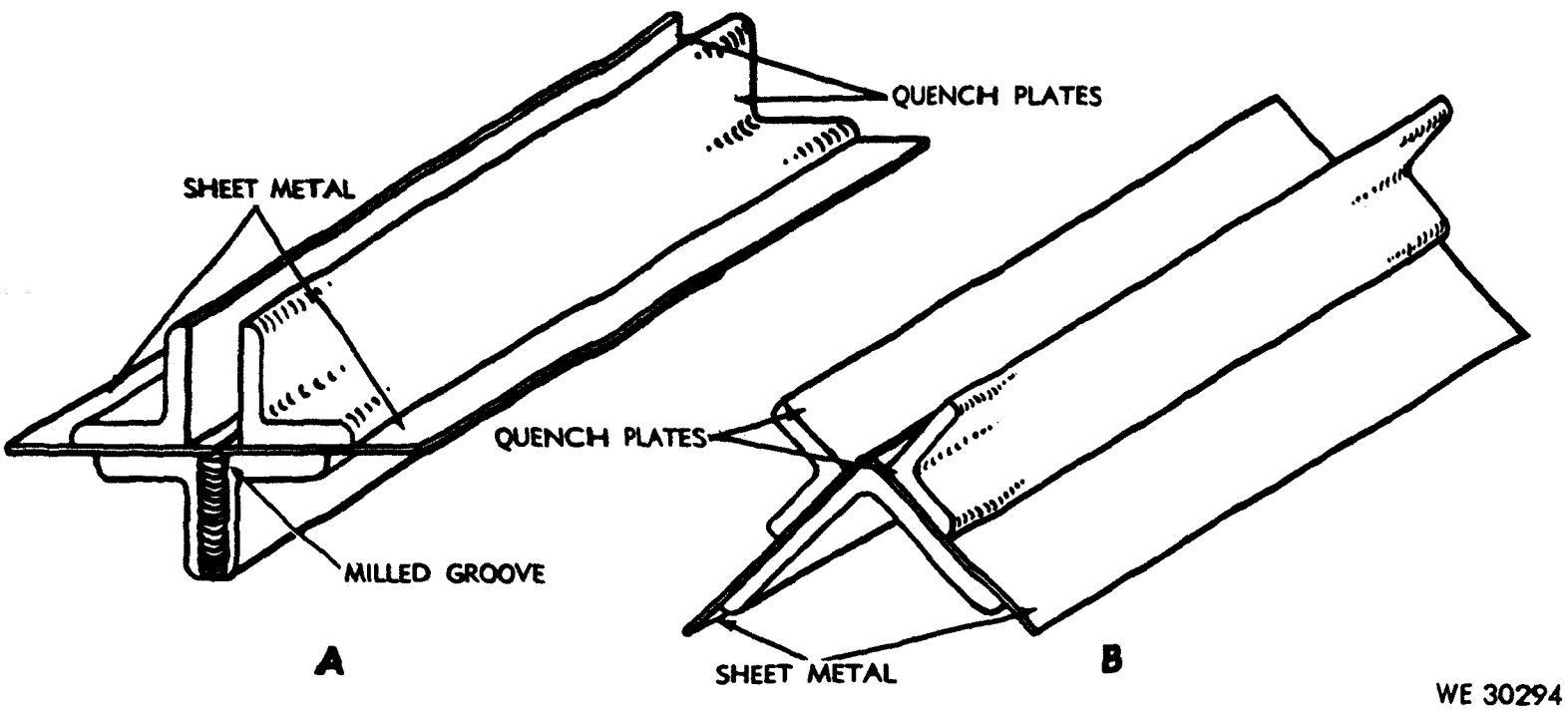

Figure 3–17. Quench plates used in the welding of sheet metal.

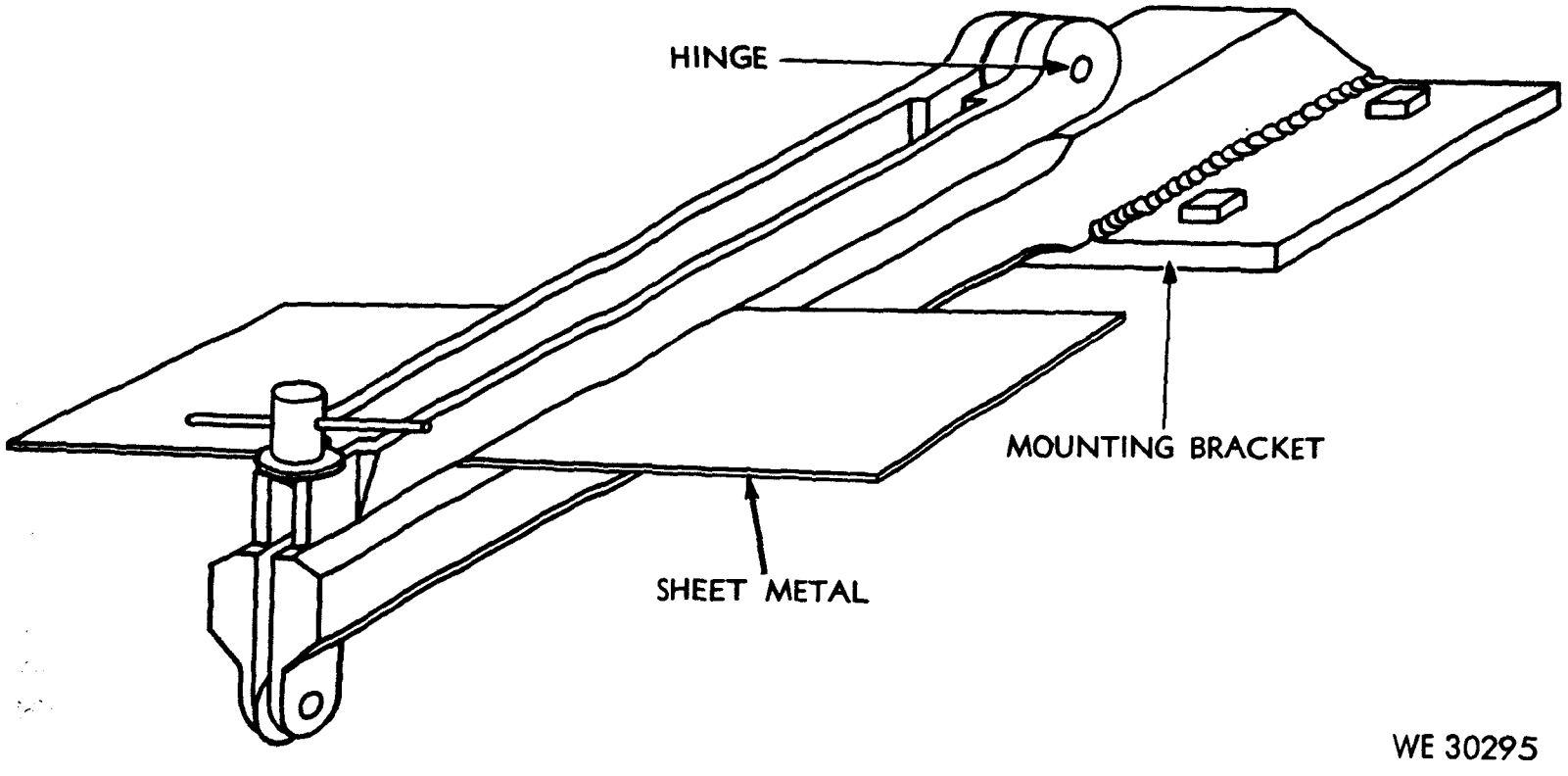

Figure 3–18. Controlling expansion and contraction of castings by preheating.

Section VI. WELDING STRESSES

3–25. General

When weld metal is added to the metal being welded it is essentially cast metal. Upon cooling the weld metal shrinks to a greater extent than the base metal in contact with the weld and because it is firmly fused the weld metal

exerts a drawing action. This drawing action produces stresses in and about the weld which may cause warping, buckling, residual stresses or other defects.

3–26. Stress Relieving

Stress relieving is the process for lowering residual stresses or decreasing their intensity. Where parts being welded are fixed too firmly to permit movement, or are not heated uniformly during the welding operation, stresses are developed by the shrinking of the weld metal at the joint. Parts that cannot move to accommodate expansion and contraction must be heated uniformly during the welding operation, and stress relieved after the weld is completed. These precautions are particularly important in welding aluminum, cast iron, high carbon, and other brittle or "hot-short" metals (i.e. those with low strength at temperatures immediately below the melting point). Ductile materials such as bronze, brass, copper and mild steel yield or stretch while in the plastic or soft conditions, and therefore, are less liable to crack. However, they may retain undesirable stresses which tend to weaken the finished weld.

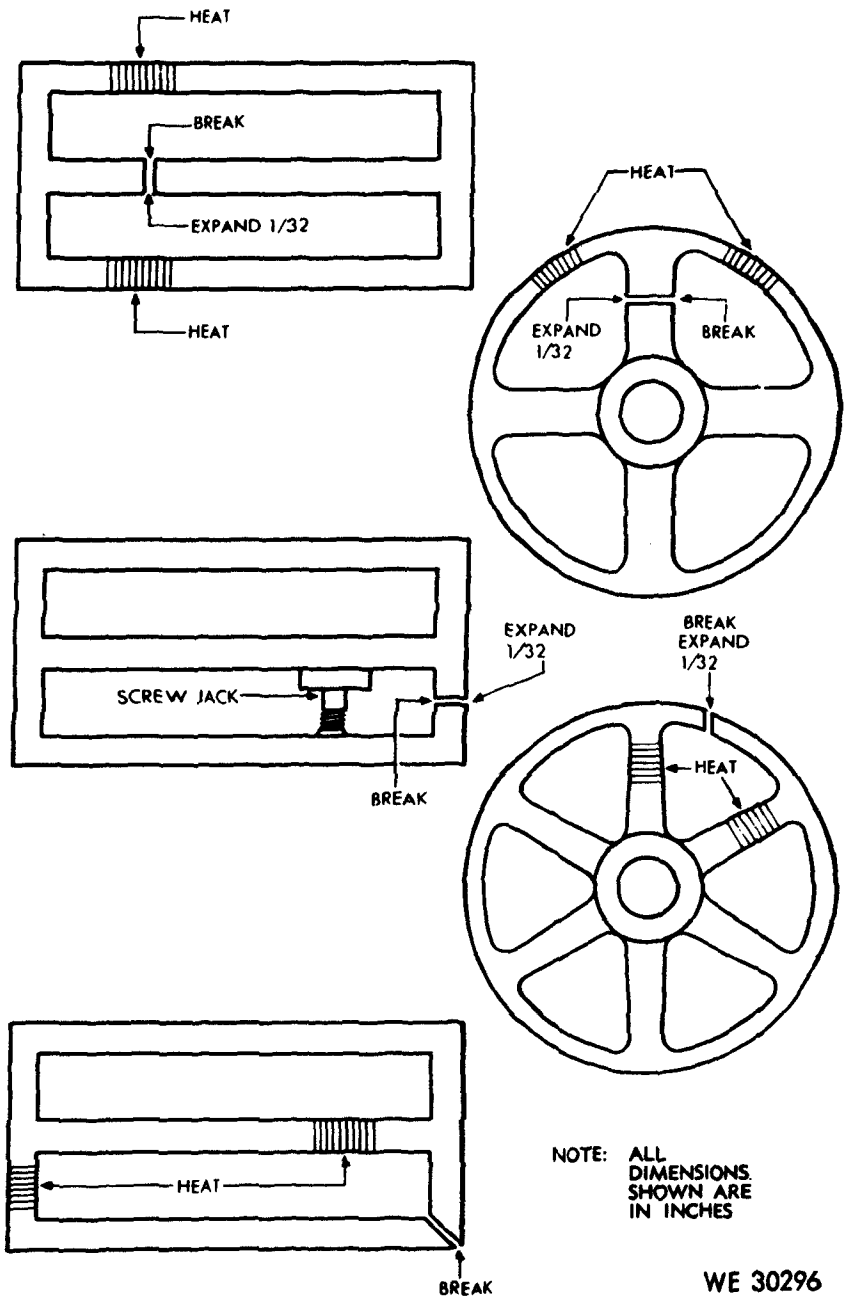

Figure 3–19. Controlling expansion and contraction of castings by preheating.

3-27. Stress Relieving Methods

a. Stress relieving in steel welds may be accomplished by preheating between 800 and 1,450 deg F., depending on the material, and then slowly cooling. Cooling under some conditions may take 10 to 12 hours. Small pieces, such as butt welded high speed tool tips, may be annealed by putting them in a box of powdered asbestos and cooling for 24 hours. In stress relieving mild steel, heating the completed weld for 1 hour per inch of thickness is common practice. On this basis steels ¼-inch thick should be heated for 15 minutes at the stress relieving temperature.

b. Another method of stress relieving is peening of the finished weld, preferably with compressed air and a roughing or peening tool. However, excessive peening may cause brittleness or hardening of the finished weld and actually cause cracking.

c. Preheating facilitates welding in many cases. It prevents cracking in the heat affected zone, particularly on the first passes of the weld metal. If proper preheating times and temperatures are used the cooling rate is slowed down sufficiently to prevent the formation of hard martensite which causes cracking. See table 8 for the preheating temperatures of specific metals.

d. The need for preheating steels and other metals is increased under the following conditions:

(1) When the temperature of the part or the surrounding atmosphere is low.

(2) When the diameter of the welding rod is small in comparison to the thickness of the metal being joined.

(3) When the welding speed is high.

(4) When the shape and design of the parts being welded are complicated.

(5) When there is a great difference in mass of the parts being welded.

(6) When welding steels with a high carbon, low manganese, or other alloy content.

(7) When the steel being welded tends to harden when cooled in air from the welding temperature.

Table 8. Preheating Temperatures

Metal	Degrees F
Low carbon steels (up to 0.25 percent carbon)	200 to 300
Medium carbon steels (0.25 to 0.45 percent carbon)	300 to 500
High carbon steels (0.45 to 0.90 percent carbon)	500 to 800
Carbon molybdenum steels (0.10 to 0.30 percent carbon)	300 to 600
Carbon molybdenum steels (0.30 to 0.35 percent carbon)	500 to 800
High strength constructional alloy	100 to 400
Manganese steels (up to 1.75 percent manganese)	300 to 800
Manganese steels (up to 15 percent manganese)	Usually not required
Nickel steels (up to 3.50 percent nickel)	200 to 700
Nickel chromium steels	200 to 1,000
Chromium steels	300 to 500
Stainless steels	Usually not required
Cast iron	700 to 800
Aluminum	500 to 800
Copper	500 to 800
Nickel	200 to 300
Monel	200 to 300
Brass and bronze	300 to 500

Note. The preheating temperatures for alloy steels are governed by the carbon as well as the alloy content of the steel.

CHAPTER 4

SAFETY PRECAUTIONS IN WELDING OPERATIONS

Section I. GENERAL SAFETY PRECAUTIONS

4–1. General

Great care should be taken in handling any type of welding equipment, to prevent personnel injury from fire, explosions, or harmful agents. Both general and specific safety precautions listed below must be strictly observed by workers who weld or cut metals.

a. Do not permit unauthorized persons to use welding or cutting equipment.

b. Do not weld in building with wooden floors, unless the floors are protected from hot metal by means of asbestos fabrics, sand, or other fireproof material. Be sure that hot sparks or hot metal will not fall on the legs and feet of the operator or on any welding equipment components.

c. Remove all flammable material such as cotton, oil, gasoline, etc., from the vicinity of welding.

d. Before welding or cutting warn those in close proximity who are not protected by proper clothing or goggles.

e. Remove assembled parts that may become warped or otherwise damaged by the welding process.

f. Do not leave hot, rejected electrode studs, steel scrap, or tools on the floor about the welding equipment. These may cause accidents.

g. Keep a suitable fire extinguisher conveniently located at all times.

h. Mark all hot metal after welding operations are completed.

4–2. Protection of the Eyes and Skin

a. *General.* Protective clothing and equipment must be worn during welding operations. During all oxy–acetylene welding and cutting processes operators will use safety goggles to protect the eyes from heat, glare, and flying fragments of hot metals. During all electric welding processes operators will use safety goggles and a hand shield or helmet equipped with a suitable filter glass (depending upon the size of the welding rods or the magnitude of the welding or cutting current), to protect against the intense ultra violet and infrared rays. When others are in the vicinity of electric welding processes the area must be screened so that the arc cannot be seen either by direct vision or by reflection from glass, metal, or other materials which reflect these rays.

b. *Protective Clothing.*

(1) Woolen clothing should be worn instead of cotton, because the wool is not easily burned or damaged by weld metal spatter.

(2) Aprons or jackets made of asbestos cloth or leather should be worn to provide protection against spatter of molten metal. This is especially important when welding in the vertical or overhead position.

(3) The welder should wear high upper shoes, and his pants should be without cuffs so that the molten metal will not be caught in them.

(4) Flameproof gauntlet gloves, preferably of leather, should be worn to protect the hands and arms from the rays of the arc, molten metal spatter, sparks, and hot metal. Leather gloves should be of sufficient thickness so that they will not shrivel in heat, burn through, or wear out quickly. Do not allow oil or grease to come in contact with the gloves because this will reduce their flame resistance and cause them to be readily ignited or charred.

c. *Protective Equipment.*

(1) To safeguard the eyes and face from harmful light rays and particles of hot metal, goggles, spectacles, or helmets with colored lenses should be worn when welding or cutting by any process. The color of the lenses, usually blue or brown, is an added protection against the intensity of white light or glare. Colored lenses make it possible to clearly see the metal and weld.

(2) Do not weld with cracked or defective shields because penetrating rays from the arc may cause serious burns. Be sure that the colored glass plates are the proper shade for arc welding. Protect the colored glass plate from spatter by using a cover glass. Replace these cover glasses when damaged or spotted by molten spatter.

Note. **This colored glass must be manufactured in accordance with specifications detailed in the "National Safety Code for the Protection of the Hands and Eyes of Industrial Workers", issued by National Bureau of Standards, Washington, D.C.**

(3) Two basic types of helmets are commonly used to protect eyes and all parts of the head which might be contacted with injurious rays. One type is worn on the welder's head and when not in use can be raised out of the way on a hinged strap. The other is a hand shield type which is held over the face with one hand by means of a handle. These helmets are made of vulcanized fiber, and are dull black in color to minimize light reflection.

4–3. Fire Hazards

a. During welding and cutting operations sparks and molten spatter are formed, and sometimes fly appreciable distances. For this reason welding or cutting should not be done near flammable materials, unless every precaution is taken to prevent ignition.

b. Whenever possible flammable materials attached to or near equipment requiring welding, brazing, or cutting should be removed. If removal is not practical a suitable shield of asbestos or other heat resistant material should be used to protect the flammable material. Fire extinguishing equipment for the type of fire that may be encountered is to be present.

c. When welding or cutting parts of vehicles in the oilpan, gasoline tank, and elsewhere on the vehicle should be considered a fire hazard and effectively shielded from sparks, slag, and molten metal.

4–4. Ventilation

a. When using welding equipment in a closed area make certain to provide proper ventilation, and that no traces of gasoline, acetylene, or other explosive vapors are present in the area. Station an assistant outside the danger zone. This assistant should be instructed to lookout for fires, and to take other necessary action in case of any emergency.

b. The fumes of burning paint, or those generated during brazing, welding or cutting of brass, lead, zinc, and galvanized or cadmium plated parts are filled with poisonous particles of oxides, lead, or zinc.

Warning: **Under the action of an electric, arc, nitrogen and oxygen from the air are converted into poisonous compounds. If welding is conducted in a confined and insufficiently ventilated space these compounds may become highly concentrated, and if inhaled in any appreciable quantity they may cause serious disability or death.**

c. Because welding operations usually generate harmful gases, fumes, and dust, adequate ventilation is essential. Local exhaust systems should be provided to remove such substances. Where the nature of the work requires further protection special respiratory equipment should be furnished the operators. Many unknown toxic hazards can be encountered, particularly in experimental welding of new types of materials. Required ventilation standards and standard operating procedures should be cleared through the safety inspector before starting such a new operation.

Section II. SAFETY PRECAUTIONS IN OXY-ACETYLENE WELDING

4–5.

a. In addition to the information listed in Section 1 of this chapter the following safety precautions must be observed.

(1) Do not experiment with torches or regulators in any way. Do not use oxygen regulators with acetylene cylinders.

(2) Always use the proper tip of nozzle, and always operate it at the proper pressure for the particular work involved. This information should be taken from work sheets or tables supplied with the equipment.

(3) When not in use make certain that the torch is not burning and that the valves are tightly closed. Do not hang the torch with its hose on the regulator or cylinder valves.

(4) Do not light a tourch with a match, from hot metal, or in a confined space. The explosive mixture of acetylene and oxygen might cause personal injury or property damage when ignited. Use friction lighters, stationary pilot flames, or some other suitable source of ignition.

(5) When working in confined spaces provide adequate ventilation for the dissipation of explosive gases that may be generated.

(6) Keep a clear space between the cylinder and the work so that the cylinder valves can be reached easily and quickly.

(7) Use cylinders in the order received. Store full and empty cylinders separately and mark the latter MT.

(8) Compressed gas cylinders owned by commercial companies should not be painted regulation Army olive drab while in the hands of the troops.

(9) Never use cylinders for rollers, supports, or any purpose other than that for which they are intended.

b. *Acetylene Cylinders.*

(1) Always refer to acetylene by its full name and not by the word "gas" alone. Acetylene is very different from city or furnace gas.

(2) Acetylene cylinders should be handled with care to avoid damage to the valves or the safety fuse plug. The cylinders should be stored upright in a well ventilated, well protected, dry place at a safe distance from highly combustible materials such as oil or paint. Do not store the cylinders near radiators, furnaces, or in any above normal temperature area. The heat will increase the pressure which may cause the safety fuse in the cylinder to blow out. Storage areas should be located away from elevators, gangways, or other places where there is danger of their being knocked over or damaged by falling objects.

(3) A suitable truck, chain, or strap should be used to prevent cylinders from falling or being knocked over while in use. Cylinders should be kept at a safe distance from the welding operation so that there will be little possibility of sparks, hot slag, or flames reaching them. They should be kept away from radiators, piping systems, layout tables, etc., which may be used for grounding electrical circuits. Nonsparking tools should be used when changing fitting on cylinders of flammable gases.

(4) Never use acetylene from cylinders without reducing the pressure with a suitable pressure reducing regulator. Never use acetylene at pressures in excess of 15 psi.

(5) Before attaching the pressure regulators open each acetylene cylinder valve for an instant to blow dirt out of the nozzles. Wipe off the connection seat with a clean cloth. Do not stand in front of valves when opening them.

(6) Outlet valves which have become clogged with ice should be thawed with warm water. Do not use scalding water or an open flame.

(7) Be sure the regulator tension screw is released before opening the cylinder valve. Always open the valve slowly to avoid strain on the regulator gage which records the cylinder pressure. Do not open the valves more than one and one half turns. Usually one half turn is sufficient. Always use the special T–wrench provided for the acetylene cylinder valve. Leave this wrench on the stem of the valve while the cylinder is in use so that the acetylene can be quickly turned off in an emergency.

(8) Acetylene is a highly combustible fuel gas and great care should be taken to keep sparks, flames, and heat away from the cylinders. Never open an acetylene cylinder valve near other welding in cutting work.

(9) Never test for an acetylene leak with an open flame. Test all joints with soapy water. Should a leak occur around the valve stem of the cylinder, close the valve and tighten the packing nut. Cylinders leaking around the safety fuse plug should be taken outdoors,

away from all fires and sparks, and the valve opened slightly to permit the contents to escape.

(10) If an acetylene cylinder should catch fire it can usually be extinguished with a wet blanket. A burlap bag wet with calcium chloride solution is effective for such an emergency. If these fail spray a stream of water on the cylinder to keep it cool.

(11) Never interchange acetylene regulators, hose, or other apparatus with similar equipment intended for oxygen.

(12) Always turn the acetylene cylinder so that the valve outlet will point away from the oxygen cylinder.

(13) When returning empty cylinders, see that the valves are closed to prevent escape of residual acetylene or acetone solvent. Screw on protecting caps.

c. *Oxygen Cylinders.*

(1) Always refer to oxygen by its full name and not by the word "air" alone.

(2) Keep oxygen away from oil, grease, and other flammable materials. Do not handle oxygen cylinders, valves, regulators, hose or apparatus with oily hands. Do not permit a jet of oxygen to strike greasy clothes, any oily surface, or to enter a fuel oil storage container.

Warning: **Oil or grease in the presence of oxygen will ignite violently. Especially in inclosed pressurized area.**

(3) Do not store oxygen cylinders together with cylinders containing acetylene or other fuel gases. They should be grouped separately, and if possible with a fire resisting wall between the acetylene and oxygen cylinders.

(4) When oxygen cylinders are in use or being moved, care must be taken to avoid dropping, knocking over, or striking the cylinders with heavy objects. Do not handle oxygen cylinders roughly.

(5) All oxygen cylinders with leaky valves or safety fuse plugs should be set aside and marked for the attention of the supplier. Do not tamper with or attempt to repair oxygen cylinder valves. Do not use a hammer or wrench to open the valves.

Warning: **Do not substitute oxygen for compressed air in pneumatic tools, Do not use it to blow out pipe lines, test radiators, purging tanks or containers, or to "dust" clothing or work.**

(6) Open the oxygen cylinder valve slowly to prevent damage to the regulator high pressure gage mechanism. Be sure that the regulator tension screw is released before opening the valve. When not in use the cylinder valves should be closed, and the protecting caps screwed on to prevent damage to the valves.

(7) When the oxygen cylinder is in use open the valves to the full limit to prevent leakage around the valve stem.

(8) Always use regulators on oxygen cylinders to reduce the cylinder pressure to a low working pressure. Otherwise the high pressure will burst the hose.

(9) Never interchange oxygen regulators, hose, or other apparatus with similar equipment intended for other gases.

d. *Hose.*

(1) Do not allow the hose to come in contact with oil or grease. These will penetrate and deteriorate the rubber and constitute a hazard with oxygen.

(2) Always protect the hose from being walked on or run over. Avoid kinks and tangles. Do not leave the hose where anybody can trip over it. This could result in personal injury, damaged connections, or cylinders being knocked over. Do not work with the hose over your shoulder, around your legs, or tied to your waist.

(3) Protect the hose from hot slag, flying sparks, and open flames.

(4) Never force hose connections that do not fit. Do not use white lead, oil, grease, or other pipe fitting compounds for connections on hose, torch, or other equipment. Never crimp hose to shut off gases.

(5) Examine all hose periodically for leaks by immersing hose in water while under pressure. Do not use matches to check for leaks in the acetylene hose. Repair leaks by cutting hose and inserting a splice. Do not use tape for mending. Replace hose if necessary.

(6) Make sure that the hose is securely attached to torches and regulators before using.

(7) Do not use new or stored hose lengths without first blowing them out with compressed air to eliminate talc or accumulated for-

eign matter which might otherwise enter and clog the torch parts.

(8) Do not tape oxygen and acetylene hoses together.

Section III. SAFETY PRECAUTIONS FOR ARC WELDING

4–6. Electric Circuits

a. The ac and dc open circuit voltages are low compared to voltages used for lighting circuits and motor driven shop tools. Normally they cause neither injury nor shock. However, these voltages can cause severe shock, particularly in hot weather, when the weldor is sweating. Consequently the precautions listed below should always be observed.

(1) Check the welding equipment to make certain that electrode connections and insulation on holders and cables are in good condition.

(2) Keep hands and body insulated from both the work and the metal electrode holder. Avoid standing on wet floors or coming in contact with grounded surfaces.

(3) Perform all welding operations within the rated capacity of the welding cables. Excessive heating will impair the insulation and damage the cable leads.

b. Inspect the cables periodically for looseness at the joints, defects due to wear, or other damage. Defective or loose cables are a fire hazard. Defective electrode holders should be replaced and connections to the holder should be tightened.

c. Welding generators should be so located or shielded that dust, water, or other foreign matter will not enter the electrical windings or the bearings.

4–7. Welding Machines

a. When electric generators powered by internal combustion engines are used inside buildings or in confined areas the engine exhaust must be conducted to the outside atmosphere.

b. Check the welding equipment to make sure that the electrode connections and the insulation on holders and cables are in good condition. All checking should be done on dead circuits. All serious trouble should be investigated by a trained electrician.

c. A motor-generator type of arc welding machine must have a power ground on the machine, otherwise stray current may cause a severe shock to the operator if he should contact the machine and a good ground.

d. Do not operate the polarity switch while the machine is operating under welding current load. Consequent arcing at the switch will damage the contact surfaces, and the flash may burn the person operating the switch.

e. Do not operate the rotary switch for current settings while the machine is operating under the welding current load; severe burning of the switch contact surfaces will result. Operate the rotary switch while the machine is idling.

f. Disconnect the welding machines from the power supply when they are left unattended.

g. Use well insulated electrode holders and cables. Wear dry protective covering on hands and body.

h. Partially used electrodes should be removed from the holders when not in use and a place should be provided to hang up or lay down the holder where it will not come in contact with persons or conducting objects.

i. The work clamp must be securely attached to the work before the welding operation is started.

4–8. Protective Screens

a. When welding is done near other personnel screens should be used to protect their eyes from the arc or reflected glare.

b. Portable screens should be used to prevent drafts of air from interfering with the stability of the arc.

c. Arc welding operations give off an intense light. Snap-on lightproof screens should be used to cover the windows of the welding truck to avoid detection when welding at night.

Section IV. SAFETY PRECAUTIONS FOR GAS-SHIELDED ARC WELDING

4–9. Potential Hazards

Gas-shielded arc welding processes have certain dangers associated with them. The following arc hazards which are peculiar to or might be increased by gas shielded arc welding:

a. *Gases.*

(1) *Ozone.*

(2) *Oxides of nitrogen.*

(3) *Carbon dioxide and carbon monoxide.*

(4) *Trichloroethylene and perchloroethylene decomposition.*

b. *Radiant energy.*

c. *Radio activity from Thoriated Tungsten Electrodes.*

d. *Metal fumes.*

4–10. Protective Measures

a. *Gases.*

(1) Ozone concentration increases with the type of electrodes used, amperage, extension of arc time, and increased argon flow. If welding is carried out in confined spaces the ozone concentration may increase to harmful levels. Under conditions of good ventilation and good welding practices ozone will not be a hazard.

(2) In most welding operations natural ventilation is sufficient to reduce the danger of nitrogen dioxide to a safe level. However, during gas tungsten arc cutting of stainless steel, using a 90 percent nitrogen-10 percent argon mixture as the shielding gas, nitrogen oxide concentrations are very high. High concentrations have also been found during experimental use of nitrogen as a shield gas. The amount of nitrogen oxides produced constitutes a definite health hazard and ventilation should be provided for their control.

(3) Carbon dioxide is dissociated by the heat of the arc to form carbon monoxide. Under normal welding conditions in open air or in large work areas there should be no hazard from inhalation of these gases. However, where the weldor works with his head directly in the path of the fumes, or where welding is done in a confined space, ventilation adequate to control the fumes should be provided.

(4) Eye, nose, and throat irritation can be produced when welding is carried on near a source of trichloroethylene or perchloroethylene vapors. Two sources of these vapors are wiping rags and degreasers. Ultraviolet radiation from the arc causes rapid decomposition of these vapors which are in the vicinity. Welding in an area with these vapors can produce dangerously high concentrations of noxious fumes, including phosgene. This decomposition is accompanied by a very irritating, disagreeable odor.

b. *Radiant Energy.* The total radiant energy produced by the gas-shielded arc is approximately twice as great as that produced by the shielded metal-arc at equal current values. Visible light is increased with gas-shielded arc welding, so the deepest shade of filter glass that permits adequate visibility should be used by the welder. Leather, wool, and aluminum coated cloth withstand the action of radiant energy reasonably well. However, aluminum coated cloth may present reflection and conductivity hazards. Cotton clothing will disintegrate in from one day to two weeks because of ultraviolet radiation. Skin burns will occur following a short exposure.

c. *Radioactivity from Thoriated-Tungsten Electrodes.* Gas tungsten-arc welding using these electrodes may be employed with no significant hazard to the welder or other room occupants. Special ventilation or protective equipment is not indicated for protection from radioactive fumes, except possibly in a small totally enclosed space.

d. *Metal Fumes.* A large number of metals may be welded using the gas-shielded arc process. The physiological effects, if any, of the fumes produced will vary with the metal involved. Normal ventilation and protection requirements should be adequate to prevent metal fume concentration.

Section V. SAFETY PRECAUTIONS FOR WELDING AND CUTTING CONTAINERS THAT HAVE HELD COMBUSTIBLES

4–11. Explosion Hazards

a. In heating, welding and cutting of containers which are not free of combustible solids, liquids, vapors, dusts, and gases, severe explosions and fires may result. Containers of this kind can be made safe by following one of the methods described in paragraphs 4–13 through 4–17.

Warning: **Do not presume that a container is clean and safe until proven so by proper tests. Do not weld in places where dust or combustible particles are suspended in air or where explosive vapors are present.**

b. Flammable and explosive substances may be present in a container because it previously held one of the following substances.

(1) Gasoline, light oil, or other volatile liquid that releases potentially hazardous vapors at atmospheric pressure.

(2) An acid that reacts with metals to produce hydrogen.

(3) A nonvolatile oil or a solid that will not release hazardous vapors at ordinary temperatures, but will release such vapors when exposed to heat.

(4) A combustible solid, i.e., finely divided particles which may be present in the form of an explosive dust cloud.

4–12. Preparing the Container for Cleaning

a. In cleaning do not use chlorinated hydrocarbons, such as trichloroethylene or carbon tetrachloride. The materials may be decomposed by the heat or radiation from welding or cutting to form phosgene.

b. Disconnect or remove from the vicinity of the container all sources of ignition before cleaning is started.

c. Personnel cleaning the container must be protected against harmful exposure.

d. If practical move the container into the open. When indoors make sure the room is well ventilated.

e. Empty and drain the container thoroughly, including all internal piping, traps, and standpipes. Removal of scale and sediment may be facilitated by scraping, by hammering with a nonferrous mallet, or by using a nonferrous chain as a scrubber. Do not use any tools which may spark and cause flammable vapors to ignite. Dispose of the residue before starting to weld or cut.

f. Identify material for which the container was used, determine its flammability and toxicity characteristics. If the substance previously held by the container is not known, assume that the substance is flammable, toxic, and insoluble in water.

g. Cleaning a container that has held combustibles is necessary in all cases before any welding or cutting is done. This cleaning may be supplemented by filling the container with water or by using an inert gas both before and during such work.

h. Treat each compartment in a container having two or more compartments in the same manner, regardless of which compartment is to be welded or cut.

4–13. Methods of Precleaning Containers Having Held Flammable Liquids

a. *General.* It is very important for the safety of personnel to completely clean all tanks and containers, which have held volitable or flammable liquids, of all dangerous fumes. Safety precautions cannot be over emphasized of the dangers involved when these items are not thoroughly purged prior to the application of heat, especially open flame.

b. *Accepted Methods of Cleaning.* The various methods of cleaning of these containers are listed herein. However, the steam cleaning and automotive exhaust methods are considered, by military personnel, to be the safest and easiest methods of purging of these containers.

4–14. Automotive Exhaust Method of Cleaning

a. Completely drain the container of all fluid.

b. Fill the container at least 25 percent full of a solution of hot soda or detergent (1 lb per gallon of water) and rinse it sufficiently to insure that the inside surface is thoroughly flushed.

c. Drain the solution and again rinse the container with clean water.

d. Open all inlets and outlets of the container.

e. Using a flexible tube, hose, or other method of directing the exhaust from a motor vehicle or stationary engine, direct a stream of exhaust fumes into the container making sure that there are sufficient openings to allow the fumes to flow through the container.

f. Allow the fumes to circulate through the container for 30 minutes or until the container is so hot it cannot be handled.

g. Disconnect the tube from the container and using compressed air (min 50 psi) blow out all fumes.

4–15. Steam Method of Cleaning

a. Fill the container at least 25 percent full with hot soda detergents, or soda ash solution (1 lb per gallon of water) and agitate it sufficiently to insure that the inside surfaces are thoroughly flushed.

Note. Do not use soda ash solution on aluminum.

b. Drain the container thoroughly.

c. Close all openings in the container with the exception of the drain and filling connection or vent. Use damp asbestos, damp wood flour or similar material for sealing cracks or other damaged sections.

d. Use steam under low pressure and a hose of at least ¾-inch diameter. In this method use low pressure steam. Control the steam pressure by a valve ahead of the hose. If a metal nozzle is used at the outlet end it should be made of nonsparking material and should be electrically connected to the container; the container, in turn, should be grounded to prevent an accumulation of static electricity.

e. The procedure for the steam method of cleaning is as follows:

(1) Blow steam into the container, preferably through the drain, for a period of time to be governed by the condition or nature of the flammable substance previously held by the container. When a container has only one opening, position it so the condensate will drain from the same opening into which the steam is inserted. (When steam or hot water is used to clean a container wear suitable clothing, such as boots, hood, etc., to protect against burns).

(2) Continue steaming until the container is free from odors and the metal parts are hot enough to permit steam vapors to flow freely out of the container vent or similar opening. Do not set a definite time limit for steaming containers as rain, extreme cold, or other weather conditions may condense the steam as fast as it is introduced. It may take several hours to heat the container to such a temperature that steam will flow freely from the outlet of the container.

(3) Thoroughly flush the inside of the container with hot, preferably boiling, water.

(4) Drain the container.

(5) Inspect the inside of the container as described in paragraph 4–17c(7). If it is not clean repeat steps (1), (2), (3), and (4) above.

(6) Close the container openings. In 15 minutes test a gas sample as described in paragraph 4–17c(8).

4–16. Water Method of Cleaning

a. Water-soluable substances can be removed by repeatedly filling and draining the container with water. Water soluable acids, acetone, and alcohol can be removed in this manner. Diluted acid frequently reacts with metal to produce hydrogen; care must be taken to see that all traces of the acid are removed.

b. When the original container substance is not readily water-soluable it must be treated by the steam method or hot chemical solution method.

4–17. Hot Chemical Solution Method of Cleaning

a. The chemicals generally used in this method are trisodium phosphate (strong washing powder) or a commercial caustic cleaning compound dissolved in water to a concentration of 2 to 4 oz of chemical per gallon of water.

b. When cleaning by this method guard against injury from steam or the caustic cleaning compound. Use suitable goggles, gloves, and other protective clothing.

c. The procedure for the hot chemical solution method of cleaning is as follows:

(1) Close all container openings with the

exception of the drain and filling connection or vent. Use damp asbestos, damp wood flour, or similar material for sealing cracks or other damaged sections.

(2) Fill the container to overflowing with water, preferably letting water in through the drains. If there is no drain, flush the container by inserting the hose through the filling connection or vent. Lead the hose to the bottom of the container to get agitation from the bottom upward. This causes any remaining liquid, scum, or sludge to be carried upward and out of the container.

(3) Drain the container thoroughly.

(4) Completely dissolve the amount of chemical required (par. 4–17a) in a small amount of hot or boiling water and pour this solution into the container. Then fill the container with water.

(5) Make a steam connection to the container either through the drain connection or by a pipe entering through the filling conection or vent. Lead the steam to the bottom of the container. Admit steam into the chemical solution and maintain the solution at a temperature of 170 to 180 deg F. At intervals during the steaming add enough water to permit overflowing of any volatile liquid, scum or sludge, that may have collected at the top. Continue steaming until the point is reached when no appreciable amount of volatile liquid, scum, or sludge appears at the top of the container.

(6) Drain the container.

(7) Inspect the inside of the container to see if it is clean. To do this use a mirror to reflect light into the container. If inspection shows that it is not clean repeat steps (4), (5), and (6) above and inspect. (Use a nonmetal electric lantern or flashlight suitable for inspection of locations where flammable vapors are present).

(8) Close the container openings. In 15 minutes reopen the container and with a combustible gas indicator test for gas vapor. If the vapor concentration is in excess of 14 percent of the lower limit of flammability, repeat the cleaning procedure.

d. If steaming facilities for heating the chemical solution are not available a less effective method is the use of a cold water solution with the amount of cleaning compound increased to about 6 oz per gallon of water. It will help if the solution is agitated by rolling the container or by blowing air through the solution by means of an air line inserted near the bottom of the container.

4–18. Marking of Safe Containers

After cleaning and testing that a container is safe for welding and cutting, stencil or tag it. The stencil or tag should include a phrase such as: "Safe for welding and cutting," the signature of the person so certifying, and the date.

4–19. *Filling Treatment*

It is desirable to fill the container with water during welding or cutting as a supplement to any of the cleaning methods. Where this added precaution is taken, place the container so that it can be kept filled to within a few inches of the point where the work is to be done. Make sure the space above the water level is vented so that the heated air can escape from the container.

4–20. Preparing the Clean Container for Welding or Cutting—Inert Gas Treatment

a. Inert-gas may be used as a supplement to any of the cleaning methods, and as an alternative to the water filling treatment. If sufficient inert gas is mixed with flammable gases and vapors the mixture will become nonflammable. A continuous flow of steam may also be used. The steam will reduce the air concentration and make the air-flammable gas mixture to lean to burn.

b. Permissible inert gases include carbon dioxide and nitrogen.

(1) When carbon dioxide is used a minimum concentration of 50 percent is required, except where the flammable vapor is principally hydrogen, carbon monoxide, or acetylene. In these cases a minimum concentration of 80 percent is required. Carbon dioxide is heavier than air and during welding or cutting operations will tend to remain in containers having a top opening.

(2) When nitrogen is used the concentrations should be at least 10 percent greater than those specified for carbon dioxide in (1) above.

(3) Do not use carbon monoxide.

c. The procedure for inert gas, carbon dioxide, or nitrogen treatment is as follows:

(1) Close all openings in the container with the exception of the filling connection and vent. Use damp asbestos, damp wood flour, or similar material for sealing cracks or other damaged sections.

(2) Position the container so that the spot to be welded or cut is on top. Then fill it with as much water as possible.

(3) Calculate the volume of the space above the water level and add enough inert gas to meet the minimum concentration for nonflammability. This will usually require a greater volume of gas than the calculated minimum, since the inert gas may tend to flow out of the vent after displacing only part of the previously contained gases or vapors.

(a) Introduce the inert gas, carbon dioxide, or nitrogen from the cylinder through the container drain at about 5 psi. If the drain connection cannot be used introduce the inert gas through the filling opening or vent. Extend the hose to the bottom of the container, or to the water level, so that the flammable gases are forced out of the container.

(b) If using solid carbon dioxide, crush and distribute it evenly over the greatest possible area to obtain a rapid formation of gas.

d. Avoid bodily contact with solid carbon dioxide. It will produce "burns". Avoid breathing large amounts of carbon dioxide since it may act as a respiratory stimulant, and in sufficient quantities can act as an asphyxiant.

e. Determine by a suitable gas testing method whether enough carbon dioxide or nitrogen is present. Take steps to maintain a high inert gas concentration during the entire welding or cutting operation by one of the following methods.

(1) If gas is supplied from cylinders, continue to pass the gas into the container.

(2) If carbon dioxide is used in solid form, add small amounts of crushed solid at intervals, to generate more carbon dioxide gas.

CHAPTER 5

WELDING AND CUTTING EQUIPMENT

Section I. OXY-ACETYLENE WELDING EQUIPMENT

5–1. General

The equipment used for acetylene welding consists of a source of oxygen and source of acetylene from a portable or stationary outfit together with two regulators, two lengths of hose with fittings, a welding torch together with a cutting attachment or a separate cutting torch together with a cutting attachment, or a separate cutting torch. In addition suitable goggles are required for eye protection, gloves to protect the hands, a method to light the torch, and wrenches for the various connections on the cylinders, regulators, and torches.

5–2. Stationary Welding Equipment

This equipment is installed where welding operations are conducted in a fixed location. Oxygen and acetylene are provided in the welding area in the following manner:

a. *Oxygen.* The oxygen is obtained from a number of cylinders manifolded and equipped with a master regulator to control the pres-

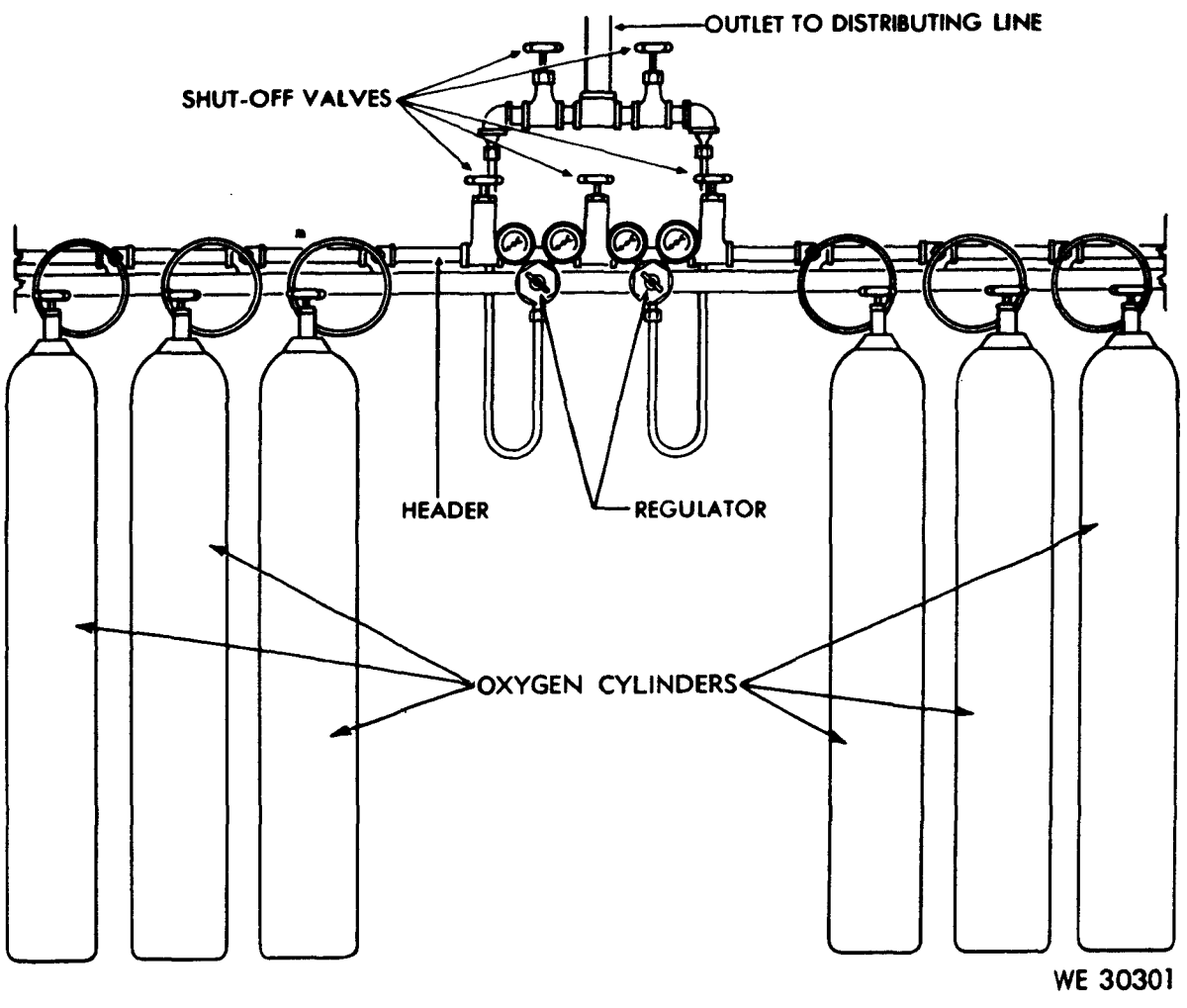

Figure 5–1. Stationary type oxygen-cylinder manifold, and other equipment.

sure and the flow (fig. 5–1). The oxygen is supplied to the welding stations through a pipe line equipped with station outlets (fig. 5–2).

b. *Acetylene.* The acetylene is obtained either from acetylene cylinders set up as shown in figure 5–3, or an acetylene generator such as is shown in figure 5–4. The acetylene is supplied to the welding stations through a pipe line equipped with station outlets as shown in figure 5–2.

Note. **The acetylene generator type eqiupment (fig. 5–4) is not a standard item of issue and is included in this manual for information only.**

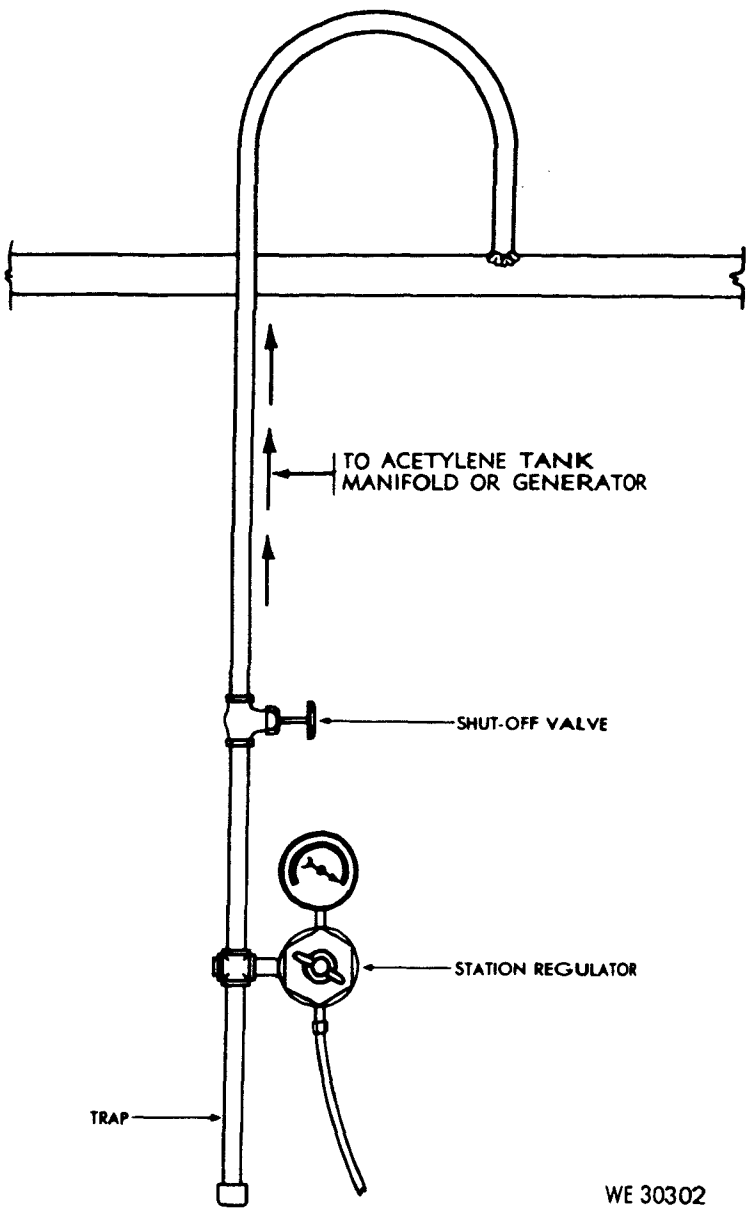

Figure 5–2. Station outlet for oxygen or acetylene.

5–3. Portable Welding Equipment

The portable oxy-acetylene welding outfit consists of an oxygen cylinder and acetylene cylinder with attached valves, regulators, gages, and hose (fig. 5–5). This equipment may be temporarily secured on the floor, or mounted in a 2 wheel all welded steel truck equipped with a platform which will support two large size cylinders. The cylinders are secured by chains attached to the truck frame. A metal toolbox, welded to the frame, provides storage space for torch tips, gloves, fluxes, goggles, and necessary wrenches.

5–4. Acetylene Generator

a. Acetylene is a fuel gas composed of carbon and hydrogen (C_2H_2). It is generated by the action of calcium carbide, a gray stone like substance, and water in a generating unit (fig. 5–4). Acetylene is a colorless, but has a distinctive odor that can be easily detected.

b. Mixtures of acetylene and air, containing from 2 to 80 percent of acetylene by volume, will explode when ignited. However, with suitable welding equipment and proper precautions acetylene can be safely burned with oxygen for heating, welding, and cutting purposes.

c. Acetylene when burned with oxygen produces an oxy-acetylene flame with inner cone tip temperatures of approximately 6,300 deg F., for an oxidizing flame; 5,850 deg F. for a neutral flame; and 5,700 deg F. for a carburizing flame.

d. The generator shown in figure 5–4 is a commonly used commercial type. A single rated 300 pound generator uses 300 pounds of calcium carbide and 300 gallons of water. This amount of material will generate 4.5 cubic feet of acetylene per pound; the output for this load is approximately 300 cubic feet per hour for 4.5 hours. A double rated generator uses 300 pounds of finer sized calcium carbide through a special hopper and will deliver 600 cubic feet of acetylene for 2.5 hours.

e. In the operation of the generator the calcium carbide is added to the water through a hopper mechanism (fig. 5–4) at a rate which will maintain a working pressure of approximately 15 psi. Since considerable heat is given off during the reaction precautions must be taken to prevent excessive pressures in the generator which might cause fires or explosions. A pressure regulator is a built in part of this

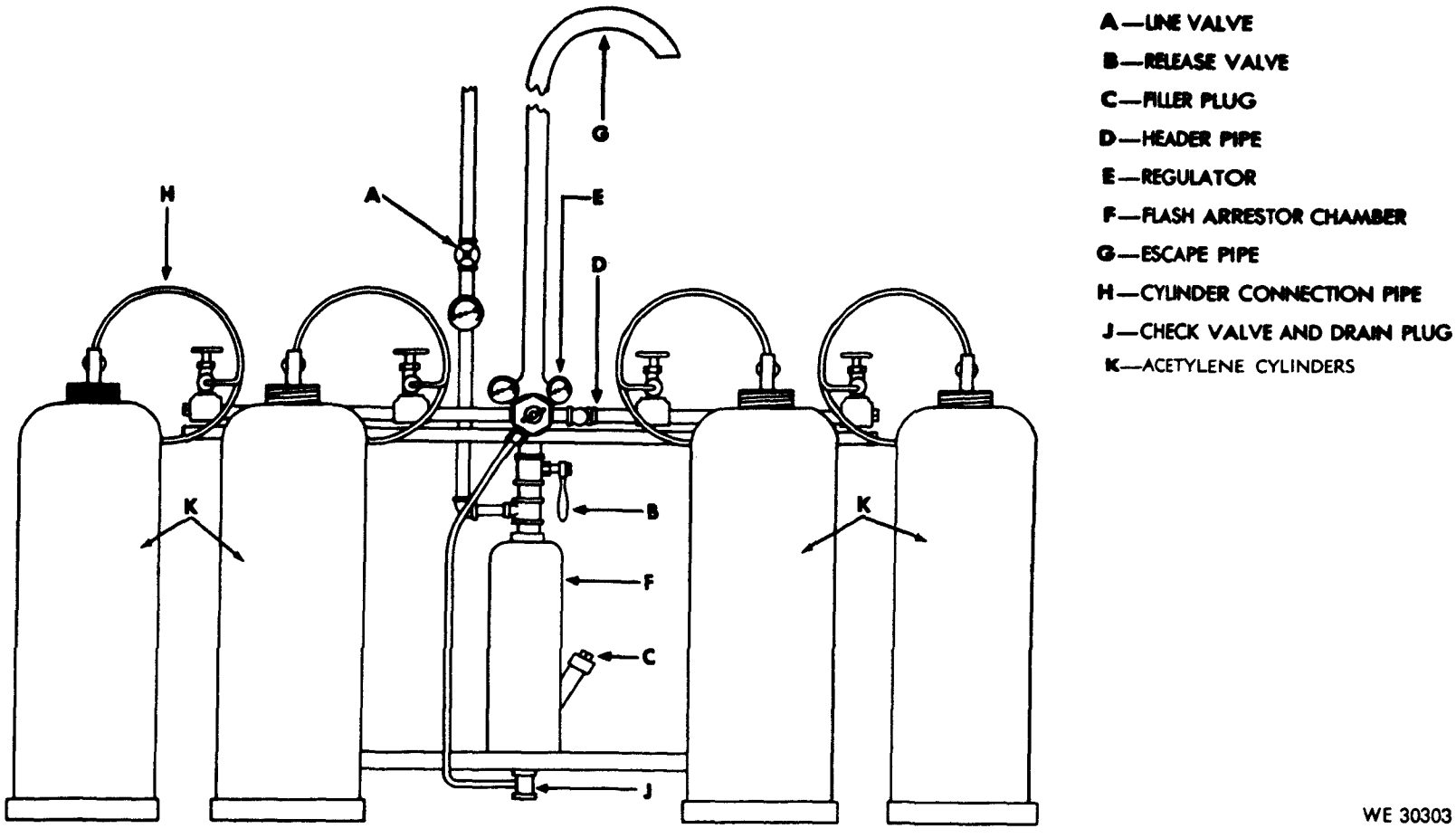

Figure 5–3. Stationary type acetylene cylinder manifold, and other equipment.

equipment. A sludge, consisting of hydrated or slaked lime, settles in the bottom of the generator and is removed by means of a sludge outlet.

5–5. Acetylene Cylinders

a. Acetylene, when not obtained from an acetylene generator, is provided for welding purposes in steel cylinders with capacities of 10, 40, 125, and 225 cubic feet.

b. Acetylene stored in a free state under pressure greater than 15 psi can be made to break down by heat or shock, and possibly explode. Under pressure of 29.4 psi acetylene becomes self explosive and a slight shock will cause it to explode spontaneously. However, when dissolved in acetone it can be compressed into cylinders at pressures up to 250 psi. The acetylene cylinder (fig. 5–6) is filled with porous materials such as balsa wood, charcoal, shredded asbestos, corn pith, or portland cement, in order to decrease the size of the open spaces in the cylinder. Acetone, a clorless, flammable liquid is added until about 40 percent of the porous material is filled. The filler acts as a large sponge which absorbs the acetone, which in turn absorbs the acetylene. In this process the volume of the acetone increases as it absorbs the acetylene, while acetylene, being a gas, decreases in volume.

c. When acetylene is used from a cylinder it should not be drawn off at a continous rate in volumes greater than 50 cubic feet per hour. This precaution is necessary to prevent the drawing off of acetone and the consequent impairment of weld quality. When more than 50 cubic feet per hour is required the cylinder should be manifolded (fig. 5–3).

d. The acetylene cylinders are equipped with safety plugs (fig. 5–6) having a small hole through the center. This hole is filled with a metal alloy which melts at approximately 212 deg F. When a cylinder is overheated the plug will melt and permit the acetylene to escape before a dangerous pressure can build up. The plug hole is too small to permit a flame to burn back into the cylinder if the escaping acetylene should become ignited.

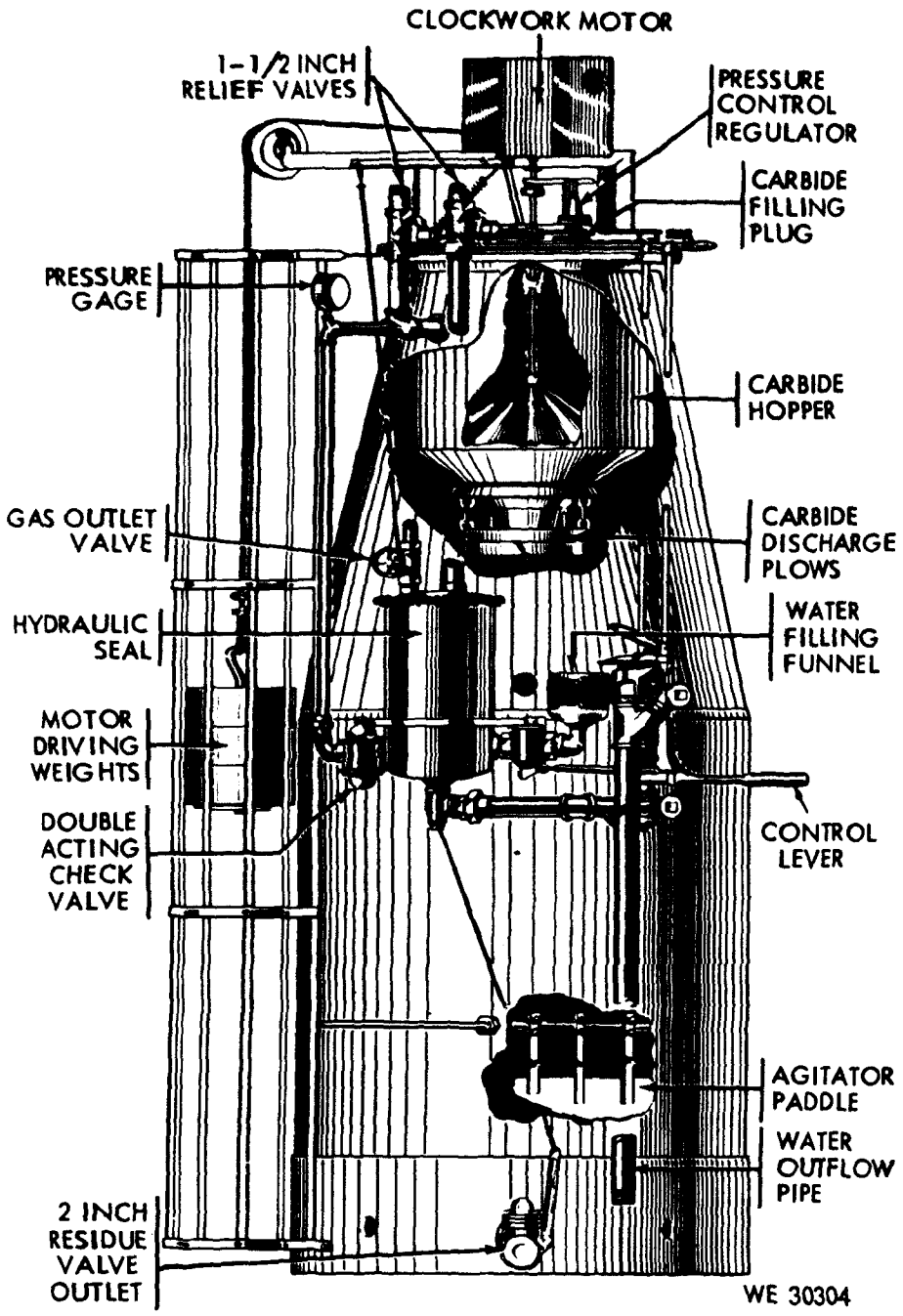

Figure 5–4. Acetylene generator and operating equipment.

e. The brass acetylene cylinder valves have squared stainless steel valve stems which can be fitted with a cylinder wrench and opened or closed when the cylinder is in use. The outlet of the valve is threaded for connection to an acetylene pressure regulator by means of a union nut. The regulator inlet connection gland fits against the face of the threaded cylinder connection and the union nut draws the two surfaces together. Whenever the threads on the valve connections are damaged to a degree that will prevent proper assembly to the regulator, the cylinder should be marked and set aside for return to the manufacturer.

f. A protective metal cap (fig. 5–6) screws onto the valve to prevent damage during shipment or storage.

Cauton: **All acetylene cylinders should be checked, with a soap solution, for leakage at the valves and safety fuse plugs, because the acetylene which would accumulate in the storage room or a confined space is a fire and explosion hazard.**

5–6. Oxygen and its Production

a. Oxygen is a colorless, tasteless, and odorless gas that is slightly heavier than air. It is nonflammable but will support combustion

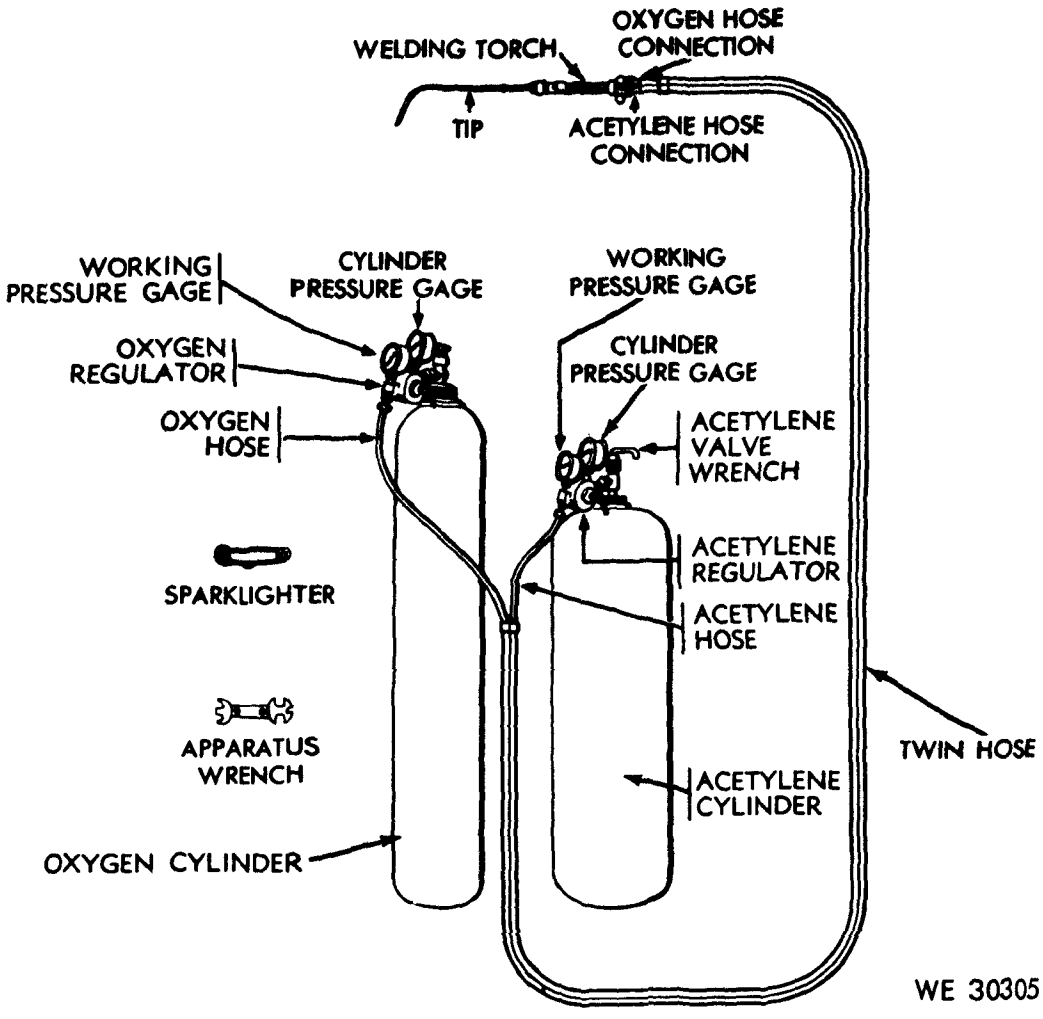

Figure 5–5. Portable oxy-acetylene welding and cutting equipment.

with other elements. In its free state oxygen is one of the most common elements. The atmosphere is made up of approximately 21 parts of oxygen and 78 parts of nitrogen, the remainder being rare gases. Rusting of ferrous metals, discoloration of copper, and the corrosion of aluminum are all due to the action of atmospheric oxygen. This action is known as oxidation.

b. Oxygen is obtained commercially either by the liquid air process or by the electrolytic process.

(1) In the liquid air process air is compressed and cooled to a point where the gases become liquid. As the temperature of the liquid air is raised nitrogen in a gaseous form is given off first, since its boiling point is lower than that of liquid oxygen. These gases, having been separated, are then further purified and compressed into cylinders for use.

(2) In the electrolytic process water is broken down into hydrogen and oxygen by the passage of an electric current. The oxygen collects at the positive terminal and the hydrogen at the negative terminal. Each gas is collected and compressed into cylinders for use.

5–7. Oxygen Cylinders

A typical oxygen cylinder is shown in figure 5–7. It is made of steel and has a capacity of 220 cubic feet at a pressure of 2,000 psi and a temperature of 70 deg F. The attached equipment provided by the oxygen supplier consists of an outlet valve, a removable metal cap for the protection of the valve during shipment or storage, and a low melting point safety fuse plug and disk.

5–8. Oxygen and Acetylene Regulators

The gases compressed in oxygen and acetylene cylinders are at pressures too high for oxy-acetylene welding. Regulators are necessary to reduce pressure and control the flow of gases from the cylinders. Most regulators in use are either the single stage or the two stage type. Check valves should be installed be-

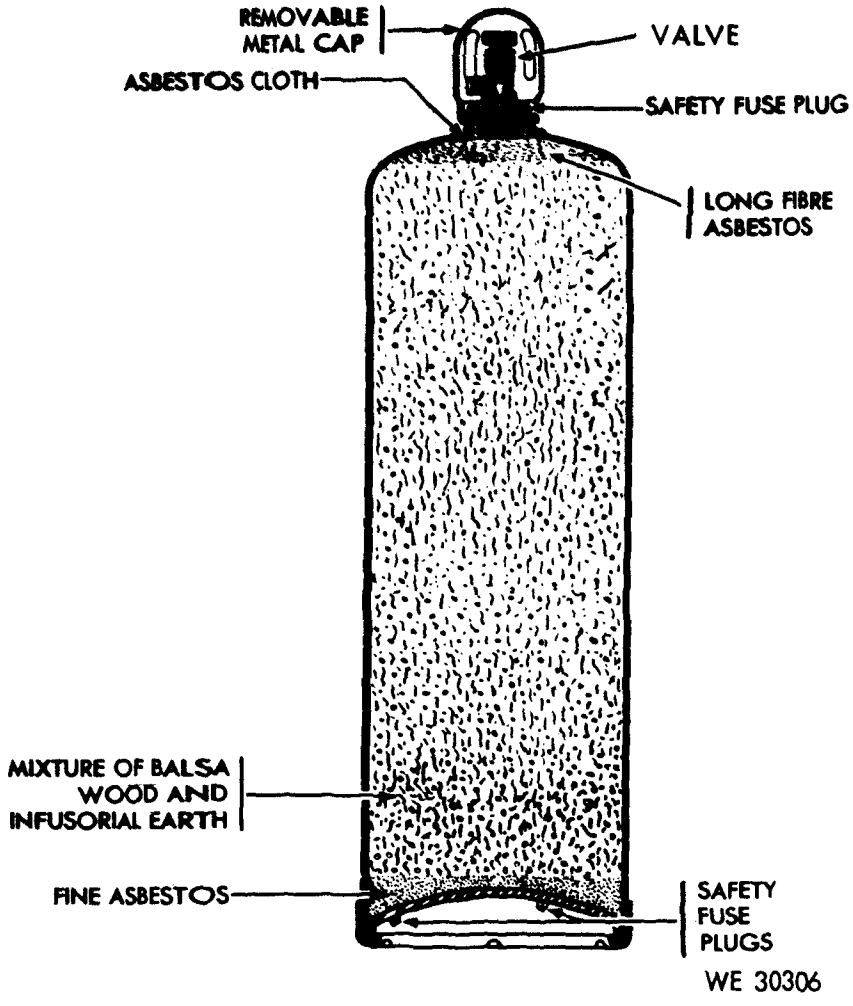

Figure 5-6. Acetylene cylinder construction.

tween the torch hoses and the regulator to prevent backflash through the regulator.

a. *Single Stage Oxygen Regulator.* The mechanism of a single stage regulator (fig. 5–8) has a nozzle through which the high pressure gas passes, a valve seat to close off the nozzle, and balancing springs. Some types have a relief valve and an inlet filter to exclude dust and dirt. Pressure gages are provided to show the pressure in the cylinder or pipe line and the working pressure. In operation the working pressure falls as the cylinder pressure falls. For this reason the working pressure must be adjusted at intervals during welding operations. The oxygen regulator controls and reduces the oxygen pressure from any standard commercial oxygen cylinder containing pressures up to 3,000 psi. The high pressure gage, which is on the inlet side of the regulator, is graduated from 0 to 3000 psi. The low pressure gage, which is on the outlet side of the regulator, is graduated from 0 to 500 psi.

b. *Operation of Single Stage Oxygen Regulator.*

(1) The oxygen enters the regulator through the high pressure inlet connection and passes through a glass wool filter which removes dust and dirt. The seat which closes off the nozzle is not raised until the adjusting screw is turned in. Turning in the adjusting screw applies pressure to the adjusting spring which bears down on the rubber diaphragm. The diaphragm presses downward on the stirrup and overcomes the pressure on the compensating spring. When the stirrup is forced downward the passage through the nozzle is opened, and oxygen is allowed to flow into the low pressure chamber of the regulator. From here the oxygen passes through the regulator outlet and the hose to the torch. A certain set pressure must be maintained in the low pressure chamber of the regulator so that oxygen will continue to be forced through the orifices of the torch, even if the torch needle valve is

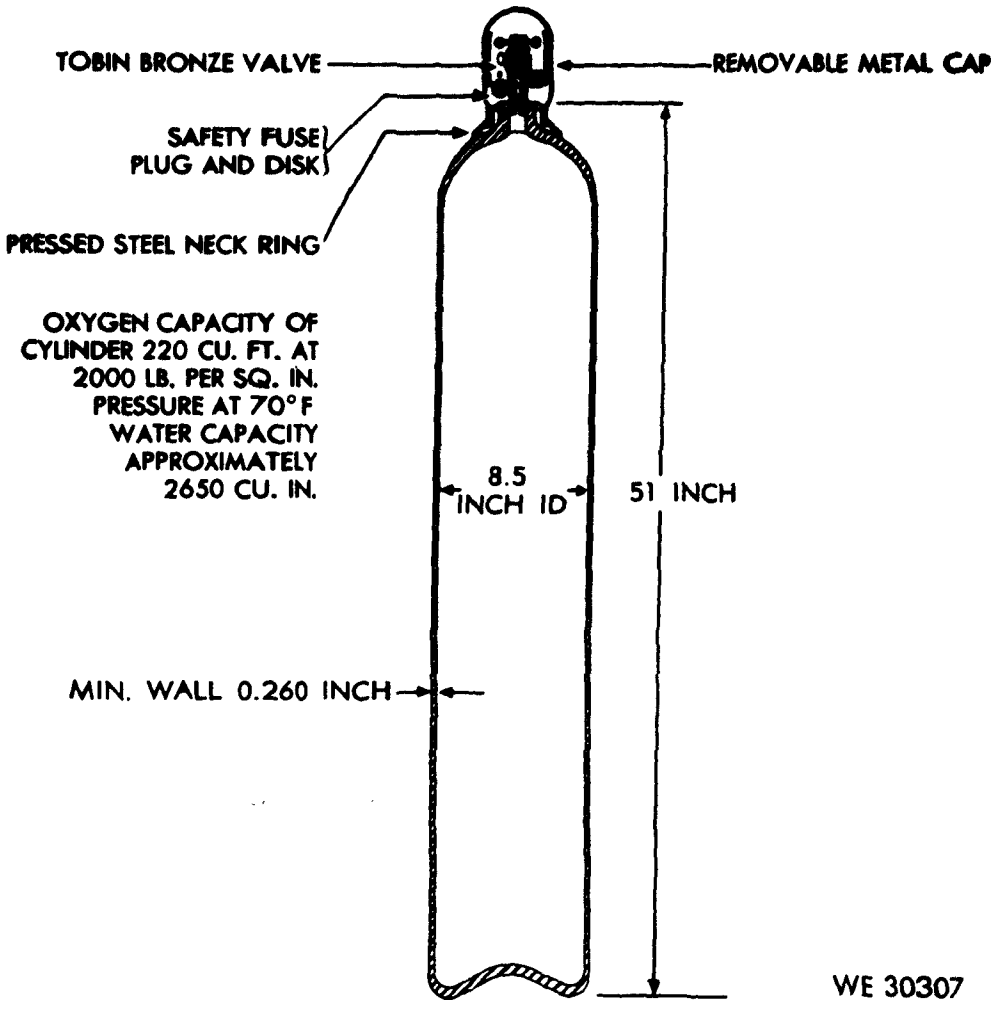
TOBIN BRONZE VALVE
REMOVABLE METAL CAP
SAFETY FUSE PLUG AND DISK
PRESSED STEEL NECK RING
OXYGEN CAPACITY OF CYLINDER 220 CU. FT. AT 2000 LB. PER SQ. IN. PRESSURE AT 70° F WATER CAPACITY APPROXIMATELY 2650 CU. IN.
8.5 INCH ID
51 INCH
MIN. WALL 0.260 INCH
WE 30307

Figure 5–7. Oxygen cylinder construction.

open. This pressure is indicated on the working pressure gage of the regulator and depends on the position of the regulator adjusting screw. The pressure is increased by turning the adjusting screw to the right and decreased by turning this screw to the left.

(2) Regulators used at stations to which gases are piped from an oxygen manifold, acetylene manifold, or acetylene generator have only one low pressure gage because the pipe line pressures are usually set at 15 psi for acetylene and approximately 200 psi for oxygen.

c. *Two Stage Oxygen Regulator.* The operation of the two stage regulator is similar in principle to that of the single stage regulator. The difference is that the total pressure decrease takes place in two steps instead of one. On the high pressure side the pressure is reduced from cylinder pressure to intermediate pressure. On the low pressure side of the pressure is reduced from intermediate pressure to working pressure. Because of the two stage pressure control the working pressure is held constant, and pressure adjustment during welding operations are not required.

d. *Acetylene Regulator.* This regulator controls and reduces the acetylene pressure from any standard commercial cylinder containing pressures up to and including 500 psi. It is of the same general design as the oxygen regulator but will not withstand such high pressures. The high pressure gage, on the inlet side of the regulator, is graduated from 0 to 500 psi. The low pressure gage, on the outlet side of the regulator, is graduated from 0 to 30 psi. Acetylene should not be used at pressures exceeding 15 psi.

5–9. Oxy-Acetylene Welding Torch

a. The oxy-acetylene welding torch is used to mix oxygen and acetylene in definite proportions and to control the volume of these gases burning at the welding tip. The torch has two needle type valves, one for adjusting the flow of oxygen and one for adjusting the flow of acetylene. In addition, there are two

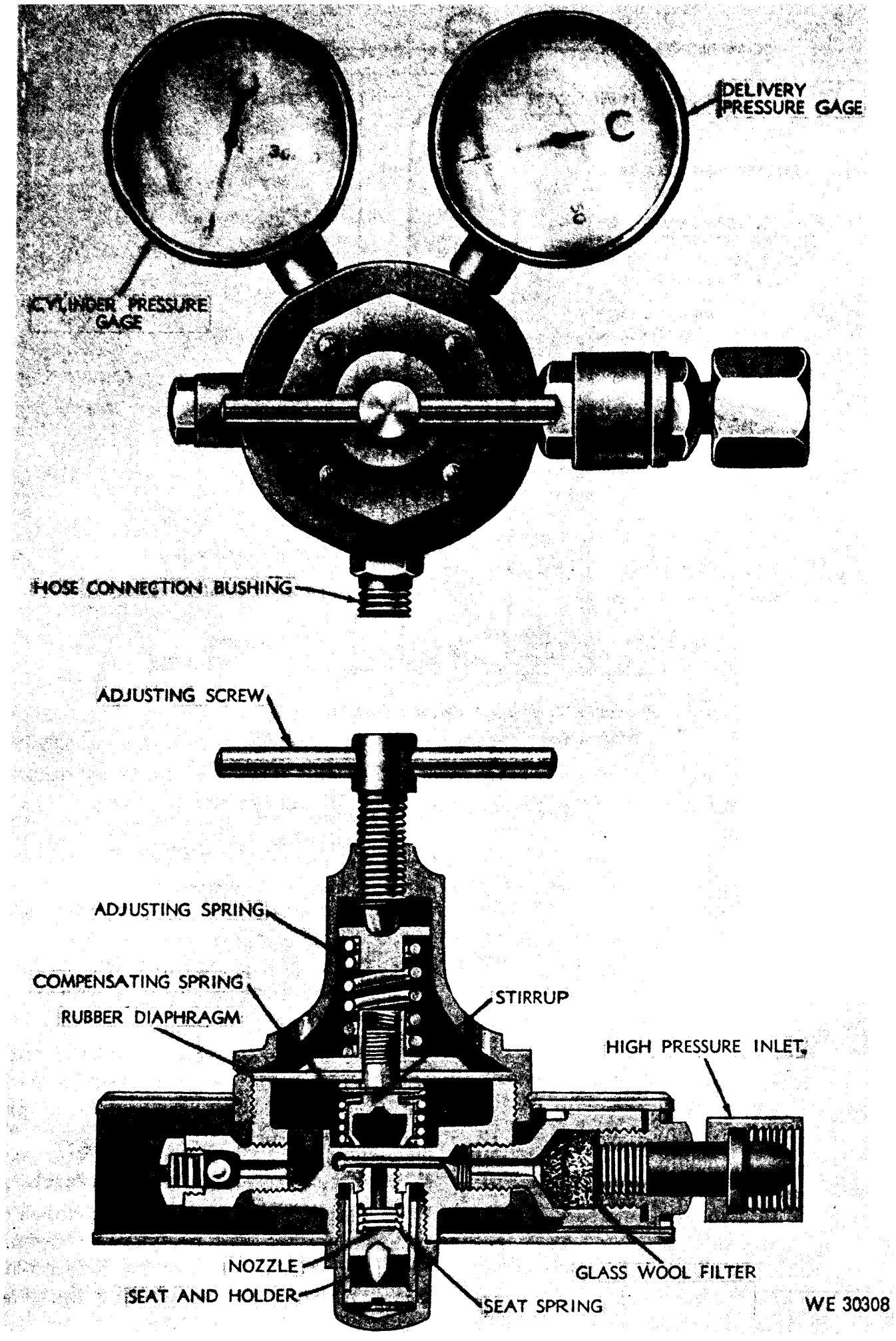

Figure 5–8. Single-stage regulator.

tubes, one for oxygen, the other for acetylene; a mixing head; inlet nipples for the attachment of hoses; a tip; and a handle. The tubes and handle are of seamless hard brass, copper nickel alloy, stainless steel, or other noncorrosive metal of adequate strength. The tips, which are available in different sizes, are described in paragraph 5–10.

b. There are two general types of welding torches; the low pressure or injector type, and the equal pressure type.

(1) In the low pressure or injector type (fig. 5–9) the acetylene pressure is less than 1 psi. A jet of high pressure oxygen is used to produce a suction effect to draw in the required amount of acetylene. This is accomplished by designing the mixer in the torch to operate on the injector principle. The welding tips may or may not have separate injectors designed integrally with each tip.

(2) The equal pressure torch (fig. 5–10) is designed to operate with equal pressures for the oxygen and acetylene. The pressure ranges from 1 to 15 psi. This torch has certain advantages over the low pressure type in that the flame desired can be more readily adjusted, and since equal pressures are used for each gas the torch is less susceptible to flashbacks.

5–10. Welding Tips and Mixers

a. The welding tips, such as are shown in figures 5–9 and 5–10, are made of hard drawn electrolytic copper or 95 percent copper and 5 percent tellurium. They are made in various styles and types, some having a one piece tip either with a single orifice or a number of orifices, and others with two or more tips attached to one mixing head. The diameter of the tip orifices differ in order to control the quantity of heat and the type of flame. These tip sizes are designated by numbers which are arranged according to the individual manufacturers system. In general, the smaller the number, the smaller the tip orifice.

b. Mixers (fig. 5–9 and 5–10) are frequently provided in tip mixer assemblies which assure the correct flow of mixed gases for each size tip. In this tip mixer assembly the mixer is assembled with the tip for which it has been drilled and then screwed onto the torch head. The universal type mixer is a separate unit which can be used with tips of various sizes.

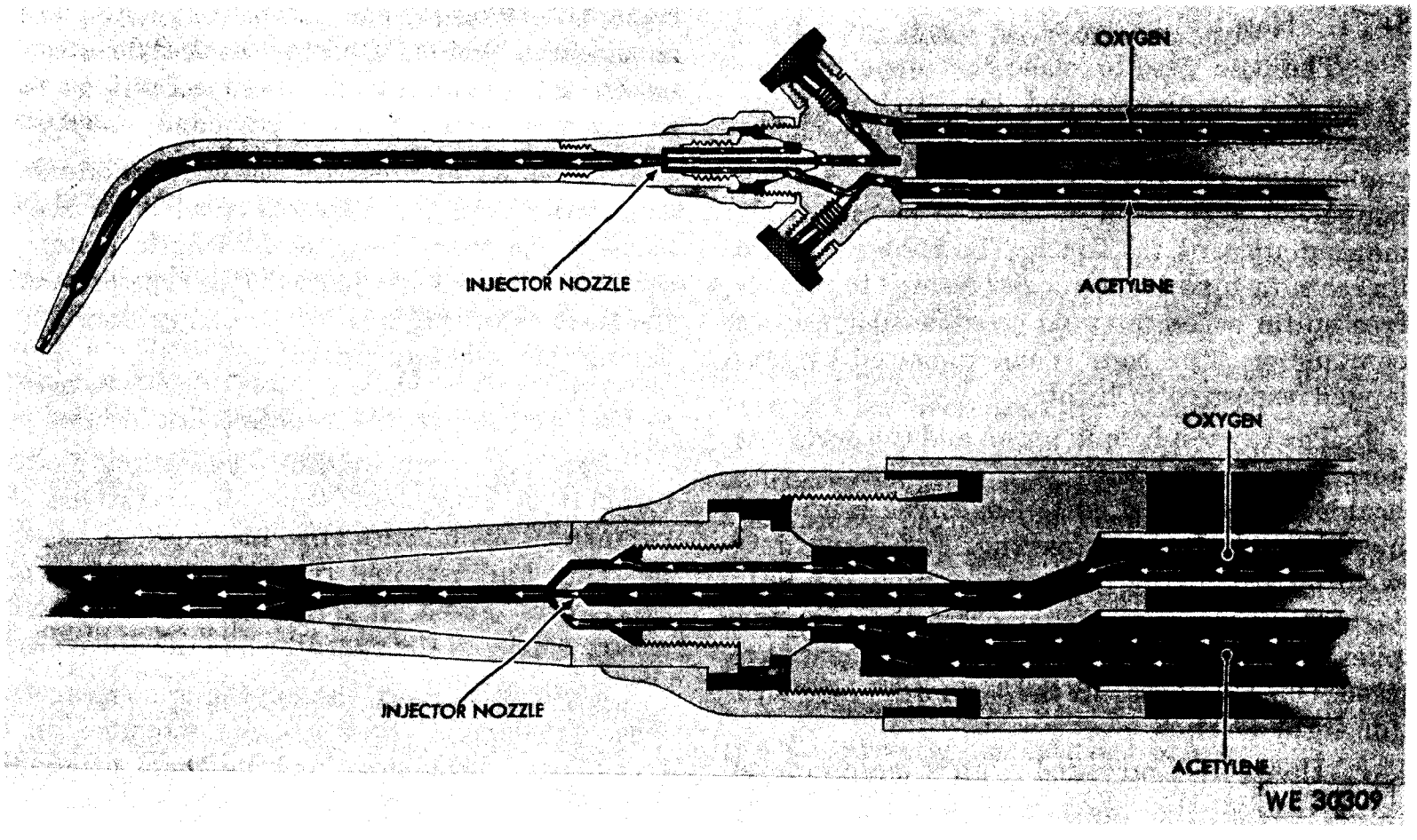

Figure 5–9. Mixing head for injector type welding torch.

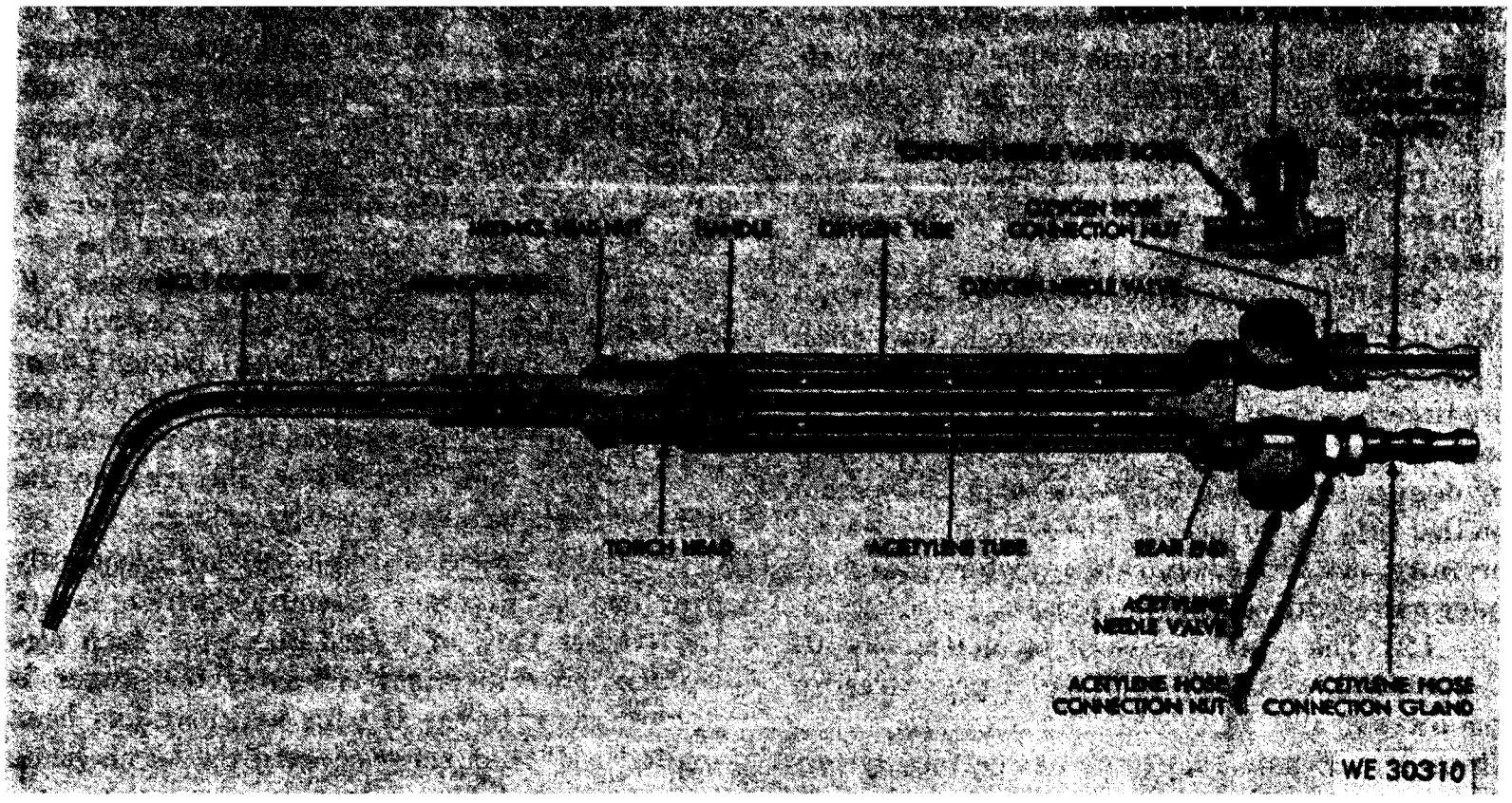

Figure 5–10. Equal pressure type, general purpose welding torch.

5–11. Hose

a. The hose used to make the connection between the regulators and the torch is made especially for this purpose. It is built to withstand high internal pressures. It is strong, nonporous, light, and flexible to permit ready manipulation of the torch. The rubber used in its manufacture is chemically treated to remove free sulfur so as to avoid possible spontaneous combustion. The hose is not impaired by prolonged exposure to light.

b. The oxygen hose is green and the acetylene hose is red. The hose is a rubber tube with braided or wrapped cotton or rayon reinforcements and a rubber covering. For heavy duty welding and cutting operations, requiring ¼ to ½-inch internal diameter hose, three to five plies of braided or wrapped reinforcements are used. One ply is used in the ⅛ to 3/16-inch hose for light torches.

c. Hoses are provided with connections at each end so that they may be connected to their respective regulator outlet and torch inlet connections. To prevent a dangerous interchange of acetylene and oxygen hoses all threaded fittings used for the acetylene hook up are left hand, and all threaded fittings for the oxygen hook up are right hand.

d. Welding and cutting hose is obtainable as a single hose for each gas or with the hoses bonded together along their length under a common outer rubber jacket. This type prevents the hose from kinking or becoming entangled during the welding operation.

5–12. Setting up the Welding Equipment

When setting up welding and cutting equipment it is important that all operations be performed systematically in order to avoid mistakes and possible trouble. The setting up procedures given in a through d below will assure safety to the operator and the apparatus.

a. *Cylinders.* Place the oxygen and the acetylene cylinders, if they are not mounted on a truck, on a level floor and tie them firmly to a work bench, post, wall, or other secure anchorage to prevent their being knocked or pulled over.

(1) Remove the valve protecting caps.

(2) "Crack" the cylinder valves by opening slightly, for an instand, to blow out any dirt or foreign matter that may have accumulated during shipment or storage.

Warning: **Do not stand in front of the valves when opening them.**

(3) Close the valves and wipe off the connection seats with a clean cloth.

b. *Pressure Regulators.* Connect the acetylene regulator to the acetylene cylinder and the oxygen regulator to the oxygen cylinder. Use either a regulator wrench or a close fitting wrench and tighten the connecting nuts sufficiently to prevent leakage.

(1) Connect the red hose to the acetylene regulator and the green hose to the oxygen regulator. Screw the connecting nuts up tightly to insure leakproof seating. Note that the acetylene hose connection has left hand threads.

(2) Release the regulator screws to avoid damage to the regulators and gages. Slowly open the cylinder valves. Read the high pressure gages to check the cylinder gas pressure. Blow out the oxygen hose by turning the regulator screw in and then release the regulator screw.

Warning: **If blowing out the acetylene hose is necessary do it in a well ventilated place, free of sparks, flame, or to other sources of ignition.**

c. *Torch.* Connect the red acetylene hose to the torch needle valve which is stamped AC. Connect the green oxygen hose to the oxygen needle valve which is stamped OX. Test all hose connections for leaks at the regulators or torch valve by turning both regulators screws in with the torch needle valves closed. Release the regulator screws after testing and drain both hose lines by opening the torch needle valves. Slip the tip nut over the mixing head, screw tip into mixing head and assemble in the torch body. Tighten by hand and adjust the tip to the proper angle. Secure this adjustment by tightening with the tip nut wrench.

d. *Adjustment of Working Pressure.* Adjust the acetylene working pressure by opening the acetylene needle valve in the torch and turning the regulator screw to the right, then adjust the acetylene regulator to the required pressure for the tip size to be used (see table 10 and 11, chap. 6). Close the needle valve. Adjust the oxygen working pressure in the same manner.

5–13. Shutting Down Welding Apparatus

a. Shut off the gases. First close the acetylene valve and then the oxygen valve on the torch. Then close the acetylene and oxygen cylinder valves.

b. Drain the regulators and hoses by the procedures outlined below.

(1) Open the torch acetylene valve until the gas stop flowing, then close the valve.

(2) Next open the torch oxygen valve to drain the oxygen regulator and hose. When gas stops flowing, close the valve.

(3) When the above operations are performed properly both high and low pressure gages on the acetylene and oxygen regulators will register zero.

c. Release the tension on both regulator screws by turning the screws to the left until they rotate freely.

d. Coil the hoses without kinking them and suspend them on a suitable holder or hanger. Avoid upsetting the cylinders to which they are attached.

5–14. Regulator Malfunctions and Corrections

a. Leakage of gas between the regulator seat and the nozzle is the principle trouble encountered with regulators. It is indicated by a gradual increase in pressure on the working pressure gage when the adjusting screw is fully released or is in position after adjustment. This defect, called "creeping regulator", is caused by bad valve seats or by foreign matter lodged between the seat and the nozzle.

Warning: **Regulators with such leaks should be repaired immediately to avoid damage to other parts of the regulator or injury to personnel. With acetylene rgulators this leakage is particularly dangerous because acetylene at high pressure in the hose is an explosion hazard.**

b. The leakage of gas, as described above, can be corrected as outlined below:

(1) Remove and replace the seat if it is worn, cracked, or otherwise damaged.

(2) If the malfunction is caused by foul-

ing with dirt or other foreign matter, clean the seat and nozzle thoroughly and blow out any dust or dirt in the valve chamber.

c. The procedure for removing valve seats and nozzles will vary with the make or design.

d. Broken or buckled gage tubes and distorted or buckled diaphragms are usually caused by backfire at the torch, leaks across the regulator seats, or by failure to release the regulator adjusting screw fully before opening the cylinder valves.

(1) Defective bourdon tubes in the gages are indicated by improper action of the gages or by escaping gas from the gage case. Gages with defective bourdon tubes should be removed and replaced by new gages because satisfactory repairs cannot be made without special equipment.

(2) Buckled or distorted diaphragms cannot be adjusted properly and should be replaced with new ones. Rubber diaphragms can be replaced easily by removing the spring case with a vise or wrench. Metal diaphragms are sometimes soldered to the valve case and their replacement is a factory or special repair shop job. It should not be attempted by anyone unfamiliar with the work.

5–15. Torch Malfunctions and Corrections

Improper functioning of welding torches is usually due to one or more of the following causes: leaking valves, leaks in the mixing head seat, scored or out-of-round welding tip orifices, clogged tubes or tips, and damaged inlet connection threads. Corrective measures for these common torch defects are described below:

***Warning:* These defects are the source of gas leaks and unless corrected immediately may cause flashbacks or backfires, with resultant injury to the operator and/or damage to the welding apparatus.**

a. *Leaking Valves.* This condition is due to worn or bent valve stems, damaged seats, or a combination of both. Loose packing will also cause leaks around the valve handle. Such leaks are indicated when the gases continue to flow after the valves are closed.

(1) Bent or worn valve stems should be replaced and damaged seats should be refaced.

(2) Loose packing may be corrected by tightening the packing nut or by installing new packing and then tightening the packing nut.

b. *Leaks in the Mixing Heads.* This condition is indicated by the popping out of the flame and by emission of sparks from the tips accompanied by a sequealing noise. Leaks in the mixing head will cause improper mixing of the oxygen and acetylene which will cause flashbacks; i.e., ignition and burning of the gases back of the mixing head in the torch tubes. A flashback causes the torch head and handle to suddenly become very hot. This defect is corrected by reaming out and truing the mixing head seat.

***Caution:* This work should be done by the manufacturer because special reamers are required for truing these seats.**

c. *Scored or Out-Of-Round Tip Orifices.* Tips in this condition will cause the flame to be irregular even after the tip has been thoroughly cleaned. They cannot be repaired and must be replaced.

d. *Clogged Tubes and Tips.* This condition is due to carbon deposits caused by flashbacks, backfire, or to the presence of foreign matter that has entered the tubes through the hoses. If the tubes or tips are clogged greater working pressures will be needed to produce the flame required for a given tip. The flame produced will be distorted.

(1) To correct this condition the torch should be disassembled so that the tip, mixing head, valves, and hose can be cleaned and blown out with oxygen at pressure of 20 to 30 psi.

(2) The tip and mixing head should be cleaned either with a cleaning drill of the proper size, soft copper or brass wire, and then blown out with oxygen. The cleaning drills should be approximately one drill size smaller than the tip orifice to avoid enlarging the orifice during cleaning.

e. *Damaged Inlet Connection Threads.* Leaks due to damaged inlet connection threads can be detected by closing the cylinder valves and keeping the needle valves closed. Such leaks will cause the regulator pressure to drop. Also, if the threads are damaged, the hose connection at the torch inlet will be difficult or impossible to tighten.

***Warning:* Unless corrected this condition may cause fires by ignition of the leaking gas,**

with resultant injury to the welding operator and/or damage to the equipment.

To correct this defect the threads should be recut and the hose connections thoroughly cleaned.

Section II. OXY-ACETYLENE CUTTING EQUIPMENT

5–16. Cutting Torch and Other Cutting Equipment

a. The cutting torch (fig. 5–11) like the welding torch has a tube for oxygen and one for acetylene; in addition, there is a tube for high pressure oxygen together with a cutting tip or nozzle. The tip (fig. 5–12) is provided with a center hole through which a jet of pure oxygen passes. Mixed oxygen and acetylene pass through holes surrounding the center hole for the preheating flames. The number of orifices for oxy-acetylene flames ranges from two to six, depending on the purpose for which the tip is used. The cutting oxygen is controlled by a tripper or lever operated valve. The cutting torch is furnished with interchangeable tips for cutting steel from less than ¼-inch to more than 12 inches in thickness.

b. A cutting attachment fitted to a welding torch in place of the welding head is shown in figure 5–13.

c. In order to make uniformly clean cuts on steel plate, motor driven cutting machines are used to support and guide the cutting torch. Straight line cutting or beveling is accomplished by guiding the machine along a straight line on steel tracks. Arcs and circles are cut by guiding the machine with a radius rod pivoted about a central point. Typical cutting machines in operation are shown in figures 5–14 and 5–15.

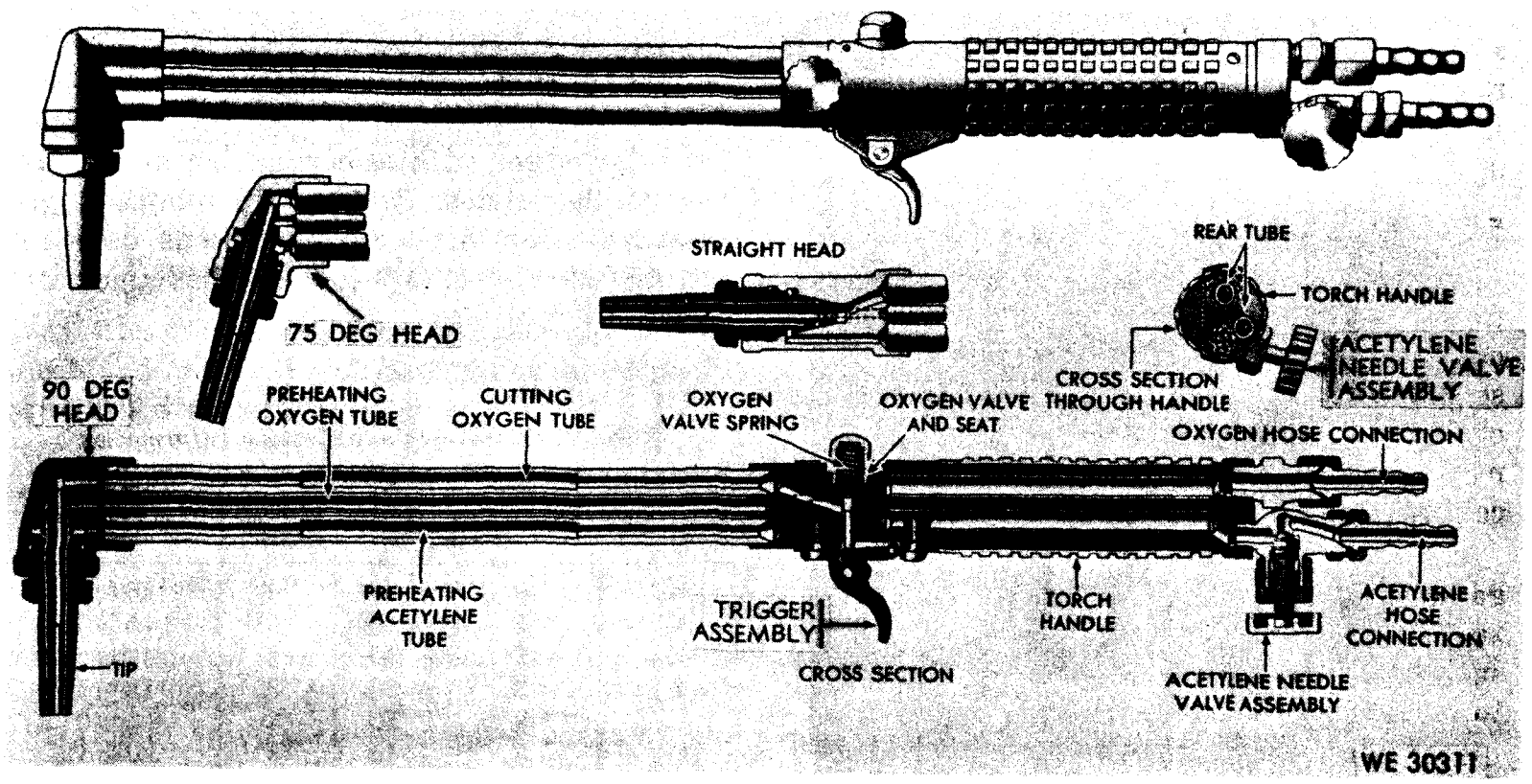

Figure 5–11. The cutting torch.

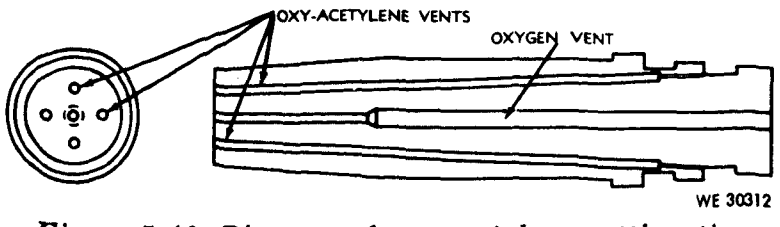

Figure 5–12. Diagram of oxy-acetylene cutting tip.

d. There is a wide variety of cutting tip styles and sizes available to suit various types of work. The thickness of the material to be cut generally governs the selection of the tip. The cutting oxygen pressure, cutting speed, and preheating intensity should be controlled to produce narrow, parallel sided kerfs. Cuts

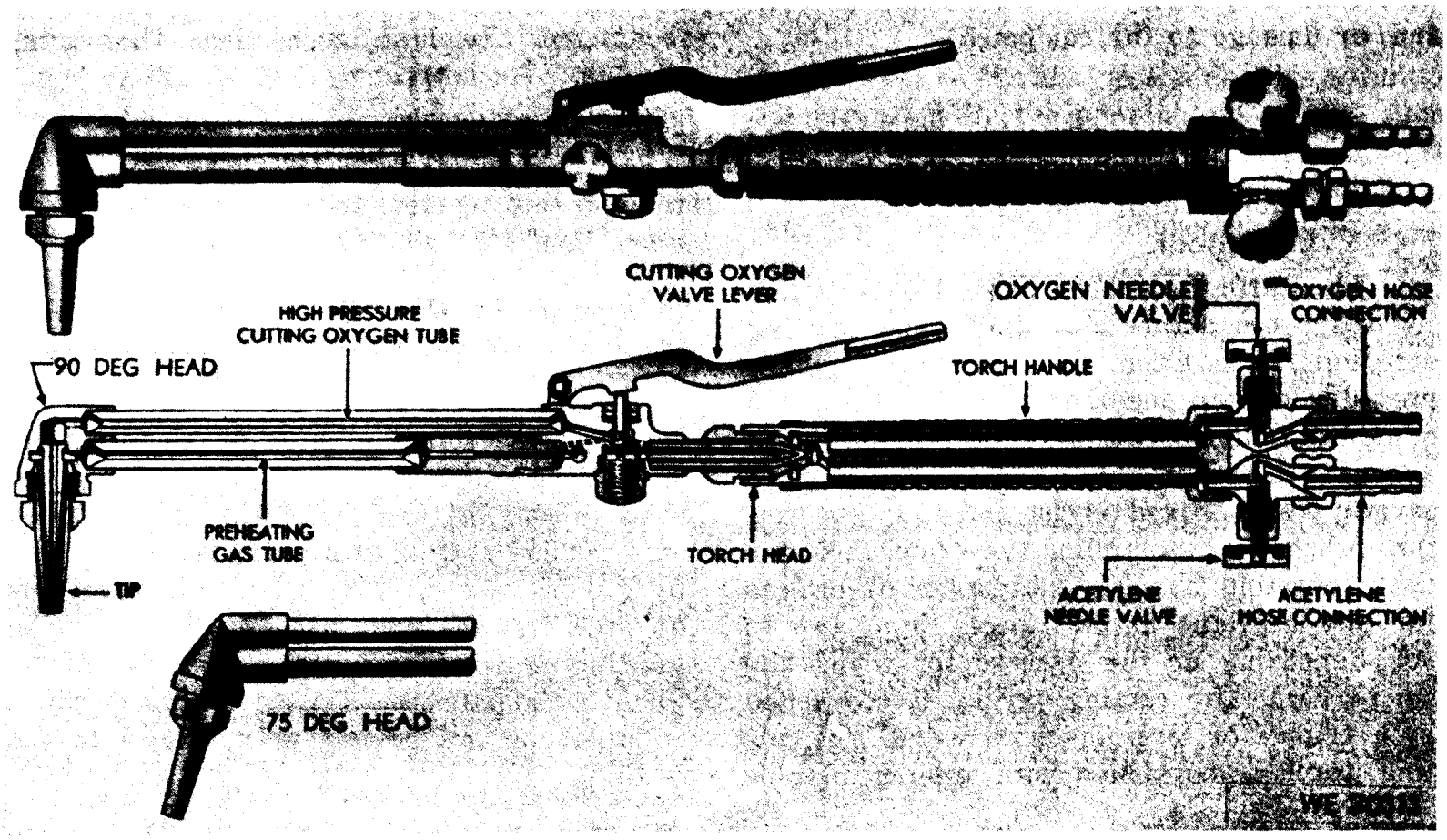

Figure 5–13. Cutting attachment for welding torch.

that are improperly made will produce ragged, irregular edges with adhering slag at the bottom of the plates. Cutting tip numbers, gas pressures, and hard cutting speeds used for cutting mild steel up to 12-inches thick are shown in table 9.

Figure 5–14. Making a bevel on a circular path with a cutting machine.

Table 9. Oxy-Acetylene Cutting Information

Plate Thickness (in.)	Cutting Tip[1] (size number)	Oxygen (psi)	Acetylene (psi)	Handcutting speed (in. per minute)
¼	0	30	3	16 to 18
⅜	1	30	3	14.5 to 16.5
½	1	40	3	12 to 14.5
¾	2	40	3	12 to 14.5
1	2	50	3	8.5 to 11.5
1½	3	45	3	6.0 to 7.5
2	4	50	3	5.5 to 7.0
3	5	45	4	5.0 to 6.5
4	5	60	4	4.0 to 5.0
5	6	50	5	3.5 to 4.5
6	6	55	5	3.0 to 4.0
8	7	60	6	2.5 to 3.5
10	7	70	6	2.0 to 3.0
12	8	70	6	1.5 to 2.0

[1] Various manufacturers do not adhere to the numbering of tips as set forth in this table, therefore, some tips may carry different identification numbers.

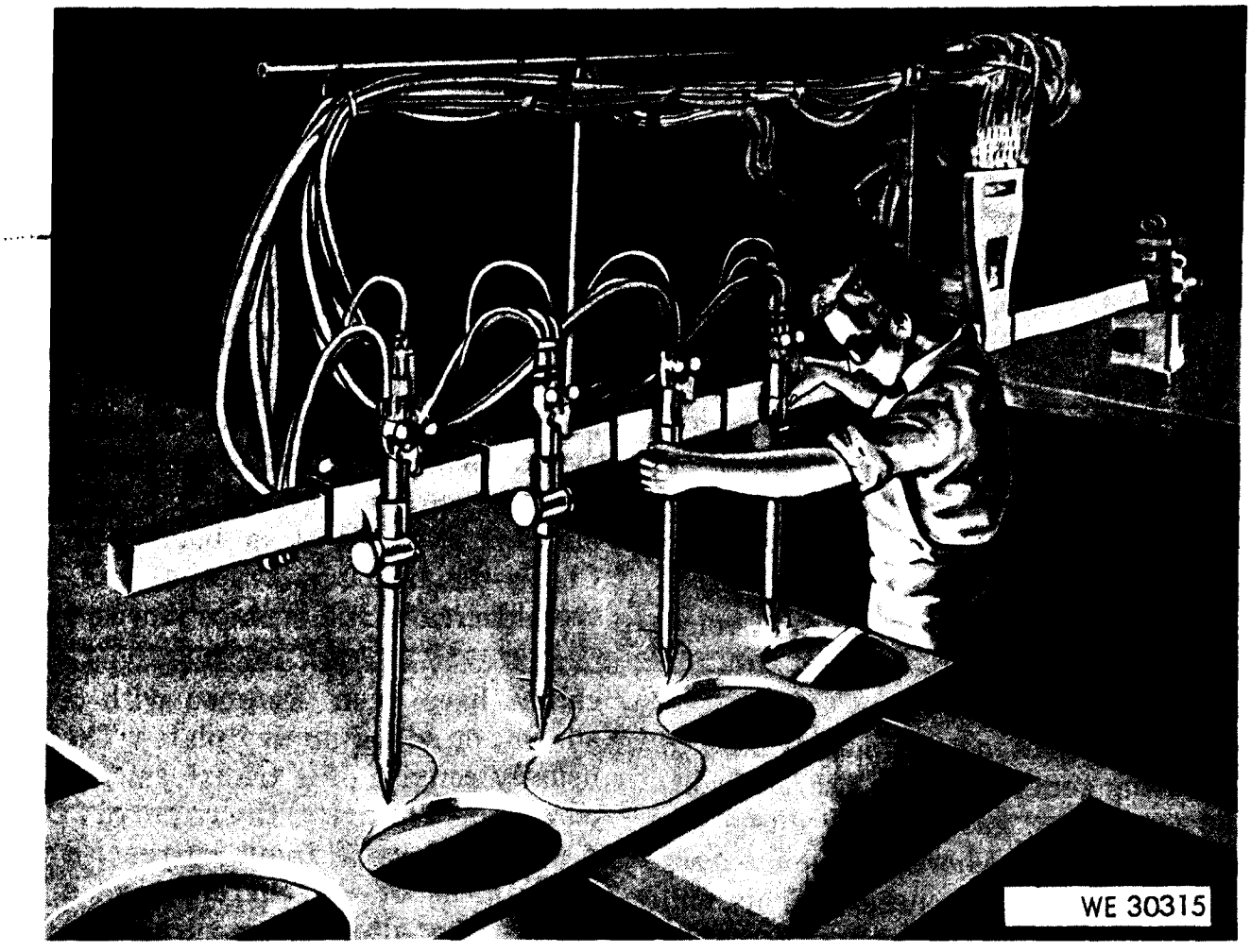

Figure 5–15. Machine for making four oxy-acetylene cuts simultaneously.

5–17. Operation of Cutting Equipment

a. Attach the required cutting tip to the torch and adjust the oxy-acetylene pressure in accordance with table 9.

b. Adjust the preheating flame to neutral.

c. Hold the torch so that the cutting oxygen lever or trigger can be operated with one hand. Use the other hand to steady and maintain the position of the torch head to the work. Keep the flame at 45 deg to the work in the direction of travel, with the inner cones of the preheating flames about 1/16-inch above the end of the line to be cut. Hold this position until the spot has been raised to a bright red heat and then slowly open the cutting oxygen valve.

d. If the cut has been started properly a shower of sparks will fall from the opposite side of the work. Then move the torch at a speed which will allow the cut to continue penetrating the work. A good cut will be clean and narrow.

e. When cutting billets, round bars, or heavy sections, time and gas are saved if a bur is raised with a chisel at the point where the cut is to start. This small portion will heat quickly and cutting will start immediately. A welding rod can also be used to start a cut on heavy sections. When so used, it is called a "starting rod".

Section III. ARC WELDING EQUIPMENT AND ACCESSORIES

5–18. General

The wire wound equipment required for arc welding depends on the source from which the electric power is obtained. It the power is obtained from public utility lines one or more of the following devices are required: transformers (of which there are several types), rectifiers, motor generators, and control equip-

ment. If public utility power is not available, portable generators driven by gasoline or diesel engines are used.

5–19. Direct-Current Arc-Welding Machines

a. The direct-current welding machine has a heavy duty direct current generator. The generators are made in six standardized ratings for general purposes as shown below:

(1) The machines rated 150 and 200 amperes, 30 volts, are used for light shielded metal arc welding and for inert gas metal arc welding. They are also used for general purpose job shop work.

(2) The machines rated 200, 300, and 400 amperes, 40 volts, are used for general welding purposes by machine or manual application.

(3) Machines rated 600 amperes, 40 volts, are used for submerged-arc welding and for carbon-arc welding.

b. The electric motors most commonly used to drive the welding generators are 220/440 volt, 3 phase, 60 cycle. The gasoline and diesel engines should have a rated horsepower in excess of the rated output of the generator. This will allow for the rated overload capacity of the generator and for the power required to operate the accessories of the engine. The simple equation $HP = \frac{1.25+P}{746}$ can be used; HP is the engine horsepower and P is the generator ratings in watts. For example, a 20 horsepower engine would be used to drive a welding generator with a rated 12 kilowatt output.

c. In most direct current welding machines the generator is of the variable voltage type, and is so arranged that the voltage is automatically adjusted to the demands of the arc. However, the voltage may be set manually with a rheostat.

d. The welding current amperage is also manually adjustable and is set by means of a selector switch or series of plug receptacles. In either case the desired amperage is obtained by tapping into the generator field coils. When both voltage and amperage of the welding machine are adjustable the machine is known as a dual control type. Welding machines are also manufactured in which current controls are maintained by movement of the brush assembly.

e. A welding machine equipped with an exciter generator is described in TM 5–3431–214–15, and illustrated in fig. 5–16.

f. A maintenance schedule should be set up to keep the welding machine in good operating condition. The machine should be thoroughly inspected every 3 months and blown free of dust with clean, dry, compressed air. At least once each year the contacts of the motor starter switches and the rheostat should be cleaned and replaced if necessary. Brushes should be inspected frequently to see if they are making proper contact on the commutator, and that they move freely in the brush holders. Clean and true the commutator with sandpaper or a commutator stone if it is burned or roughened. Check the bearings twice a year. Remove all the old grease and replace it with new greases.

g. Direct current rectifier type welding machines have been designed with copper oxide, silicon, or selenium dry plates. These machines usually consist of a transformer to reduce the power line voltage to the required 220/240 volts, 3 phase, 60 cycle input current; a reactor for adjustment of the current; and a rectifier to change the alternating current to direct current. Sometimes another reactor is used to reduce ripple in the output current.

5–20. Alternating-Current Arch-Welding Machines

a. Practically all of the alternating-current arc-welding machines in use are of the single operator static transformer type. For manual operation in industrial applications machines having 200, 300, and 400 ampere ratings are the sizes in general use. Machines with a 150 ampere rating are sometimes used in light industrial, garage, and job shop welding.

b. The transformers are generally equipped with arc stabilizing capacitors. Current control is provided in several ways. One such method is by means of an adjustable reactor in the output circuit of the transformer; in other types the internal reactions of the transformer are adjustable. A handwheel, usually installed on top of the machine, makes possible continuous adjustment of the output current without steps.

c. The screws and bearings on machines with screw type adjustments should be lubricated

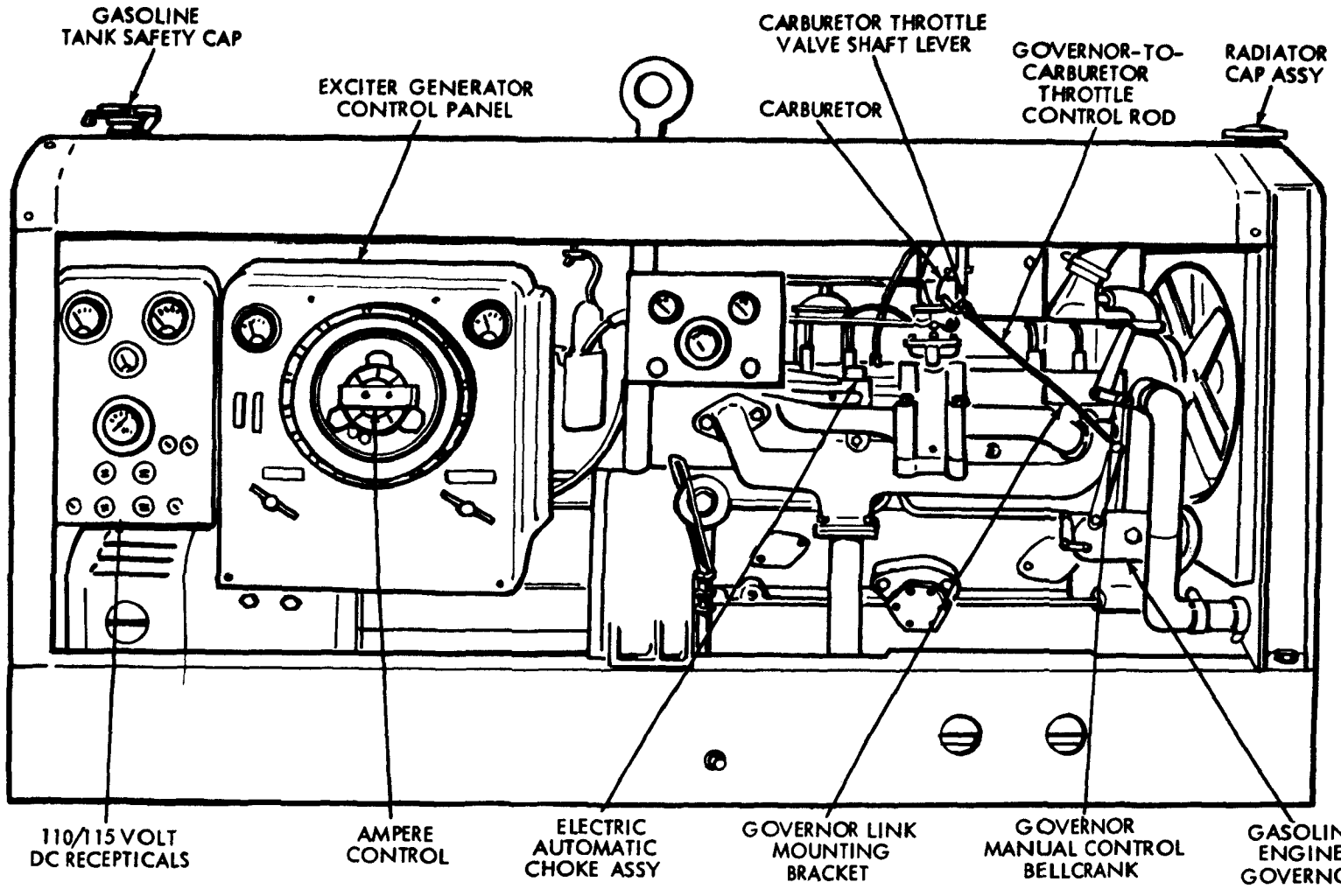

Figure 5–16. Direct current welding machine.

every 3 months. The same lubrication schedule will apply to chain drives. Contactors, switches, relays, plug and jack connections should be inspected every 3 months and cleaned or replaced as required. The primary input current at no load should be measured and checked once a year to make certain that the power factor connecting capacitors are working, and that the input current is as specified on the nameplate or in the manufacturer's instruction book.

5–21. Welding Gun

The essential hookup of the consumable electrode inert-gas technique is shown in fig. 5–17. The 115 volt ac or dc is used to energize the voltage control box which controls the welding current and the feed of the filler wire in the gun. The argon gas is carried by hose to the gun. A solenoid valve in the control box will stop the flow of gas and the wire feed mechanism whenever the welding current is interrupted or the welding gun trigger is released. The control box contains a manual rheostat which sets the reversed polarity voltage to the gun. The gun has a dc motor mechanism which automatically feeds the filler wire to the work at a rate determined by the chosen welding current. The voltage in the pickup cable between the work and the control box keeps the elements of the control box energized during normal welding conditions. Figure 5–18 shows the basic elements of a consumable electrode welding gun. The wire from the spool is inserted through the wire inlet until it is behind the pressure roll. The argon gas and the electrode cable are carried in the same line.

5–22. Other Welding Equipment

a. *Cables.* Two welding cables of sufficient current carrying capacity with heavy, tough, and resilient rubber jackets are required. One of the cables should be composed of fine copper strands to impart as much flexibility as the size of the cable will permit. One end of the

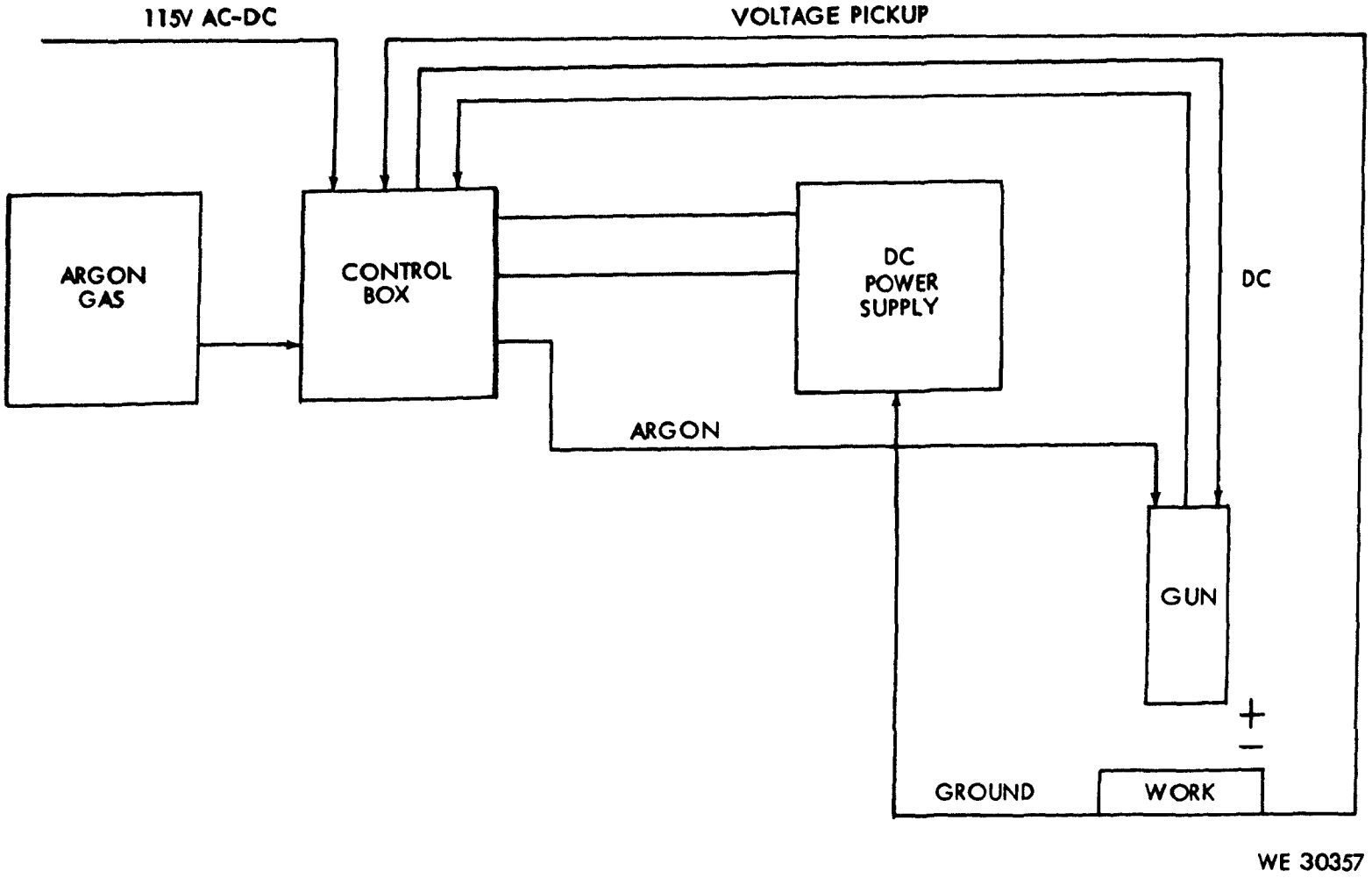

Figure 5–17. Argon and electric circuits.

less flexible cable is attached to the ground lug or positive side of the direct current welding machine; the other end to the work table or other suitable ground. One end of the flexible cable is attached to the electrode holder and the other end to the negative side of a direct current welding machine for straight polarity. For reverse polarity the cables are reversed at the machine; that is, the holder is positive and the work is negative. Some machines are equipped with a polarity switch which is used to change the polarity without interchanging the welding cables at the terminals of the machine.

b. *Electrode Holders.* An electrode holder is an insulated clamping device for holding the electrode during the welding operation. The design of the holder depends on the welding process for which it is used as explained below.

(1) *METAL-ARC ELECTRODE HOLDER.* This is an insulated clamp in the jaws of which a metal electrode can be held at any desired angle. The jaws can be opened by means of a lever held in place by a spring (fig. 5–19).

(2) *ATOMIC-HYDROGEN TORCH.* This electrode holder or torch consists of two tubes in an insulated handle, through which both hydrogen gas and electric current flow. The hydrogen is supplied to a tube in the rear of the handle from which it is led into the two current carrying tubes by means of a manifold. One of the two electrode holders is movable, and the gap between this and the other holder is adjusted by means of a trigger on the handle (fig. 5–20).

(3) *CARBON-ARC ELECTRODE HOLDER.* This holder is manufactered in three specific types. One type holds two electrodes and is similar in design to the atomic hydrogen torch, but has no gas tubes; a second type is a single electrode holder equipped with a heat shield; the third type is for high amperage welding and is water cooled.

(4) *INERT-GAS, TUNGSTER-ARC WELDING ELECTRODE HOLDER.* This is

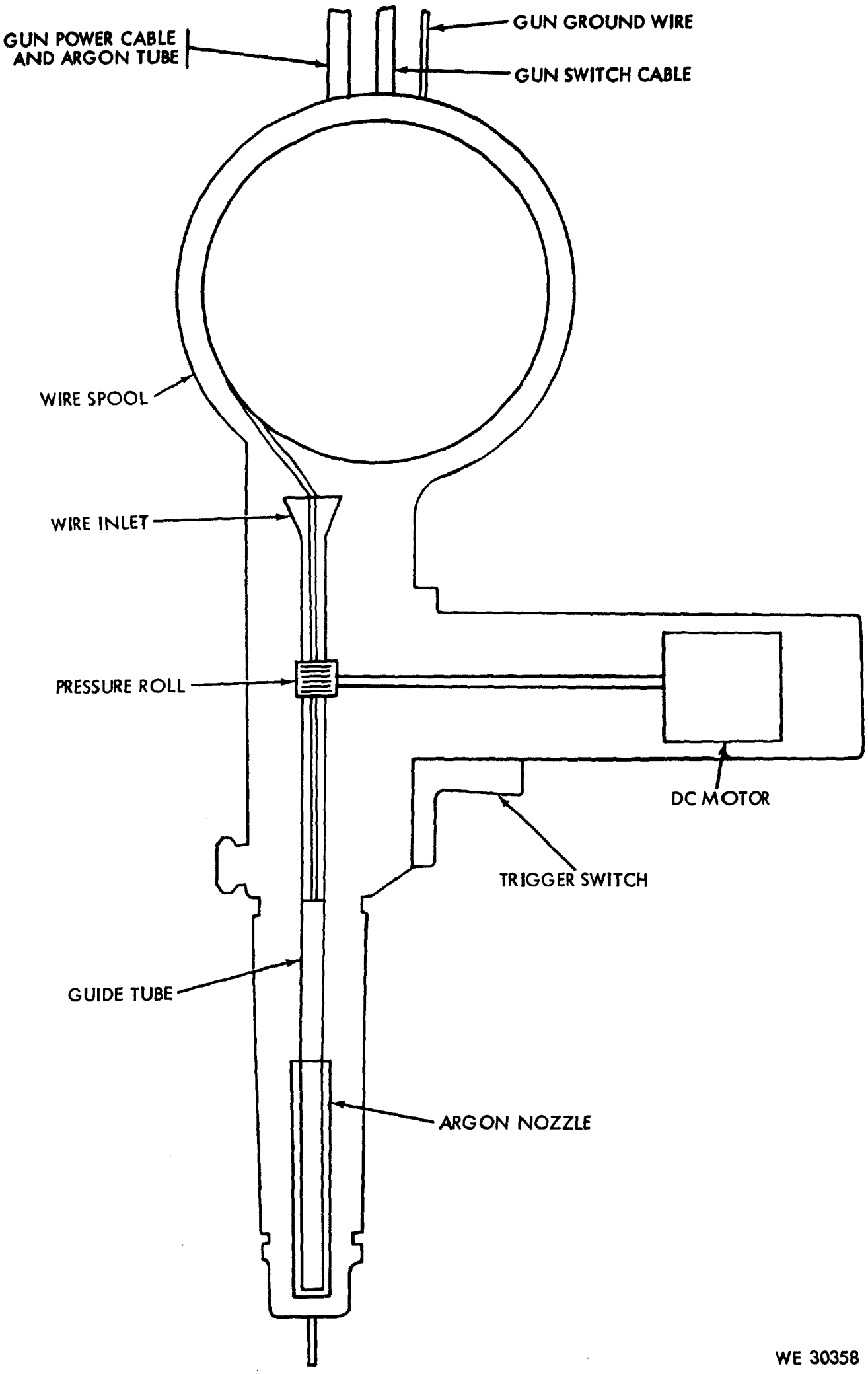

Figure 5–18. Welding gun.

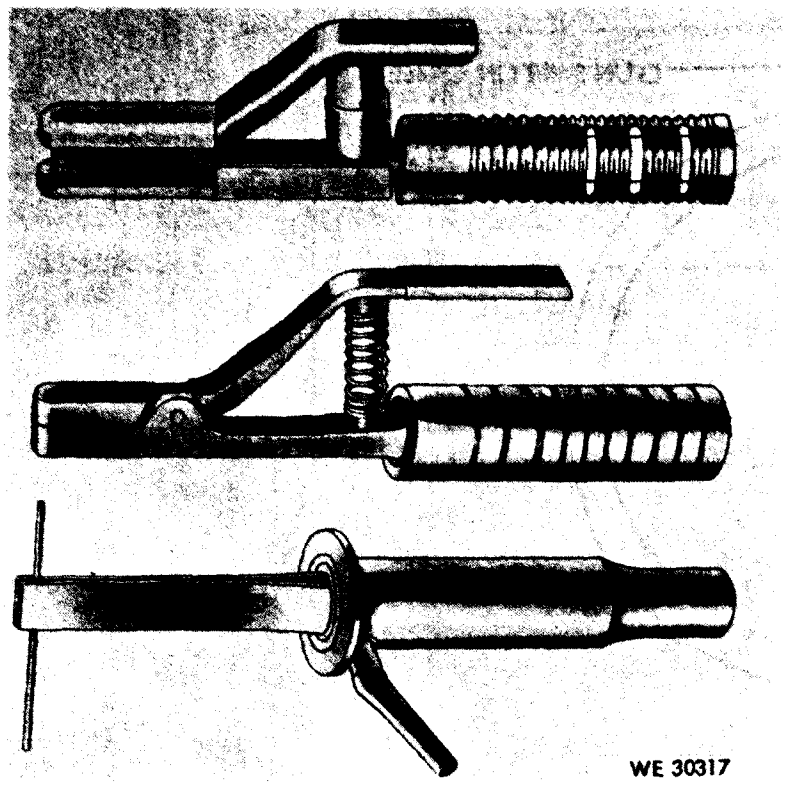

Figure 5–19. Metal-arc welding electrode holders.

an electrode holder of rather complex design in which the electrode is held in a clamping device which also serves as a carrier for the inert gas, the electric current, and the water cooling tube (fig. 5–21).

c. *Accessories.*

(1) *CHIPPING HAMMER AND WIRE BRUSH.* A chipping hammer is required to loosen scale, oxides, and slag. A wire brush is used to clean each weld bead before further welding. Figure 5–22 shows a chipping hammer with an attachable wire brush.

(2) *WELDING TABLE.* A welding table should be of all steel construction. A container for electrodes with an insulated hook to hold the electrode holder when not in use should be provided. A typical design for a welding table is shown in figure 5–23.

(3) *CLAMPS AND BACK-UP BARS.* Work for welding should be clamped in position with C-clamps or other clamp brackets. Blocks, strips, or bars of copper or cast iron should be available for use as backup bars in welding light sheet aluminum and in making certain types of joints. Carbon blocks, asbestos, and fire clay should also be available. These materials are used to form molds that are used to hold molten metal within given limits when building up sections. A mixture of water, glass,

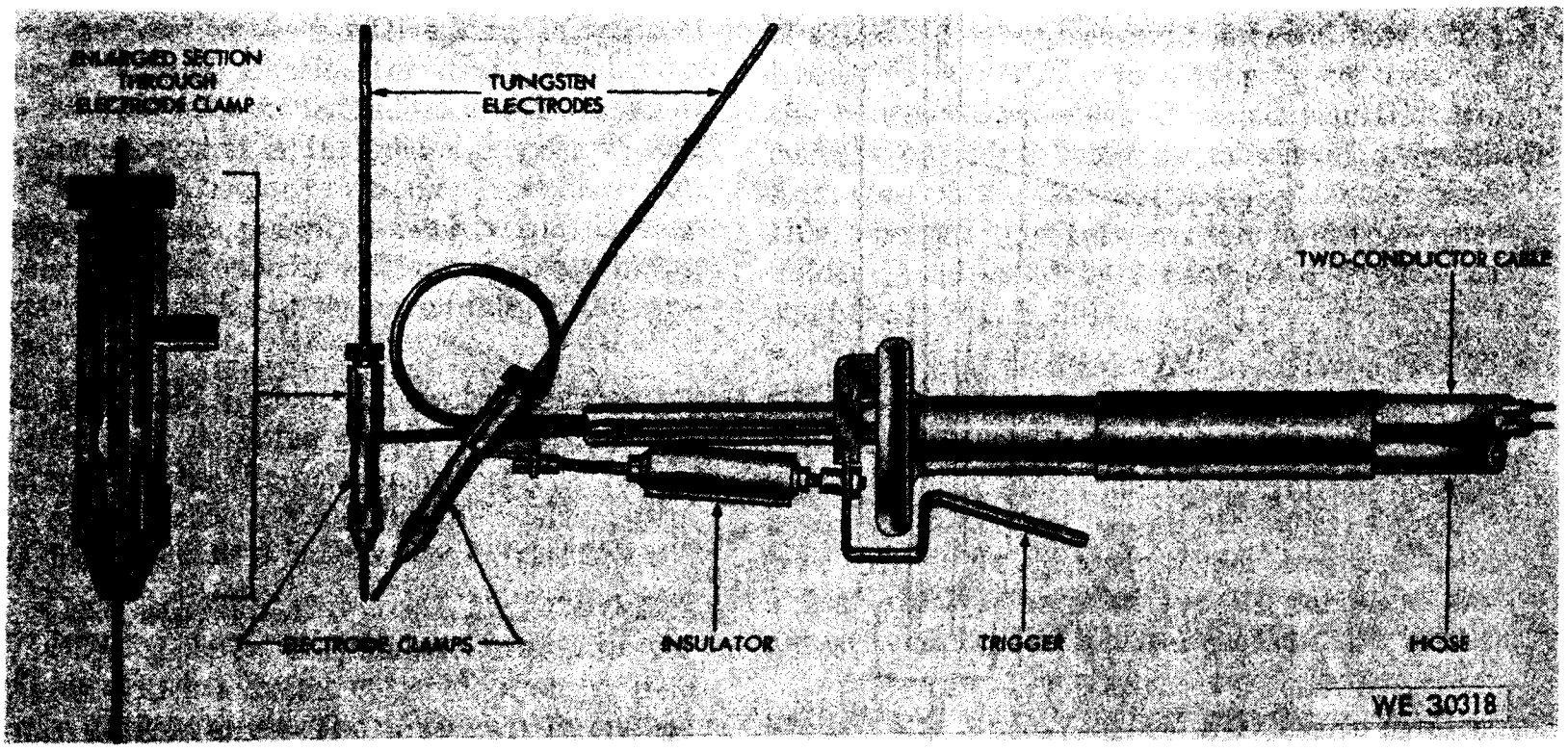

Figure 5–20. Atomic-hydrogen welding torch.

and fire clay or carbon powder can be used for making molds.

d. *Goggles.* Goggles with green lenses and shaped to cover the eye orbit should be available to provide glare protection for personnel, other than those engaged in welding, in and around the vicinity of welding and cutting operations.

Note. **These goggles should not be used in actual welding operations.**

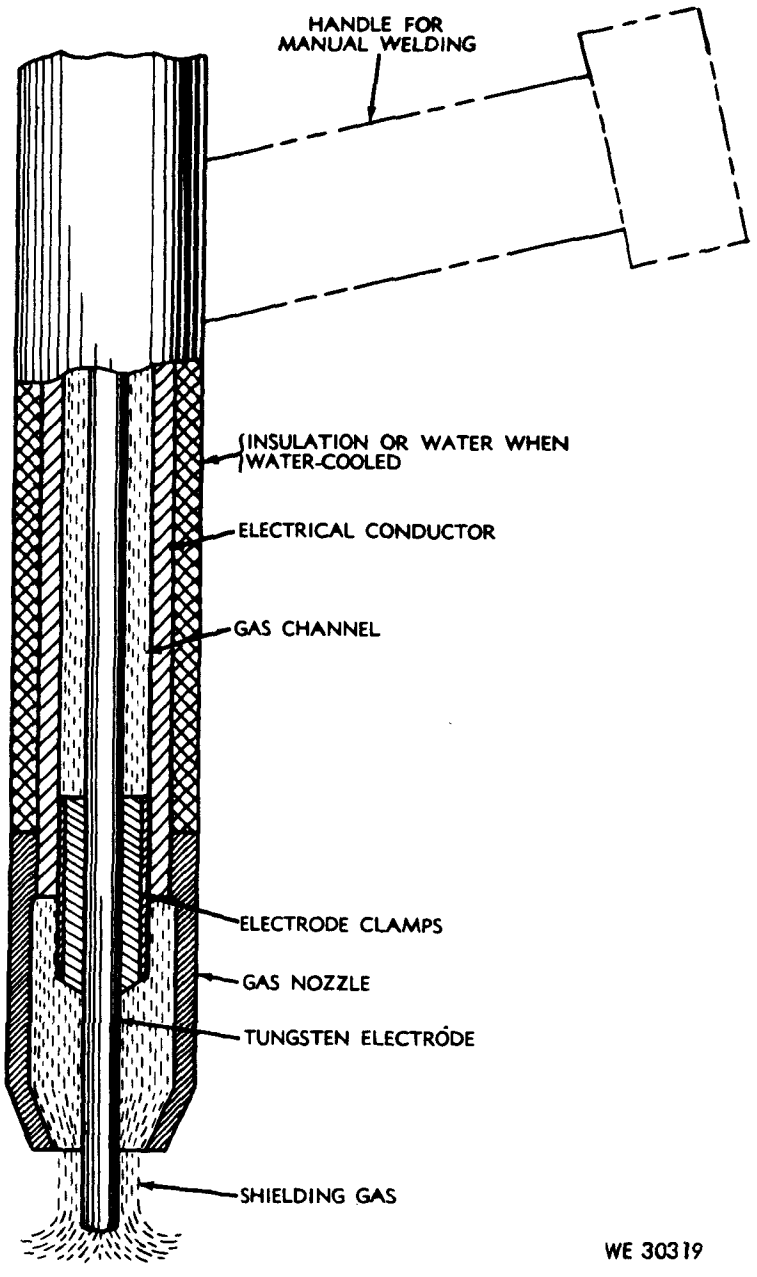

Figure 5–21. Electrode holder for inert-gas tungsten-arc welding.

5–23. Electrodes and Their Use

a. *General.* When molten metal is exposed to air it absorbs oxygen, nitrogen, and becomes brittle or is otherwise injuriously affected. A slag cover is needed to protect molten or solidifying weld metal from the atmosphere. This cover can be obtained from the electrode coating. The coating protects the metal from damage, stabilizes the arc, and improves the weld in other ways as described below.

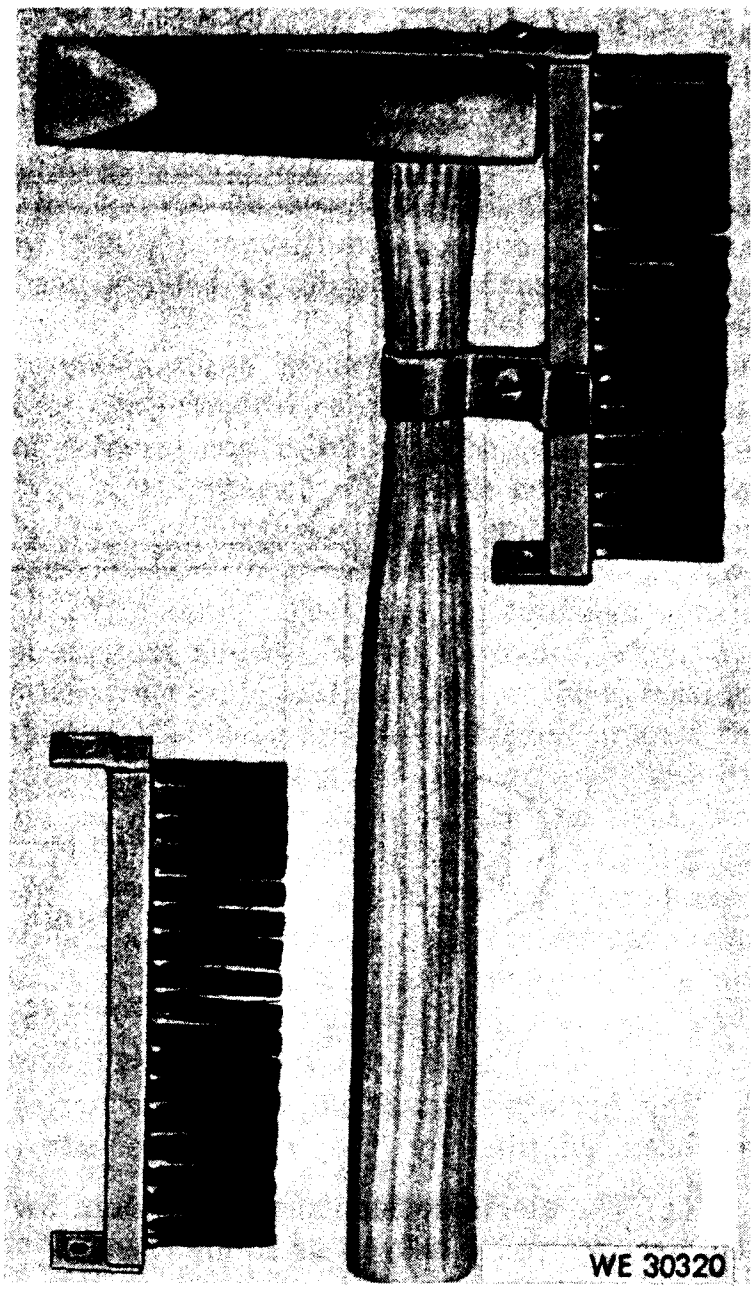

Figure 5–22. Chipping hammer and wire brush.

b. *Types of Electrodes.* The metal arc electrodes may be grouped and classified as bare electrodes, thinly coated electrodes, and shielded arc or heavy coated electrodes. The type used depends on the specific properties required in the weld deposited, such as; corrosion resistance, ductility, high tensile strength, etc.; the type of bare metal to be welded; the position of the weld (i.e., flat, vertical, overhead, or horizontal); the type of current and polarity required.

c. *Classification of Electrodes.* The American

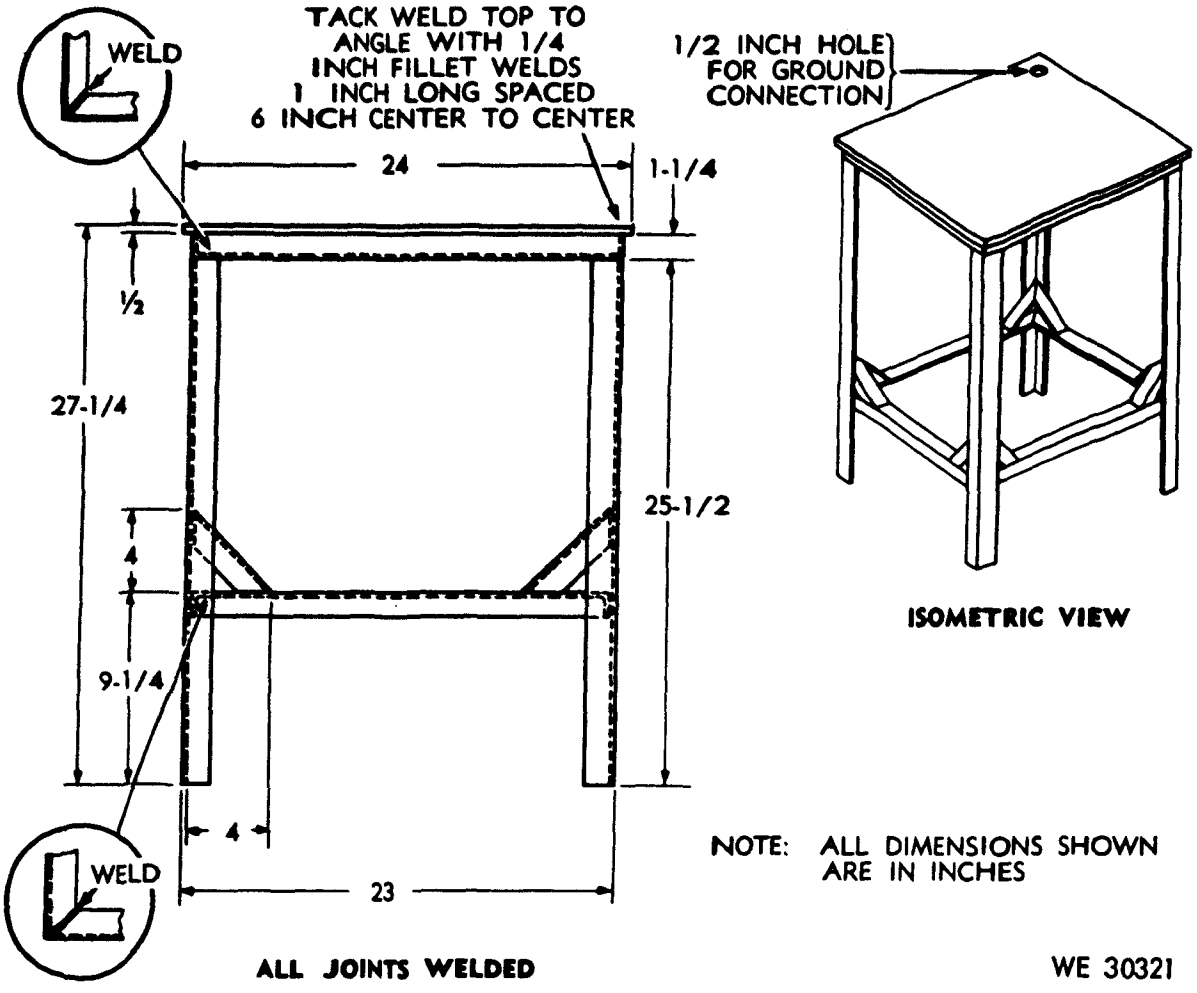

Figure 23. Welding table.

Welding Society's classification number series has been adopted by the welding industry.

(1) The electrode identification system for steel arc-welding is set up as follows:

(a) E indicates electric welding.

(b) The first two (or three) digits indicate the tensile strength in thousands of pounds per square inch, of the deposited metal (stress relieved).

(c) The third (or fourth) digit indicates the position of the weld. 0 indicates the classification is not used; 1 is for all positions; 2 is for flat and horizontal positions; 3 is for flat positions.

(d) The fourth (or last) digit indicates the power supply; either alternating or direct current.

(e) The types of coating, welding current, and polarity position requirements for the fourth (or last) identifying digit of the electrode are as follows:

Digit	*Coating*	*Current*	*Polarity*
0	*	*	*
1	Cellulose potassium	AC/DC	Rev. or Stght.
2	Titania sodium	AC/DC	Stght.
3	Titania potassium	AC/DC	Stght. or Rev.
4	Iron powder titania	AC/DC	Stght. or Rev.
5	Lo-hydrogen sodium	DC	Rev.
6	Lo-hydrogen potassium	AC/DC	Rev.
7	Iron powder iron oxide	AC/DC	
8	Iron powder lo-hydrogen	AC/DC	Rev. or Stght.

* When the fourth (or last) digit is 0, the type of coating and current to be used are determined by the third (or fourth) digit.

(f) The number E6010 indicates an electric welding electrode with a minimum stress relieved tensile strength of 60,000 psi; it can be used in all positions; and reverse polarity direct current is required.

(2) The electrode identification system for stainless-steel arc-welding is set up as follows:

(a) E indicates electric welding.

(b) The first three digits indicate the American Iron and Steel Institute type of stainless steel.

(c) The last two digits indicate the current and position used.

(d) The number E–308–16 by this system indicates stainless steel type 308; with alternating or reverse polarity direct current; and it is used in all positions.

d. *Bare Electrodes.* Bare electrodes are made of wire compositions required for specific application and have no coatings other than those required in wire drawing. These wire drawing coatings have some slight stabilizing effect on the arc but are otherwise of no consequence. Bare electrodes are used in welding manganese steel and other purposes where a coated electrode is not required or is undesirable. A diagrammatic sketch of the transfer of metal across the arc of a bare electrode is shown in fig. 5–24.

e. *Thinly Coated Electrodes.*

(1) Thinly coated electrodes have a definite composition. A thin coating has been applied on the surface by washing, dipping, brushing, spraying, tumbling, or wiping to improve the stability and characteristics of the arc stream. They are listed under the E45 series in the electrode identification system (c above).

(2) The coating generally serves the functions described below:

(a) It dissolves or reduces impurities such as oxides, sulfur, and phosphorus.

(b) It changes the surface tension of the molten metal so that the globules of metal leaving the end of the electrode are smaller and more frequent, making the flow of molten metal more uniform.

(c) It increases the arc stability by introducing materials readily ionized (i.e., changed into small particles with an electric charge) into the arc stream.

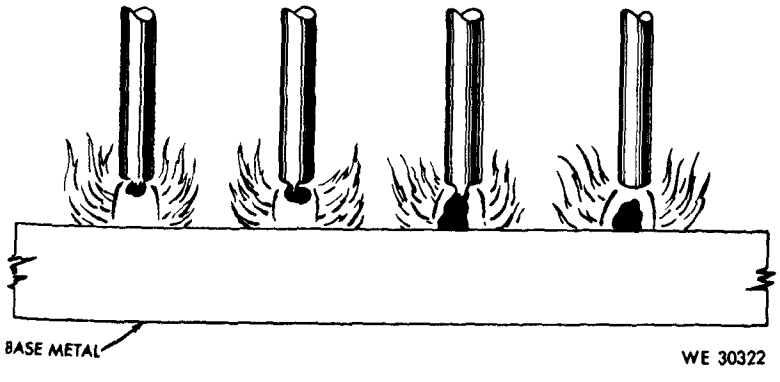

Figure 5–24. Molten metal transfer with a bare electrode.

(3) Some of the thin coatings may produce a slag, but it is quite thin and does not act in the same manner as the shielded-arc slag type electrode. The arc action obtained with light coated electrodes is shown in fig. 5–25.

f. *Shielded-Arc or Heavy-Coated Electrodes.* Shielded-arc or heavy coated electrodes have a definite composition on which a coating has been applied by dipping, extrusion, or other suitable process. The electrodes are manufactured in three general types; with cellulose coatings; mineral coatings; and combinations of mineral and cellulose. The cellulose coated type are composed of soluble cotton or other forms of cellulose with small amounts of potassium, sodium, or titanium, and in some cases added minerals. The mineral coatings consist of sodium silicate, metallic oxides, clay, and other inorganic substances or combinations thereof. Cellulose coated electrodes protect the molten metal with a gaseous zone around the arc as well as slag deposit over the weld. The mineral coated electrode forms a slag deposit only. The shielded arc or heavy coated electrodes are used for welding steels, cast iron, hard surfacing, and other purposes. The arc action obtained with the shielded arc or heavy coated electrode is shown in fig. 5–26.

g. *Functions of Shielded-Arc or Heavy-coated Electrode.*

(1) They produce a reducing gas shield around the arc which prevents atmospheric oxygen or nitrogen weld metal contamination. The oxygen would readily combine with the molten metal removing alloying elements and causing porosity. The nitrogen would cause

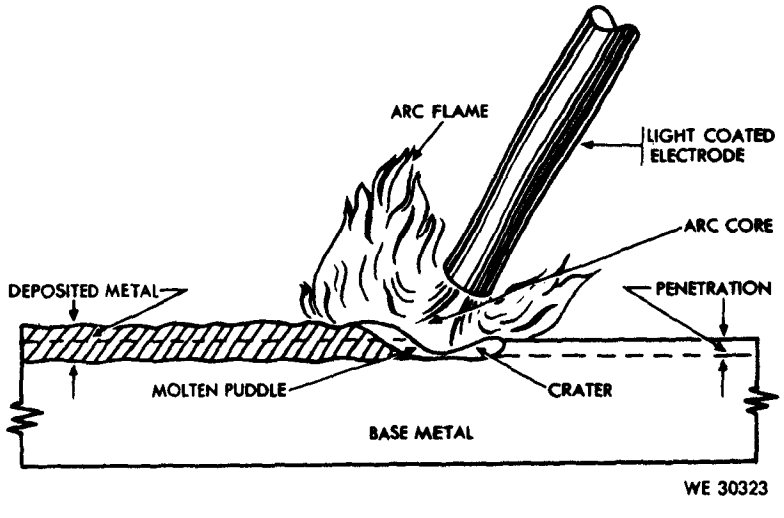

Figure 5–25. Arc action obtained with a thin coated electrode.

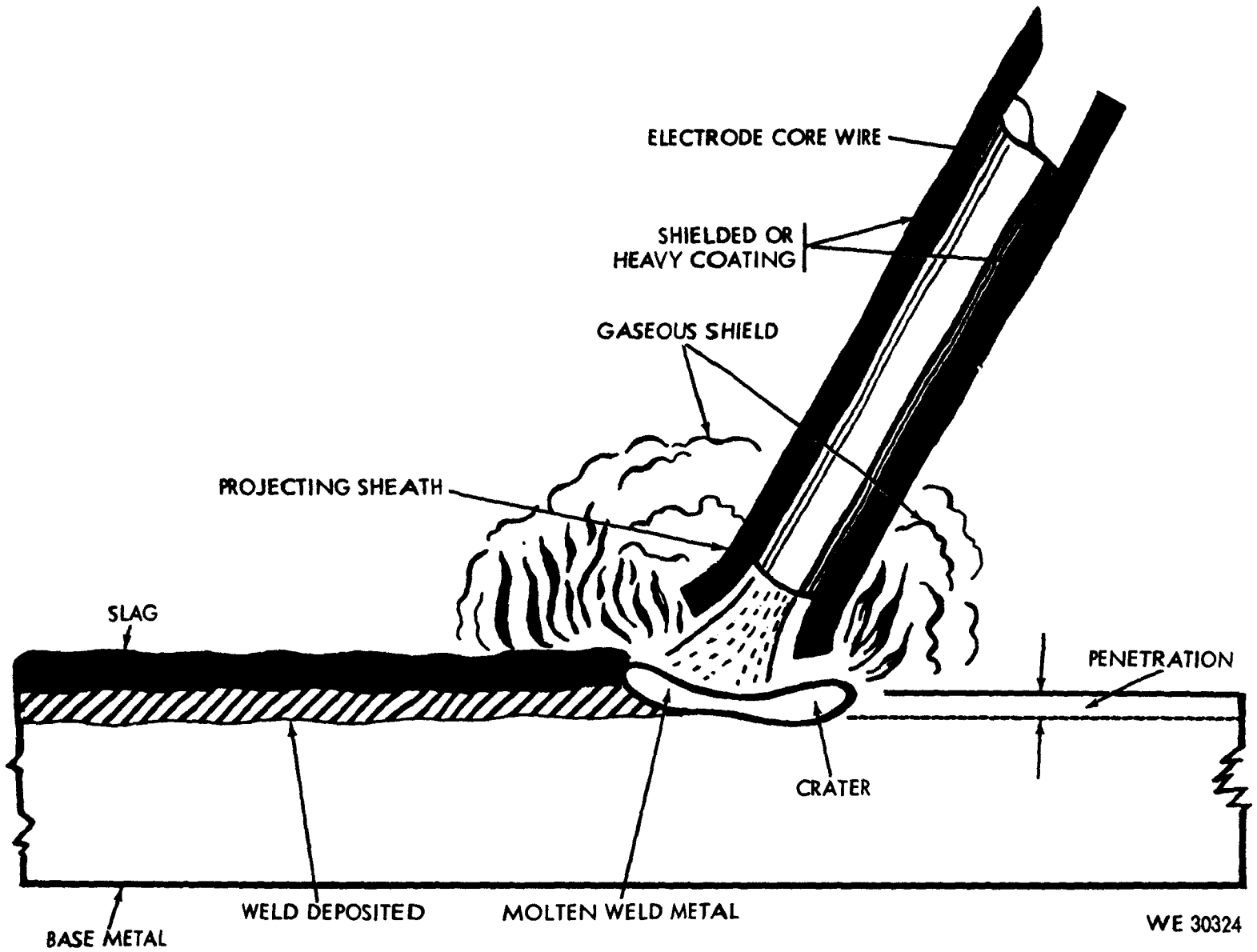

Figure 5-26. Arc action obtained with a heavy-coated electrode.

brittleness, low ductility, and in some cases low strength, and poor resistance to corrosion.

(2) They reduce impurities such as oxides, sulfur, and phosphorus so that these impurities will not impair the weld deposit.

(3) They provide substances to the arc which increases its stability and eliminate wide fluctuations in the voltage so that the arc can be maintained without excessive spattering.

(4) By reducing the attractive force between the molten metal and the end of the electrode, or by reducing the surface tension of the molten metal, the vaporized and melted coating causes the molten metal at the end of the electrode to break up into fine, small particles.

(5) The coatings contain silicates which will form a slag over the melted weld and base metal. Since the slag solidifies at a relatively slow rate it holds the heat and allows the underlying metal to cool and solidify slowly. This slow solidification of the metal eliminates the entrapment of gases within the weld and permits solid impurities to float to the surface. Slow cooling also has an annealing effect on the weld deposit.

(6) The physical characteristics of the weld deposit are modified by incorporating alloying materials in the electrode coating. Also the fluxing action of the slag will produce weld metal of better quality and permit welding at higher speeds.

(7) The coating insulates the sides of the electrode so that the arc is concentrated into a confined area. This facilitates welding in a dee U or V groove.

(8) The coating produces a cup, cone, or

sheath (fig. 5–26) at the tip of the electrode which acts as a shield, concentrates and directs the arc, reduces heat losses and increases the temperature at the end of the electrode.

h. *Polarity of Welding Current.*

(1) The polarity recommended for use with a specific type of electrode is established by the manufacturer and may be either "straight" or "reverse". In straight polarity the electrode is in the negative side of the circuit, and with the reverse polarity the electrode is on the positive side. Straight and reverse polarity circuits are shown in figure 5–27.

(2) In general straight polarity is used with all mild steel, bare, or thinly coated electrodes. With electrodes of this type the greater heat is developed at the positive side of the current, which is at the work being welded. However, when heavy coated electrodes are used the gases given off in the arc may alter the heat conditions and greater heat is produced on the negative side. The composition of the electrode coatings affect the heat conditions differently. One type of heavy coating may provide the most desirable heat balance with straight polarity, while another type of coating on the same electrode may provide a more desirable heat balance with reverse polarity.

(3) Reverse polarity is used in the welding of nonferrous metals such as aluminum, bronze, monel, and nickel. Reverse polarity is also used with some types of electrodes for making vertical and overhead welds.

(4) The proper polarity for a given electrode can be recognized by the sharp, cracking

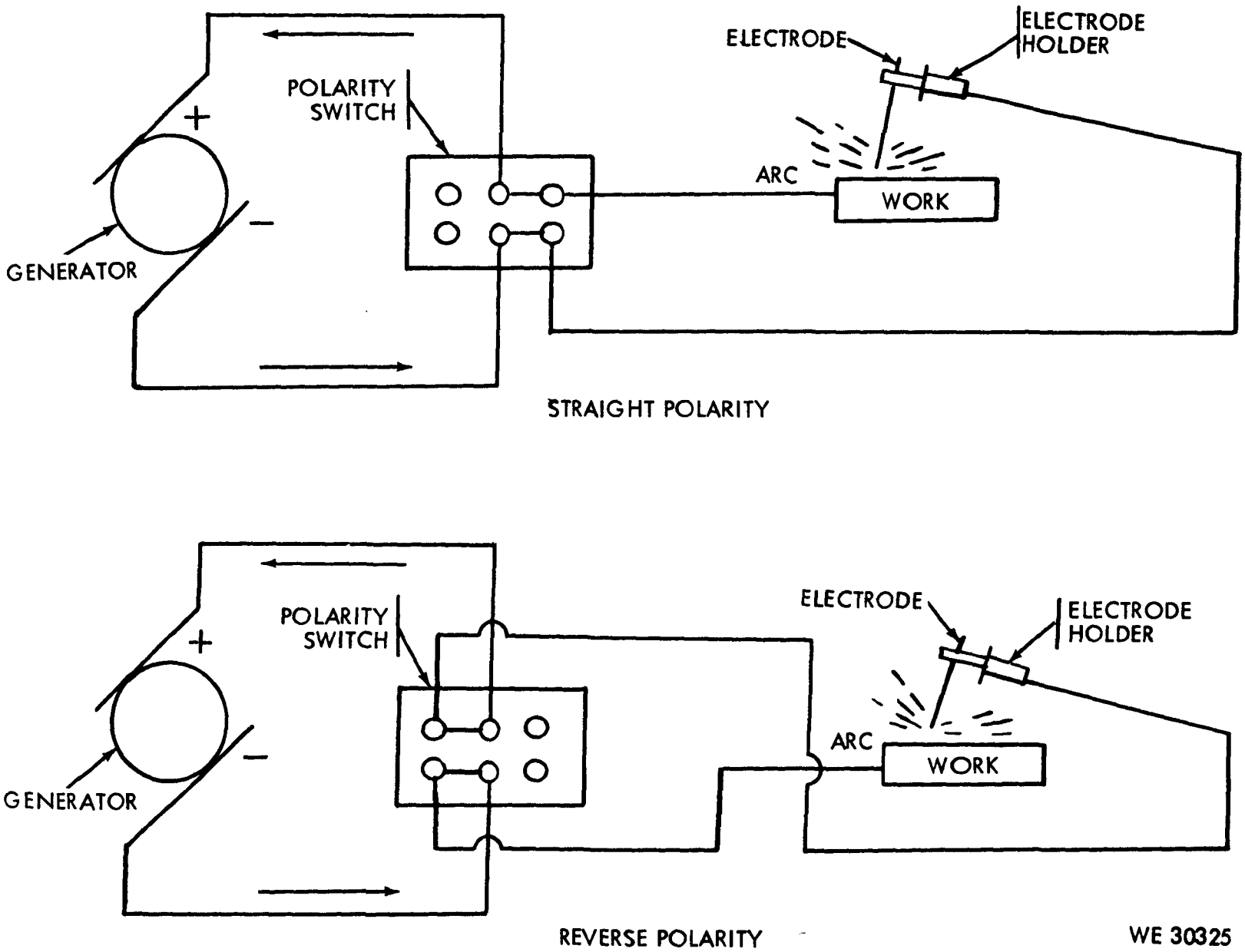

Figure 5–27. Straight and reverse polarity in electric welding.

sound of the arc. The wrong polarity will cause the arc to emit a hissing sound, and the welding bead will be difficult to control.

i. *Direct Current Arc-Welding Electrodes.*

(1) The manufacturer's recommendations should be followed when a specific type of electrode is being used. In general, direct current shielded arc electrodes are designed either for reverse polarity (electrode positive) or for straight polarity (electrode negative) and are interchangeable. Many, but not all of the direct current electrodes can be used with alternating current. Direct current is preferred for many types of covered nonferrous, bare and alloy steel electrodes. Recommendations from the manufacturer also include the type of base metal for which given electrodes are suitable, for poor fit ups, and other specific conditions.

(2) In most cases straight polarity electrodes will provide less penetration than the reverse polarity electrodes, and for this reason will permit greater welding speed. Good penetration can be obtained from either type with proper welding conditions and arc manipulation.

j. *Alternating Current Arc-Welding Electrodes.*

(1) Coated electrodes which can be used with either direct or alternating current are available. Alternating current is more desirable while welding in restricted areas or when using the high currents required for thick sections because it reduces arc blow. Arc blow causes blowholes, slag inclusions, and lack of fusion in the weld.

(2) Alternating current is used in atomic hydrogen welding and in those carbon arc processes that require the use of two carbon electrodes. It permits a uniform rate of welding and electrode consumption. In carbon arc processes where one carbon electrode is used direct current straight polarity is recommended, because the electrode will be consumed at a lower rate.

k. *Electrode Defects and Their Effect.*

(1) If certain elements or their oxides are present in electrode coatings the arc stability will be affected. In bare electrodes the composition and uniformity of the wire is an important factor in the control of arc stability. Thin or heavy coatings on the electrodes will not completely remove the effects of defective wire.

(2) Aluminum or aluminum oxide, even when present in quantities not exceeding 0.01 percent, silicon, silicon dioxide, and iron sulphate cause the arc to be unstable. Iron oxide, manganese oxide, calcium oxide, and iron sulphide tend to stabilize the arc.

(3) When phosphorus or sulfur are present in excess of 0.04 percent they will impair the weld metal because they are transferred from the electrode to the molten metal with very little loss. Phosphorus causes grain growth, brittleness, and "cold shortness" (i.e., brittle when below red heat) in the weld, and these defects increase in magnitude as the carbon content of the steel increases. Sulfur acts as a slag, breaks up the soundness of the weld metal, and causes "hot shortness" (i.e., brittle when above red heat). Sulfur is particularly harmful to bare low carbon steel electrodes with a low manganese content. Manganese promotes the formation of sound welds.

(4) If the heat treatment given the wire core of an electrode is not uniform the electrode will produce welds inferior to those produced with an electrode of the same composition that has been properly heat treated.

Section IV. RESISTANCE WELDING EQUIPMENT

5–24. Resistance Welding

a. *General.* A standard type of equipment used for resistance welding is composed of these principal elements.

(1) An electrical circuit with a transformer and current regulator. A secondary circuit to conduct the welding current to the electrodes.

(2) The mechanical equipment for holding the work and applying the required pressure.

(3) The control and timing devices.

b. *Spot Welding.*

(1) A spot welding machine with its essential operating elements for manual operation is shown in figure 5–28. In this machine

the electrode jaws are extended in such a manner as to permit a weld to be made at a considerable distance from the edge of the base metal sheet. The electrodes, which are composed of a copper alloy, are assembled in a manner by which considerable force or squeeze may be applied to the metal during the welding process.

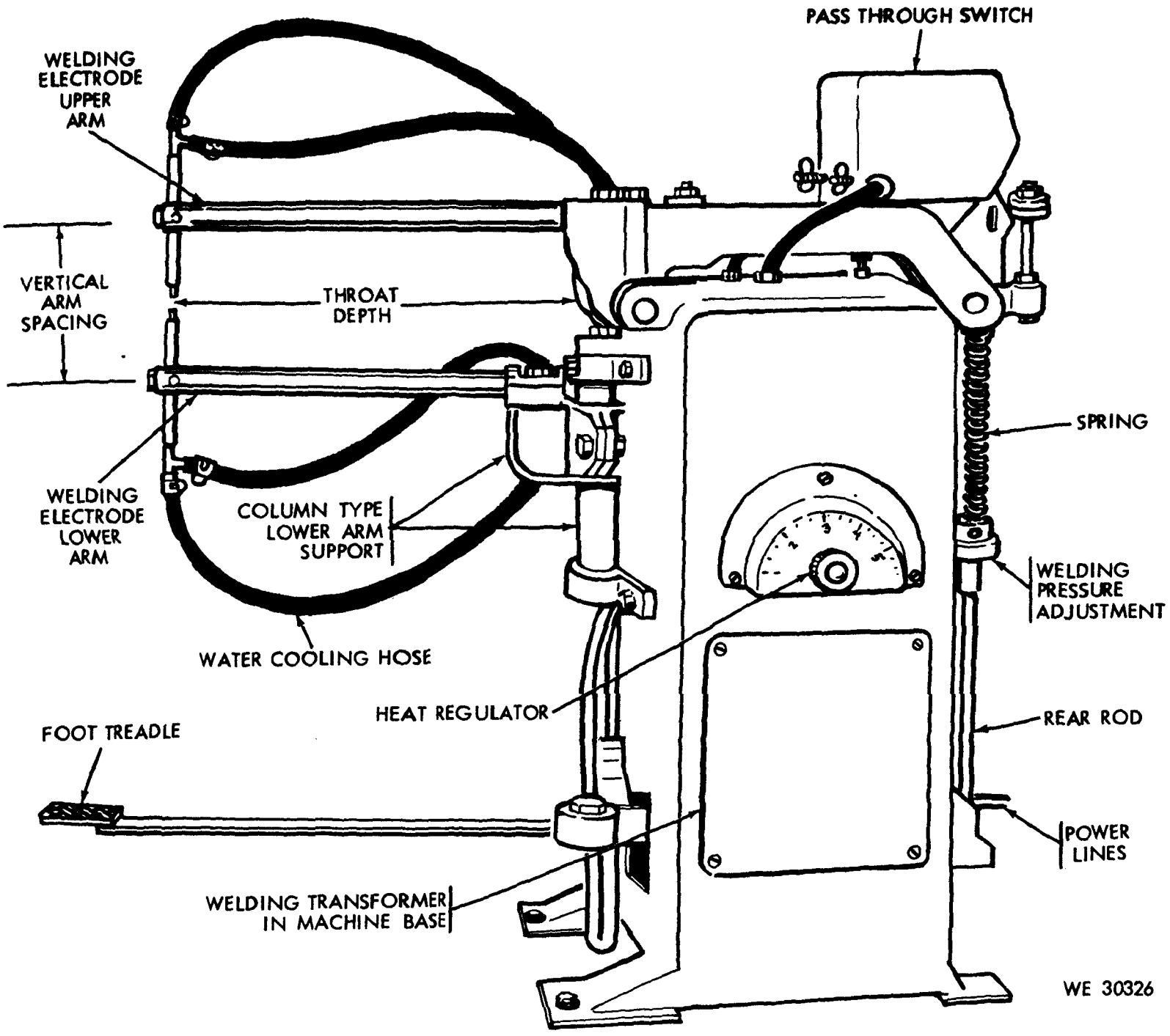

Figure 5–28. Spot welding machine and accessories.

(2) In aluminum spot welding conventional machines may be used, however, the best results are obtained only if certain refinements are incorporated into these machines. Some of these desirable features are: ability to handle high current for short weld times; precise electronic control of current and length of time it is applied; rapid follow up of the electrode force by employing anti-friction bearings and lightweight low inertia heads; high structural rigidity of the welding machine arms, holders, and platens in order to minimize deflection under the high electrode forces used for aluminum, and to reduce magnetic deflections; a variable or dual force cycle to permit forging the weld nugget; slope control to permit a gradual buildup and tapering off of the welding current; postheat current to allow slower cooling of the weld nugget; good cooling of the Class I electrodes to prevent tip pickup

or sticking. Refrigerated cooling is often helpful.

c. *Projection Welding.* The projection welding dies or electrodes have flat surfaces with larger contacting areas than spot welding electrodes. The effectiveness of this project depends on the uniformity of the projection or embossments on the base metal with which the electrodes are in contact (fig. 5-29).

d. *Upset and Flash Welding.* Both of these processes can be performed on the same type of machine. The metals that are to be joined serve as electrodes.

e. *Seam Welding.* Several type of machines are used for seam welding, the type used depends on the service requirements. In some machines the work is held in a fixed position and a wheel type electrode is passed over it. Portable type seam welding machines use this principle. In the traveling fixture type seam welding machine the electrode is stationary and the work is moved.

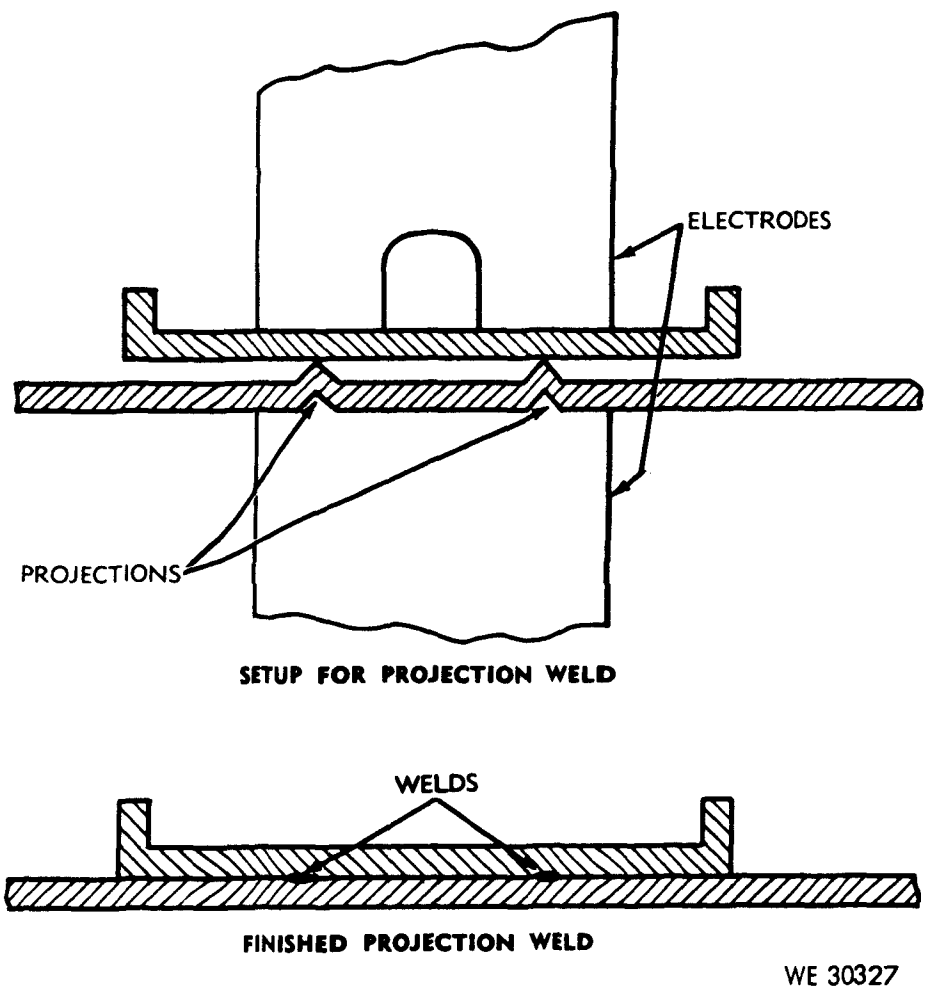

Figure 5-29. Projection welding.

Section V. THERMIT WELDING EQUIPMENT

5-25. Thermit Welding

Molten steel is produced by the thermit reaction in a magnesite-lined crucible, at the bottom of which is a burned magnesite stone into which a magnesite stone thimble is fitted. This thimble provides a passage through which the molten steel is discharged into the mold. The hole through the thimble is plugged with a tapping pin, which is covered with an asbestos washer and refractory sand. The crucible is charged by placing in it the correct quantity of thoroughly mixed thermit material. In preparing the joint for thermit welding the parts to be welded are cleaned, alined, and held firmly in place. If necessary metal is removed from the joint to permit a free flow of the ther-

mit metal into the joint. A wax pattern is then made around the joint in the size and shape of the intended weld. A mold made of refractory sand is built around the wax pattern and joint to hold the molten metal after it is poured. The sand mold is then heated to melt out the wax and dry the mold. The mold should be properly vented to permit the escape of gases and to allow the proper distribution of the thermit metal at the joint. A thermit welding crucible and mold is shown in figure 5–30.

Section VI. FORGE WELDING TOOLS AND EQUIPMENT

5–26. Forges

The forge, which may be either portable or stationary, is most important component of forge welding equipment. The two types used in hand forge welding are described below:

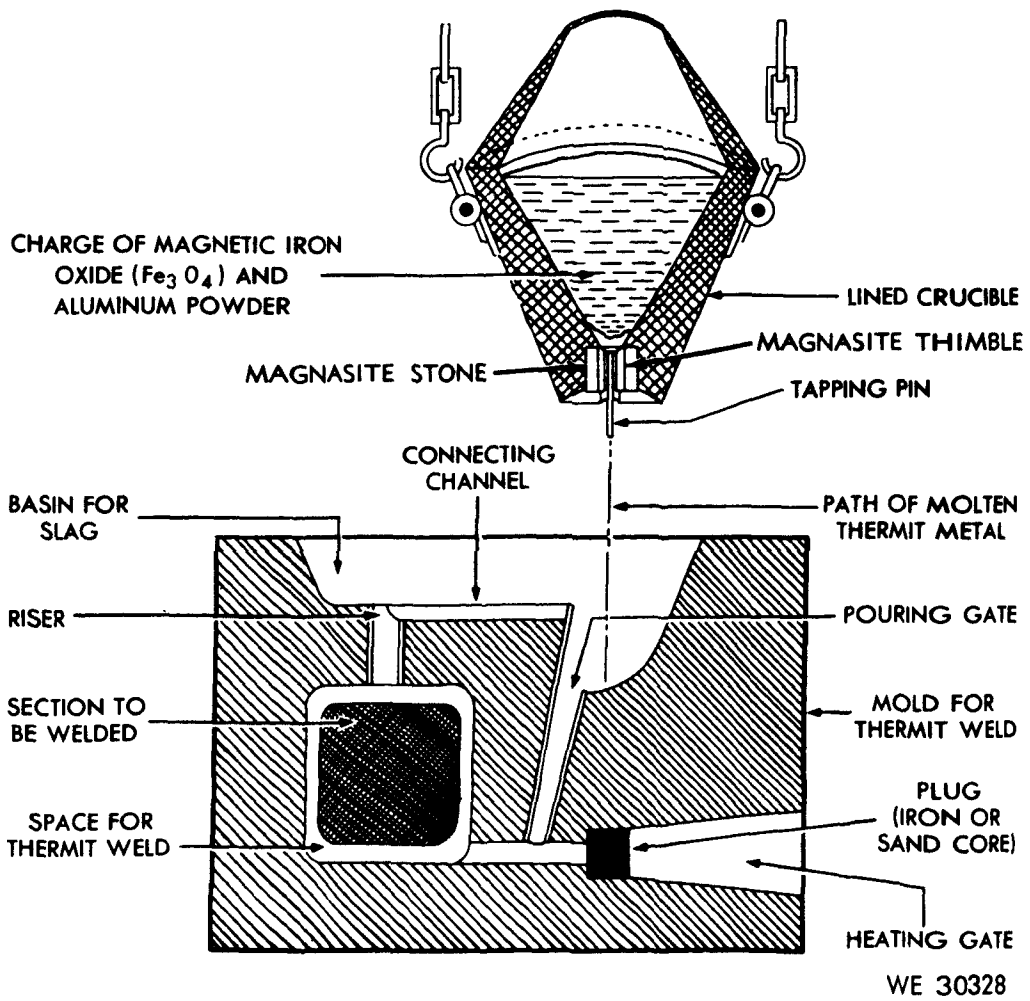

Figure 5–30. Thermit welding crucible and mold.

a. *Portable Forge.* The essential parts of a forge are a hearth, a tuyere, a water tank, and a blower. One type of portable forge is shown in figure 5–31. The tuyere is a valve mechanism designed to direct an air blast into the fire. It is made of cast iron and consists of a fire pot, base with air inlet, blast valve, and ash gate. The air blast passes through the base and is admitted to the fire through the valve. The valve can be set in three different positions to regulate the size and direction of the blast according to the fire required. The valve handle is also used to free the valve from ashes. A portable forge may have a handcrank blower, as shown in figure 5–31, or it may be equipped with an electric blower. The blower produces air blast pressure of about 2 ounces per square inch. A hood is provided on the forge for carrying away smoke and fumes.

b. *Stationary Forge.* The stationary forge is

Figure 5–31. Portable forge.

much the same as the portable forge except that it is usually larger, with larger air and exhaust connections. The forge may have an individual blower or there may be a large capacity blower for a group of forges. The air-blast valve usually has three slots at the top, the positions of which can be controlled by turning the valve. The opening of these slots can be varied to regulate the volume of the blast and the size of the fire. The stationary forges, like portable forges, are available in both updraft and downdraft types. In the updraft type the smoke and gases pass up through the hood and chimney by natural draft or are drawn off by an exhaust fan. In the downdraft type the smoke and fumes are drawn down under an adjustable hood and carried through a duct by an exhaust fan that is entirely separate from the blower. The downdraft forge permits better air circulation and shop ventilation, because the removal of fumes and smoke is positive.

5–27. Forging Tools

a. *Anvil.* The anvil (fig. 5–32) is usually made of two forgings or steel castings welded together at the waist. The table or cutting block is soft so that the cutters and chisels coming in contact with it, after cutting through a piece of stock, will not be dulled. The face is made of hardened and tempered tool steel which is welded to the top of the anvil. It cannot be easily damaged by hammering.

(1) The edges of an anvil are rounded for about 4 inches back from the table to provide edges where stock can be bent without danger of cutting it. All other edges are sharp and will cut stock when it is hammered against them. The hardy hole is square and is designed to hold the hardy, bottom, swages, fullers, and other special tools. The pritchel hole is round and permits slugs of metal to pass through when holes are punched in the stock. The anvil is usually mounted on a heavy block of wood,

although steel pedestals or bolsters are sometimes used. The height of the anvil should be adjusted so that the operator's knuckles will just touch its face when he stands erect with his arms hanging naturally.

(2) Anvils are designated by weight (i.e., no. 150 weights 150 pounds), and range in sizes from no. 100 to no. 300.

b. *Other Tools.* In addition to the anvil other tools such as hammers, sledges, tongs, fullers, flatters, chisels, swage blocks, punches, and a vise are used in forging operations.

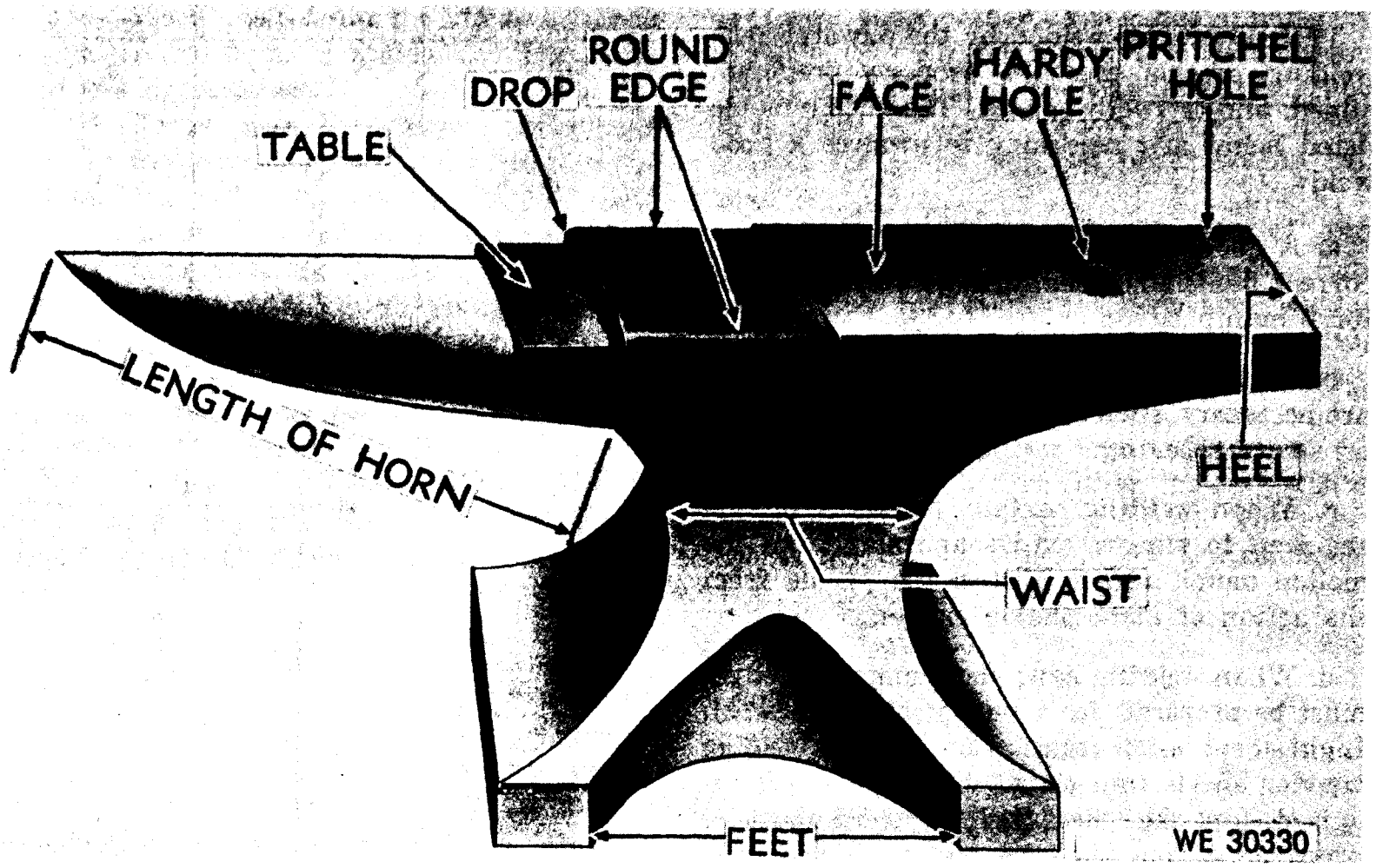

5–32. Blacksmith's anvil.

CHAPTER 6

OXY-ACETYLENE WELDING AND CUTTING

Section I. WELDING PROCESS AND TECHNIQUES

6–1. General Welding Procedure

The edges to be welded by the oxy-acetylene welding process must be properly prepared, alined, and correctly spaced. The requirements listed below are necessary to produce a good weld:

a. A good weld requires a proper torch tip, correct flame adjustment, and skillful rod and torch manipulation.

b. Under some conditions special procedures are necessary, such as preheating, slow cooling, or stress relieving.

c. When welding certain metals a flux is required to remove oxides and slag from the molten metal, and to protect the puddle from the action of atmospheric oxygen.

d. When welding light sheet metal the edges must be prepared for a butt joint (par. 3–12). Light sheet metal requires no filler. In welding heavier sheets and plates filler metals are required, and the edges being welded must be prepared so that the filler metal will penetrate to the joint root.

6–2. Working Pressures for Welding Operations

The required working pressure increases as the tip orifice increases. The relation between the tip number and the diameter of the orifice may vary with different manufacturers. However, the smaller number always indicates the smaller diameter. For the approximate relation between the tip number and the required oxygen and acetylene pressures, see tables 10 and 11.

Table 10. Low Pressure or Injector Type Torch

Tip size, no.	Acetylene, psi	Oxygen, psi
0	1	9
1	1	9
2	1	10
3	1	10
4	1	11
5	1	12
6	1	14
7	1	16
8	1	19
10	1	21
12	1	25
15	1	30

Table 11. Balanced Pressure Type Torch

Tip size, no.	Acetylene, psi
1	2
1	2
3	3
4	3
5	3.5
6	3.5
7	5
8	7
9	9
10	12

Note. **Oxygen pressures are approximately the same as acetylene in the balanced pressure type torch. Pressures for specific types of mixing heads and tips are specified by the manufacturer.**

6–3. Flame Adjustment and Flame Types

a. *Lighting the Torch.* To start the welding torch hold it so as to direct the flame away from the operator, gas cylinders, hose, or any flammable material. Open the acetylene valve and ignite the gas by striking the sparklighter in front of the tip.

(1) Since the oxygen valve is closed the acetylene is burned by the oxygen in the air.

There is not sufficient oxygen to provide complete combustion so the flame is smoky and produces a soot of fine unburned carbon. The acetylene flame is long, bushy, and has a yellowish color. This pure acetylene flame is unsuitable for welding.

(2) Before opening the oxygen valve, the acetylene valve should be slowly opened until the base of the pure acetylene flame is about 1/16 to ⅛-inch away from the tip face. When so adjusted the flame is stable and free from flashbacks or backfires.

(3) Slowly open the oxygen valve; the acetylene flame will shorten and return to the tip face. The flame changes to a bluish-white and forms a bright inner cone surrounded by an outer flame envelope or sheath flame. The inner cone develops the high temperature required for welding. The outer envelope contains varying amounts of incandescent carbon soot, depending on the proportions of oxygen and acetylene in the flame.

(4) The temperature produced is so high (up to 6,300 deg F.) that the products of complete combustion (i.e., carbon dioxide and water) are decomposed into their elements. Acetylene burning in the inner cone with oxygen supplied by the torch forms carbon monoxide and hydrogen. As these gases cool from the high temperatures of the inner cone they burn completely with the oxygen supplied by the surrounding air and form the lower temperature sheath flame. The carbon monoxide burns to form carbon dioxide and the hydrogen burns to form water vapor. Since the inner cone contains only carbon monoxide and hydrogen, which are reducing in character (i.e., able to combine with and remove oxygen), oxidation of the metal will not occur within this zone.

b. *Types of Flames.* Three types of oxy-acetylene flames, shown in figure 6–1, are commonly used for welding. These are neutral, reducing (or carburizing), and oxidizing flames.

(1) *NEUTRAL FLAME.*

(a) The welding flame should be adjusted to neutral before either the carburizing or oxidizing flame mixture is set. There are two clearly defined zones in the neutral flame.

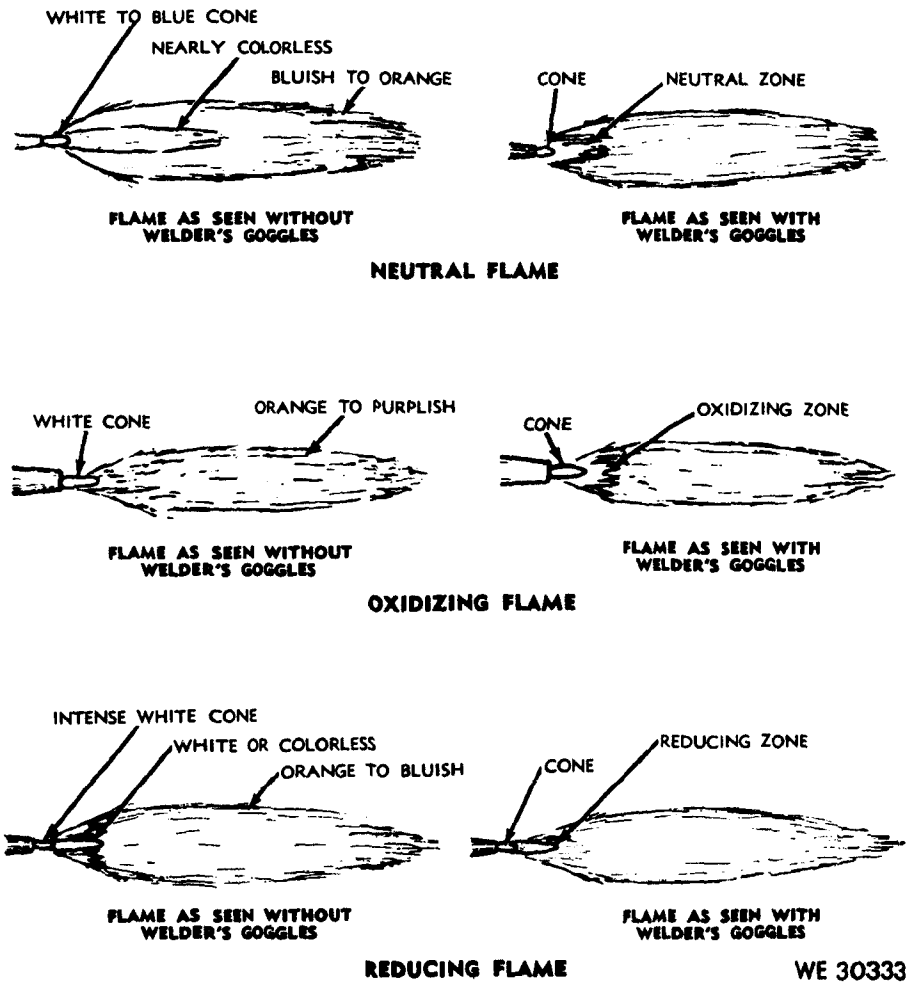

Figure 6–1. Oxy-acetylene flames.

The inner zone consists of a luminous cone that is bluish-white. Surrounding this is a light blue flame envelope or sheath. This neutral flame is obtained by starting with an excess acetylene flame in which there is a "feather" extension of the inner cone. When the flow of acetylene is decreased or the flow of oxygen increased the feather will tend to disappear. The neutral flame begins when the feather disappears.

(b) The neutral or balanced flame is obtained when the torch mixed gases consist of approximately one volume of oxygen and one volume of acetylene. It is obtained by gradually opening the oxygen valve to shorten the acetylene flame until a clearly defined inner cone is visible. For a strictly neutral flame no whitish streamers should be present at the end of the cone. In some cases it is desirable to leave a slight acetylene streamer or "feather" (1/16 to ⅛-inch long) at the end of the cone to insure that the flame is not oxidizing. The volume ratio of oxygen to acetylene in forming a neutral flame is 1.04 to 1.14. This flame adjustment is used for most welding operations and for preheating during cutting operations. When welding steel with this flame the molten metal puddle is quiet and clear. The metal flows easily without boiling, foaming, or sparking.

(c) In the neutral flame the temperature at the inner cone tip is approximately 5,850 deg F., while at the end of the outer sheath or envelope the temperature drops to approximately 2,300 deg F. This variation within the flame permits some temperature control when making a weld. The position of the flame to the molten puddle can be changed, and the heat controlled in this manner.

(2) *REDUCING OR CARBURIZING FLAME.*

(a) The reducing or carburizing flame is obtained when slightly less than one volume of oxygen is mixed with one volume of acetylene. The volume ratio is 0.85 to 0.95. This flame is obtained by first adjusting to neutral and then slowly opening the acetylene valve until an acetylene streamer or "feather" is at the end of the inner cone. The length of this excess streamer indicates the degree of flame carburization. For most welding operations this streamer should be approximately twice the length of the inner cone.

(b) The reducing or carburizing flame can always be recognized by the presence of three distinct flame zones. There is a clearly defined bluish-white inner cone, a white intermediate cone indicating the amount of excess acetylene, and a light-blue outer flame envelope. This type of flame burns with a coarse rushing sound and has a temperature of approximately 5,700 deg F., at the inner cone tips.

(c) When a strongly carburizing flame is used for welding the metal boils and is not clear. The steel in absorbing carbon from the flame gives off heat which causes the metal to boil. When cold the weld has the properties of high carbon steel, being brittle and subject to cracking.

(d) A slight feather flame of acetylene is sometimes used for backhand welding (par. 6–5). A carburizing flame is advantageous for welding high carbon steel, for hard facing operations, and for welding such nonferrous alloys as nickel and monel. When used in silver soldering operations only the intermediate and outer flame cones are used. They impart a low temperature soaking heat to the parts being soldered.

(3) *Oxidizing Flame.*

(a) The oxidizing flame is produced when slightly more than one volume of oxygen is mixed with one volume of acetylene. The volume ratio is 1.7 to 1.15. To obtain this type of flame the torch should first be adjusted to give a neutral flame. The flow of oxygen is then increased until the inner cone is shortened to about one-tenth of its original length. When the flame is properly adjusted the inner cone is pointed and slightly purple. An oxidizing flame can also be recognized by its distinct hissing sound. The temperature of this flame is approximately 6,300 deg F.

(b) When applied to steel an oxidizing flame causes the molten metal to foam and give off sparks. This indicates that the excess oxygen is combining with the steel and burning it. An oxidizing flame should not be used for welding steel because the deposited metal will be porous, oxidized, and brittle. This flame will ruin most metals and should be avoided, except as noted in (c) below.

(c) A slightly oxidizing flame is used in torch brazing of steel and cast iron. A

stronger oxidizing flame is used in the welding of brass or bronze.

(d) In most cases the amount of excess oxygen used in this flame must be determined by observing the action of the flame on the molten metal.

6–4. Forehand Welding

a. In this method the welding rod precedes the torch. The torch is held at an angle of approximately 60 deg, as shown in figure 6–2, to the plates being welded. The flame is pointed in the direction of the weld and placed between the rod and the molten puddle. This position permits uniform preheating of the plate edges immediately ahead of the molten puddle. By moving the torch and the rod in opposite semicircular paths the heat can be carefully balanced to melt the end of the rod and the side walls of the plate into a uniformly distributed molten puddle. The moving flame melts off a short length of the rod and adds it to the molten puddle. The heat which is reflected backwards from the rod keeps the metal molten. The metal is distributed evenly to both edges being welded and to the deposited head by the motion of the tip and rod.

b. This method is satisfactory for welding sheets and light plates in all positions. Some difficulties are encountered in welding heavier plates for the reasons given below:

(1) In forehand welding the edges of the plate must be beveled to provide a wide V with a 90 deg included angle. This edge preparation is necessary to insure satisfactory melting of the plate edges, good penetration, and fusion of the weld metal to the base metal.

(2) Because of this wide V a relatively large molten puddle is required. It is difficult to obtain a good joint when the puddle is too large.

6–5. Backhand Welding

a. In this method the torch precedes the welding rod, as shown in figure 6–3. The torch is held at an angle of approximately 60 deg to the plates being welded with the flame directed at the molten puddle. The welding rod is between the flame and the molten puddle. This position requires less transverse motion than is used in forehand welding.

b. Backhand welding is used principally for welding heavy sections because it permits the use of narrower V's at the joint. A 60 deg included angle of bevel is sufficient for a good weld. In general there is less puddling, and less weld rod is used with this method than with the forehand method.

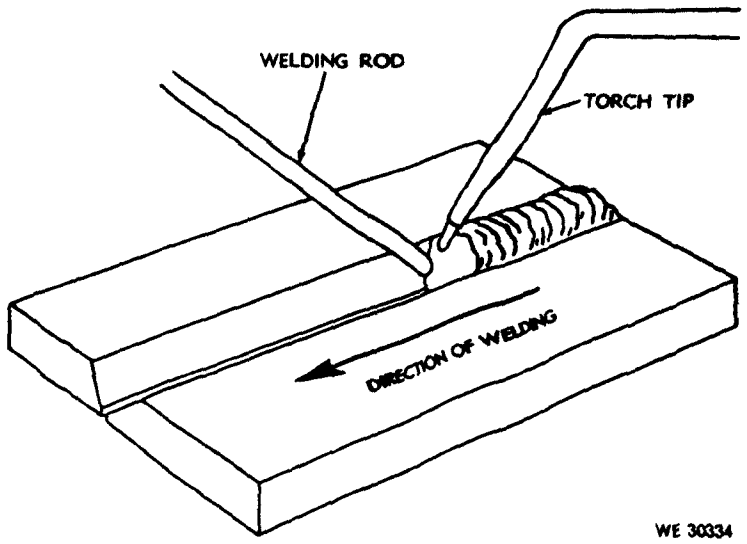

Figure 6–2. Forehand welding.

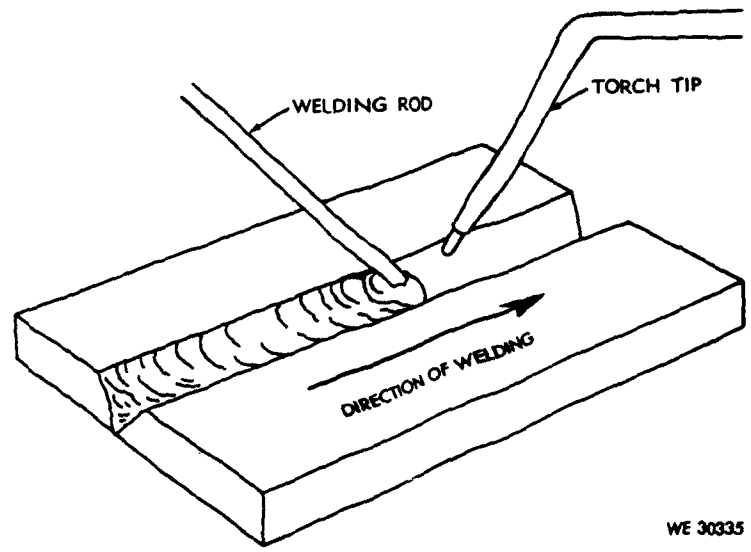

Figure 6–3. Backhand welding.

6–6. Multilayer Welding

a. In single layer welding of thich metal the side walls of the V could be melted excessively, which results in a wide weld. Multilayer welding (fig. 6–4) consists of depositing metal in two or more layers or passes. It is used in welding thick plates or pipe walls to avoid carrying a large puddle of molten metal, which is difficult to control.

b. The multilayer method allows the welder to concentrate on getting good penetration at the root of the V in the first pass or layer. The final layer is easily controlled to obtain a good smooth surface.

c. This method permits the metal deposited in a given layer to be partly or wholly refined by the succeeding layers, and therefore improved in ductility. The lower layer of weld metal, after cooling to black heat, is reheated by the upper layer through the critical temperature range and then cooled, in effect it is heat treated. In work where this added quality is desired in the top layer of the welded joint, an excess of weld metal is deposited on the finished weld and then machined off. The purpose of this last layer is simply to provide welding heat to refine the final layer of weld metal.

6–7. Flat Position Welding

a. *Bead Welds.* In order to make satisfactory bead welds on a plate surface the flame motion, tip angle, and position of the welding flame above the molten puddle should be carefully maintained. The welding torch should be adjusted to give the proper type of flame for the particular metal being welded.

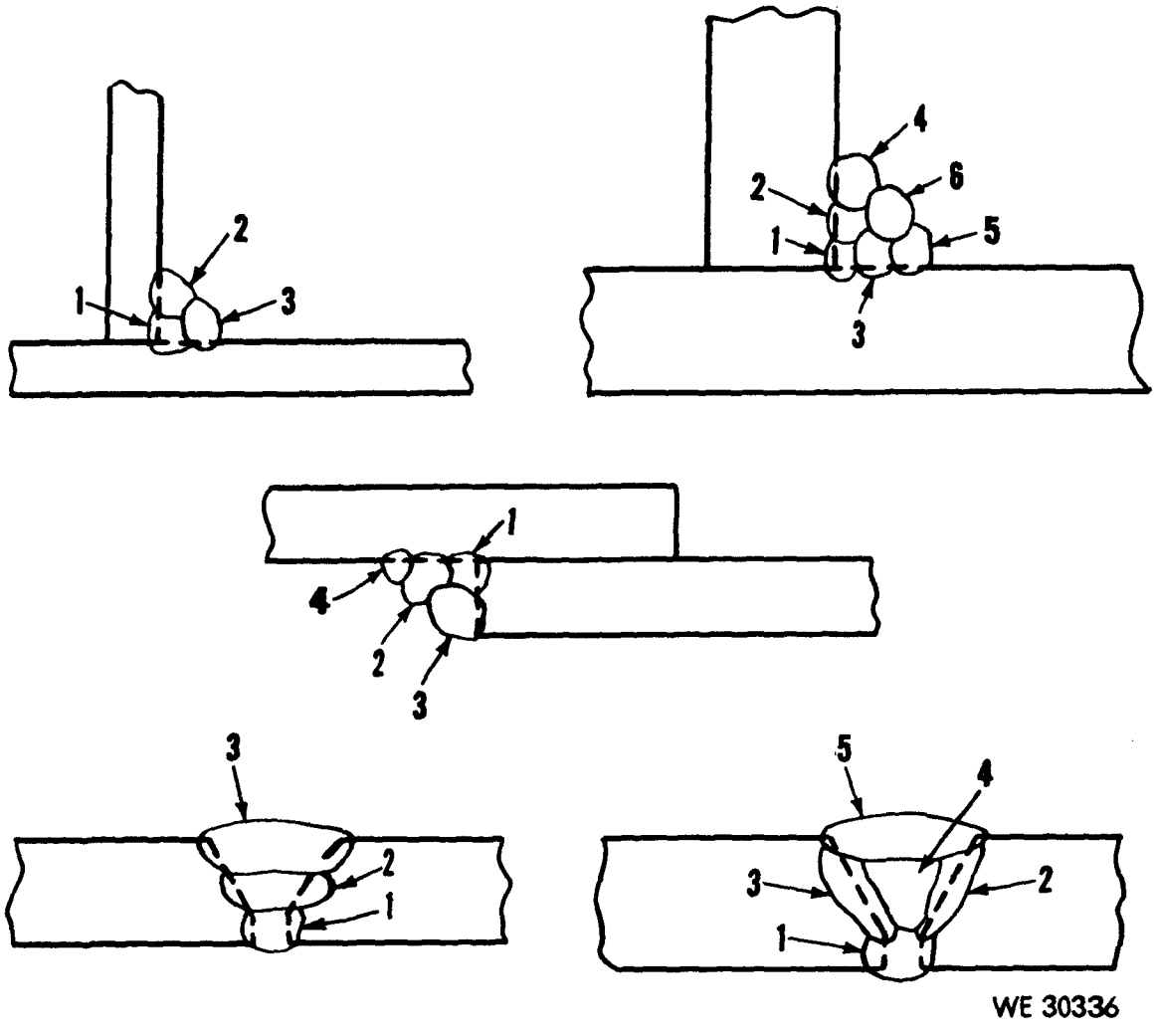

Figure 6–4. Sequences in multilayer welding.

(1) Narrow bead welds are made by raising and lowering the welding flame with a slight circular motion while progressing forward. The tip should form an angle of approximately 45 deg with the plate surface, and the flame should point in the welding direction (figs. 6–5 and 6–6).

(2) To increase the depth of fusion either increase the angle between the tip and the plate surface or decrease the welding speed. The size of the puddle should not be too large because this will cause the flame to burn through the plate. A properly made bead weld, without the addition of filler rod, will be

slightly below the upper surface of the plate, and a ridge will form on the under side to indicate full penetration (fig. 6–5). A bead weld with filler rod shows a buildup on the surface of the plate.

(3) A small puddle should be formed on the surface when making a bead weld with a welding rod (fig. 6–6). The welding rod is inserted into the puddle and then the base plate and rod are melted together. The torch should be moved slightly from side to side to obtain good fusion. By varying the speed of welding and the amount of metal deposited from the welding rod the size of the welding bead can be controlled to any desired limit.

b. *Butt Welds.*

(1) Several types of joints are used to make butt welds in the flat position. These are illustrated in figures 3–4 and 3–5 and described in paragraph 3–14.

(2) Tack welds should be used to keep the heavier plates alined. The lighter sheets should be spaced to allow for weld metal contraction and thus prevent warpage.

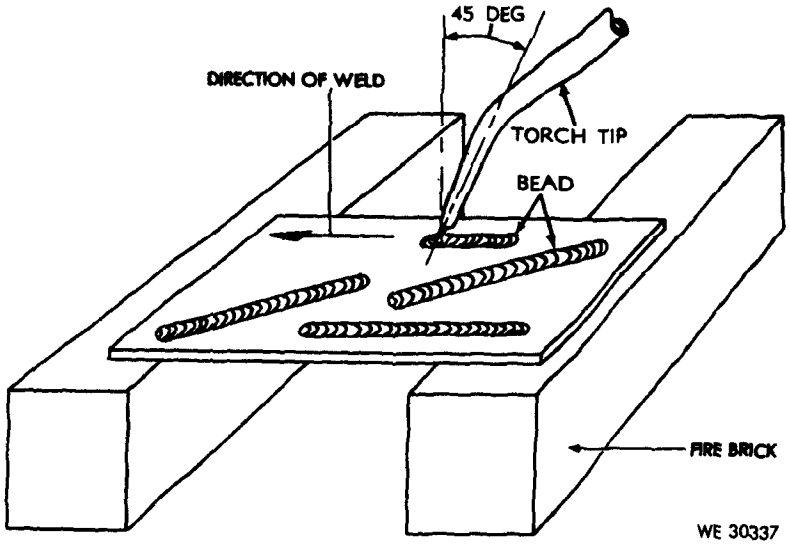

Figure 6–5. Bead welds without a welding rod.

(3) The following guide should be used for selecting the number of passes (fig. 6–4) in butt welding steel plates.

Plate thickness, in.	*Number of passes*
⅛ to ¼	1
⅜ to ⅝	2
⅝ to ⅞	3
⅞ to 1⅛	4

(4) The position of the welding rod and torch tip in making a flat position butt joint

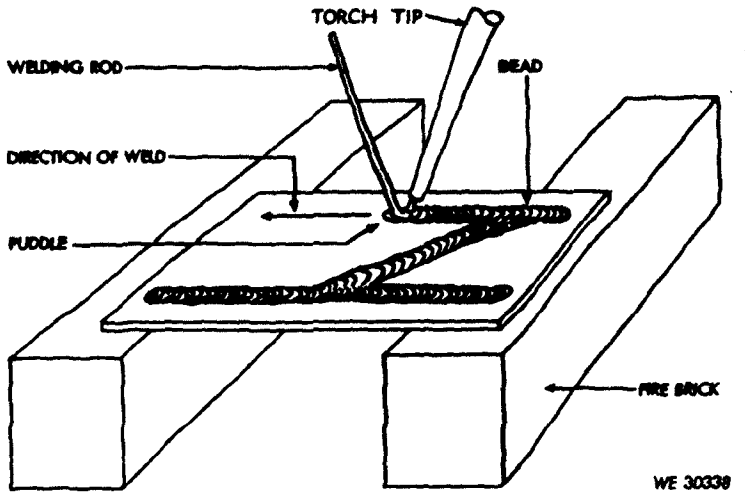

Figure 6–6. Bead welds with a welding rod.

is shown in figure 6–7. The motion of the flame should be controlled so as to melt the side walls of the plates and enough of the welding rod to produce a puddle of the desired size. By oscillating the torch tips and welding rod a molten puddle of a given size can be carried along the joint at a speed which will insure both complete penetration and sufficient filler metal to provide some reinforcement at the weld.

(5) Care should be taken not to overheat the molten puddle. This will result in burning the metal, porosity, and low strength in the completed weld.

6–8. Vertical Position Welding

a. When welding is done on a vertical surface the molten metal has a tendency to run downward and pile up. A weld that is not carefully made will result in a joint with excessive reinforcement at the lower end and some undercutting on the surface of the plates.

b. The flow of metal can be controlled by pointing the flame upward at an angle of 45 deg to the plate, and holding the rod between the flame and the molten puddle (fig. 6–8). The flow of gases from the inclined tip keeps the metal from sagging or falling and insures good penetration and fusion at the joint. Both the torch and welding rod should be oscillated to deposit a uniform bead. The welding rod should be held slightly above the center line of the joint, and the welding flame should sweep the molten metal across the joint to distribute it evenly.

c. Butt joints welded in the vertical position

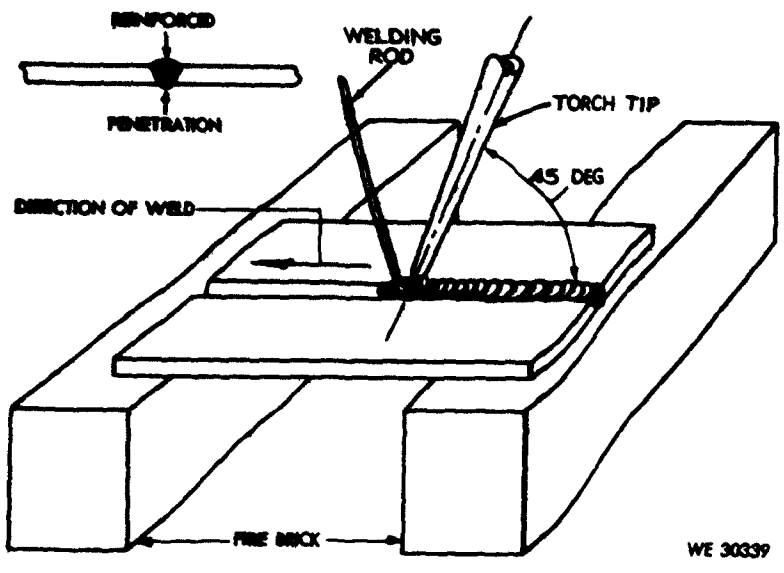

Figure 6–7. Position of rod and torch for a butt weld in a flat position.

should be prepared for welding in the same manner as that required for welding in the flat position (par. 6–7b).

6–9. Overhead Position Welding

a. *Bead Welds.* In overhead welding the metal deposited tends to drop or sag on the plate causing the bead to have a high crown. To overcome this difficulty the molten puddle should be kept small and enough filler metal should be added to obtain good fusion with some reinforcement at the bead. If the puddle becomes too large the flame should be removed for an instant to permit the weld metal to freeze. When welding light sheets the puddle size can be controlled by applying the heat equally to the base metal and filler rod.

b. *Butt Joints.* The torch and welding rod position for welding overhead butt joints is shown in figure 6–9. The flame should be directed so as to melt both edges of the joint, and sufficient filler metal should be added to maintain an adequate puddle with sufficient reinforcement. The welding flame should support the molten metal and distribute it along the joint. Only a small puddle is required so a small welding rod should be used. Care should be taken to control the heat to avoid burning through the plates. This is particularly important when welding is done from one side only.

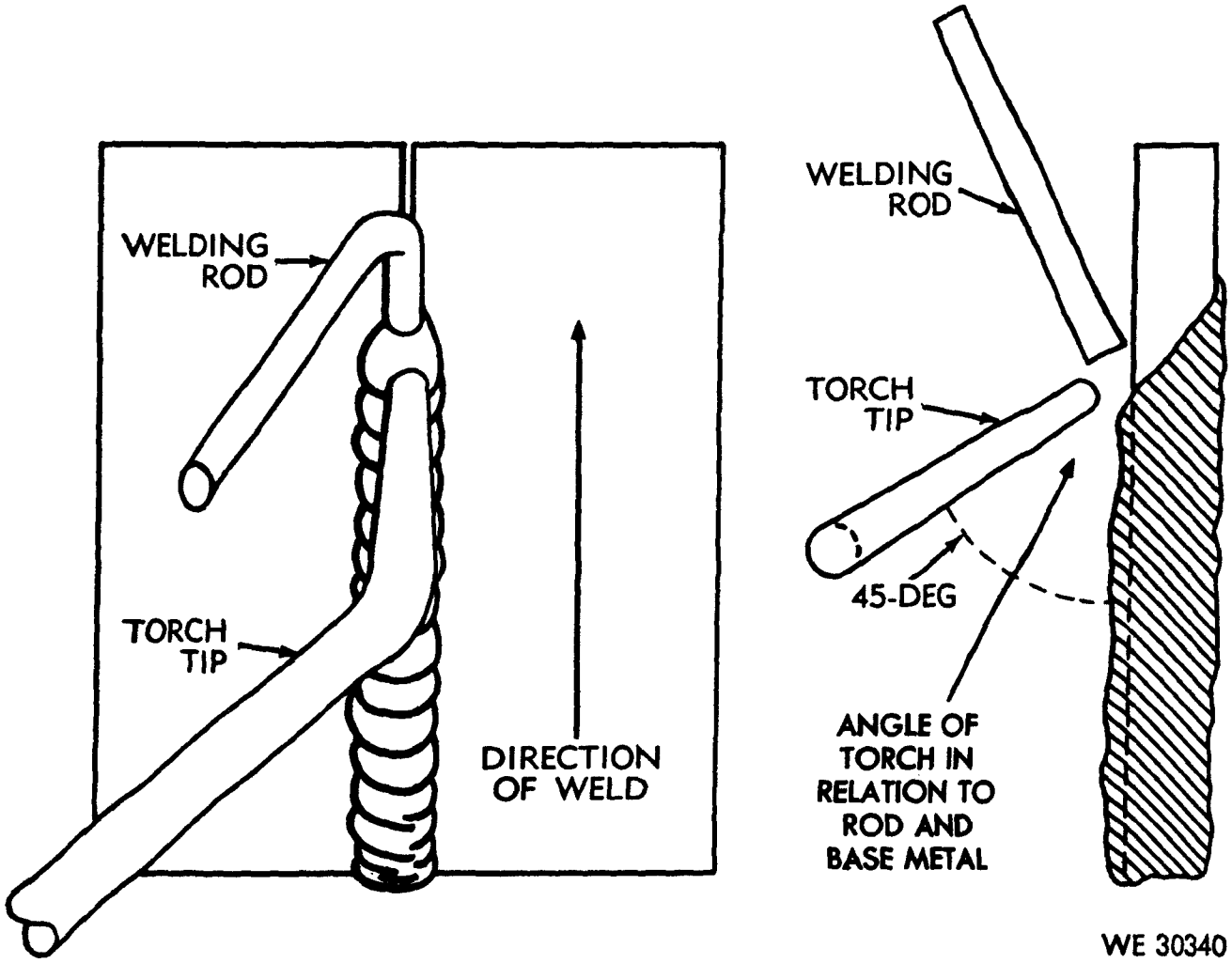

Figure 6–8. Welding a butt joint in the vertical position.

Section II. WELDING AND BRAZING FERROUS METALS

6–10. General

a. *Welding Sheet Metal.* For welding purposes the term "sheet metal" is restricted to thicknesses of metals up to and including 1/8-inch.

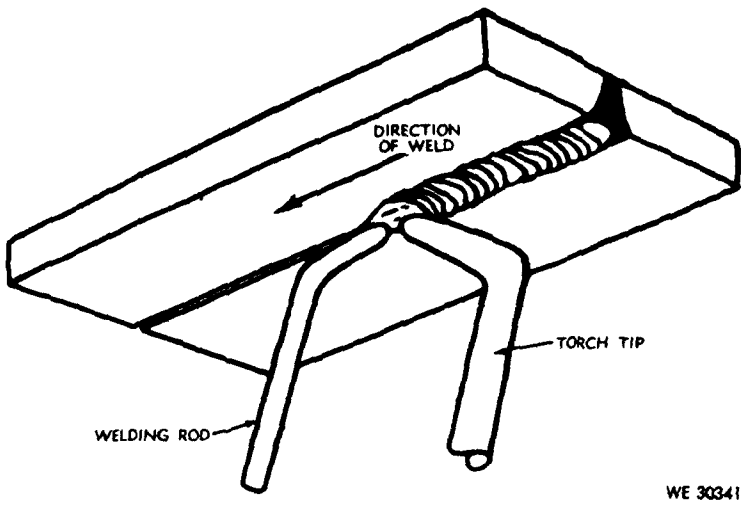

Figure 6–9. Welding a butt joint in the overhead position.

(1) Welds in sheet metal up to 1/16-inch thick can be made satisfactorily by flanging the edges at the joint. The flanges must be at least equal to the thickness of the metal. The edges should be alined with the flanges in a vertical position and then tack welded every 5 or 6 inches. Heavy angles or bars (fig. 3–17) should be clamped on each side of the joint to prevent distortion or buckling. The raised edges are equally melted by the welding flame. This produces a weld nearly flush with the sheet metal surface. By controlling the welding speed and the flame motion good fusion to the underside of the sheet can be obtained without burning through. A plain square butt joint can also be made on sheet metal up to 1/16-inch thic by using a rust resisting copper coated low carbon filler rod 1/16-inch in diameter. The method of alining the joint and tacking the edges is the same as that used for welding flanged edge joints.

(2) Where it is necessary to make an inside edge or corner weld there is danger of burning through the sheet unless special care is taken to control the welding heat. Such welds can be made satisfactorily in sheet metal up to 1/16-in thick by following the procedures below:

(a) Heat the end of a 1/8-inch low carbon welding rod until approximately 1/2 inch of the rod is molten.

(b) Hold the rod so that the molten end is above the joint to be welded.

(c) By sweeping the flame across the molten end of the rod the metal can be removed and deposited on the seam. The quantity of molten weld metal is relatively large as compared with the light gage sheet and its heat is sufficient to preheat the sheet metal. By passing the flame quickly back and forth the filler metal is distributed along the joint and the additional heat supplied by the flame will produce complete fusion. This method of welding can be used for making difficult repairs on automobile bodies, metal containers, and similar applications.

(3) For sheet metal 1/16 to 1/8-inch thick a butt joint, with a space of approximately 1/8-inch between the edges, should be prepared. A 1/8-inch diameter copper coated low carbon filler rod should be used. Sheet metal welding with a filler rod on butt joints should be done by the forehand method of welding.

b. *Welding Steel.*

(1) The term "steel" may be applied to many ferrous metals which differ greatly in both chemical and physical properties. In general they may be divided into plain carbon and alloy groups. By following the proper procedures most steels can be successfully welded. However, parts fabricated by welding generally contain less than 0.30 points carbon. Heat increases the carbon combining power of steel and care must be taken during all welding processes to avoid carbon pickup.

(2) Steel heated with an oxy-acetylene flame becomes fluid between 2,450 and 2,750 deg F., depending on its composition. It passes through a soft range between the solid and liquid state. This soft range enables the operator to control the weld. To produce a weld with good fusion the welding rod should be placed in the molten puddle; then the rod and base metal should be melted together so that they will solidify to form a solid joint. Care should be taken to avoid heating a large portion of the

joint, because this will dissipate the heat and may cause some of the weld metal to adhere to but not fuse with the sides of the welded joint. The flame should be so directed against the sides and bottom of the welded joint that complete penetration of the lower section of the joint is obtained. Weld metal should be added in sufficient quantities to fill the joint without leaving any undercut or overlap. Do not overheat because this will burn the weld metal and weaken the finished joint.

(3) Oxygen, carbon, and nitrogen act to produce defective weld metal because they tend to increase porosity, blowholes, oxides, and slag inclusions.

(a) When oxygen combines with steel to form iron oxides at high temperatures, care should be taken to insure that all the oxides formed are removed by proper manipulation of the rod and torch flame. An oxidizing flame (par. 6–3b(3)) causes the steel to foam and give off sparks. The oxides formed are distributed through the metal and cause a brittle, porous weld. Oxides that form on the surface of the finished weld can be removed by wire brushing after cooling.

(b) A carburizing flame (par. 6–3b(2)) add carbon to the molten steel and causes boiling of the metal. Steel welds made with strongly carburizing flames are hard and brittle.

(c) Nitrogen from the atmosphere will combine with molten steel to form nitrides of iron, which impair its strength and ductility if included in sufficient quantities.

(d) By controlling the melting rate of the base metal and welding rod, the size of the puddle, the speed of welding, and the flame adjustment, the inclusion of impurities from the above sources may be held to a minimum.

c. *Welding Steel Plates.*

(1) Plates may be spaced up to 3/16-inch, depending on the thickness, to permit entry of the flame and welding rod to the joint base. Proper allowance should be made for expansion and contraction in order to eliminate warping of the plates or cracking of the weld. Figures 3–4 and 3–5 show edge preparation for different thicknesses of metal and figure 3–16 shows the method used for counteracting contraction.

(2) The edges of heavy section steel plates (more than 3/16-inch thick) should be beveled (fig. 3–5) to obtain full penetration of the weld metal and good fusion at the joint. Use the forehand method of welding (par. 6–4).

(3) Plates ½ to ¾-inch thick should be prepared for a U type joint (fig. 3–5) in all cases; the root face (fig. 3–3) is provided at the base of the joint to cushion the first bead or layer of weld metal. The backhand method (par. 6–5) is generally used in welding these plates.

(4) The edges of plates ¾-inch or thicker are usually prepared by using the double V or double U type joint (fig. 3–5) when welding can be done from both sides of the plate. A single V or single U joint is used for all plate thicknesses when welding is done from one side of the plate.

d. *General Principles in Welding Steel.* The basic principles outlined below should be observed when welding steel with the oxy-acetylene flame.

(1) A well balanced neutral flame (par. 6–3b(1)) is used for welding most steels. To be sure that the flame is not oxidizing it is sometimes used with a slight acetylene feather. A very slight excess of acetylene may be used for welding alloys with a high carbon, chromium, or nickel content. However, increased welding speeds are possible by using a slightly reducing flame. Avoid excessive gas pressure because it gives a harsh flame, often results in cold shuts or laps, and makes melting metal control difficult.

(2) The tip size and volume of flame used should be sufficient to reduce the metal to a fully molten state and to produce complete joint penetration. Care should be taken to avoid the formation of molten metal drip beads from the bottom of the joint. The flame should bring the joint edges to the fusion point ahead of the puddle as the weld progresses.

(3) The pool of the molten metal should progress evenly down the seam as the weld is being made.

(4) The inner cone tip of the flame should not be permitted to come in contact with the welding rod, molten puddle, or base metal. The flame should be manipulated so that the molten metal is protected from the atmosphere by the envelope or outer flame.

(5) The end of the welding rod should be

melted by placing it in the puddle under the protection of the enveloping flame. The rod should not be melted above the puddle and allowed to drip into it.

6–11. Low Carbon Steel

a. In general no difficulties are encountered in welding low carbon steels and the procedures prescribed in paragraph 6–10 for welding steels apply to these metals. Properly made low carbon steel welds will equal or exceed the base metal in strength.

b. Copper coated low carbon rods should be used for welding low carbon steel. The rod sizes for various plate thicknesses are as follows:

Plate thickness, inch	*Rod diameter, inch*
1/16 to ⅛	1/16
⅛ to ⅜	⅛
⅜ to ½	3/16
½ and heavier	¼

Note. **Rod from 5/16 to 3 8 inch are available for heavy welding. However, heavy welds can be made with the 3/16 or 1/4-inch rods by properly controlling the puddle and melting rate of the rod.**

c. The joints may be prepared by flame cutting or machining. The type of preparation (fig. 3–5) will be determined by the plate thickness and the welding position.

d. No preheating, except to remove the chill from the plates, is required.

e. The flame should be adjusted to neutral. Either the forehand (par. 6–4) or backhand (par. 6–5) welding method may be used, depending on the thickness of the plates being welded.

f. Do not overheat the molten metal because this will cause the metal to boil and spark excessively. The resultant grain structure of the weld area will be large, the strength will be lowered, and the weld will be badly scaled.

g. Low carbon steels do not harden in the fusion zone as a result of welding heat.

6–12. Medium Carbon Steel

a. The steels in this group are usually heat treated to develop hardness and strength in the finished part. When heat treated steels are welded they should be preheated from 300 to 500 deg F., depending on the carbon content (0.25 to 0.45 percent) and the thickness of the steel. The preheating temperature can be checked by applying a stick of 50–50 solder (melting point 450 deg F.) to the plate at the joint and noting when the solder begins to melt.

b. Small parts should be annealed to induce softness before welding. The parts should be preheated at the joint and welded with a filler rod that produces heat treatable welds. After welding the entire piece should be heat treated to restore its original properties.

c. Either a low carbon or high strength rod can be used for welding medium carbon steels. The welding flame should be adjusted to slightly carburizing (par. 6–3b(2)) and the puddle of metal kept as small as practicable to make a sound joint. Welding with a carburizing flame causes the metal to heat quickly, because heat is given off when steel absorbs carbon. This permits welding at higher speeds.

d. Care should be taken to slowly cool the parts after welding to prevent cracking of the weld. The entire welded part should be stress relieved by heating between 1,100 and 1,250 deg F., for 1 hour per inch of thickness, and then slowly cooling. Slow cooling can be accomplished by covering the parts with asbestos or sand.

e. Medium carbon steels can be braze welded by using a preheat of 200 to 400 deg F., a good bronze rod, and a brazing flux. However, these steels are more satisfactorily welded by the metal arc process with mild steel shielded-arc electrodes.

6–13. High Carbon Steels

a. These steels are more difficult to weld because of their high carbon content and the heat treatment given them to develop special properties. The welding heat changes these properties in the vicinity of the weld. To restore the original properties heat treatment is necessary.

b. These steels should be preheated from 500 to 800 deg F., before welding. The preheating temperature can be checked with a pine sitck which will char at these temperatures.

c. Since high carbon steels melt at a lower temperature than low and medium carbon steels care should be taken not to overheat the weld or base metal. Overheating is indicated by excessive sparking of the molten metal.

Welding should be completed as soon as possible and the amount of sparking should be used as a check on the welding heat. The flame should be adjusted to carburizing (par. 6–3b (2)) because this type of flame tends to produce sound welds.

d. Either a medium or high carbon welding rod should be used to make the weld. After welding the entire piece should be stress relieved by heating between 1,200 and 1,450 deg F., for 1 hour per inch of thickness, and then slowly cooling. If the parts can be easily softened before welding a high carbon welding rod should be used to make the joint. The entire piece should then be heat treated to restore the original properties of the base metal.

e. In some cases minor repairs to these steels can be made by brazing. This process does not require temperatures as high as those used for welding so the properties of the base metal are not seriously affected. Brazing should only be used in special cases because the strength of the joint is not as high as the original base metal.

6–14. Tool Steels

a. These steels are seldom welded because of the difficulty in controlling the properties of the metal. Their high carbon content and the heat treatment given to these steels make them sensitive to welding heat unless uniformly high preheating temperatures (up to 1000 deg F.) are used.

b. In general the same precautions should be taken as those required for welding high carbon steels (par. 6–13). The welding flame should be adjusted to carburizing (par. 6–3b(2)) to prevent burning out the carbon in the weld metal. The welding should be done as quickly as possible, taking care not to overheat the molten metal. After welding the steel should be heat treated to restore its original properties.

c. Drill rods can be used as filler rods because their high carbon content compares closely with that of tool steels.

d. A flux suitable for welding cast iron would be used in small quantities to protect the puddle of high carbon steel and to remove oxides in the weld metal.

6–15. Chrome Molybdenum Alloy Steels

a. These steels may be welded satisfactorily by all methods and processes. The oxy-acetylene flame is generally preferred for welding thin walled tubing and light gage sheet metal. For materials greater than 3/32-inch thick the electric arc is preferred because the heat zone will be narrower; and as a result the base metal will be less effected by the heat stresses. This is a special advantage where the part is too large to be heat treated to relieve welding stresses.

b. The welding technique with the oxy-acetylene flame is about the same as that required for carbon steels. The area surrounding the weld should be preheated between 300 and 800 deg F., depending on the thickness of the metal. This is necessary because a sudden application of flame without preliminary heating might cause the formation of cracks in the heated area. The flame should be directed on the metal at such an angle that preheating takes place ahead of the weld.

c. A copper coated low carbon welding rod is used for general welding of this metal with the oxy-acetylene flame. Chrome molybdenum or high strength rods may be used for joints requiring high strength. The strength of parts welded with these rods can be increased by heat treatment.

d. A neutral or slightly carburizing (par. 6–3b(1) and (2)) flame must always be used. An oxidizing flame burns and weakens the steel. A weld made with this flame may crack on cooling if contraction is restrained. A highly carburizing flame makes the metal brittle and will cause cracking on cooling. The volume of flame should be just large enough to melt the base metal and to obtain good fusion.

e. Overheating the metal will set up severe stresses and cause excessive grain growth. This condition produces low strength in the weld and the adjacent base metal.

f. The weld should be protected from the air as much as possible to avoid scaling and rapid cooling. When available, a jet of hydrogen directed on the metal from the side opposite the weld will reduce scaling caused by oxidation, and will add strength to the finished part by eliminating air hardening around the weld.

g. When jigs or fixtures are used they should be designed to allow a maximum amount of movement to avoid distortion or cracking due to contraction as the metal cools.

6–16. Chrome Nickel Corrosion Resistant Steels

a. These metals are commonly referred to as stainless steels and are weldable by all processes. Welds made under proper conditions with either the electric arc or the oxy-acetylene flame will develop a strength equal to that of the base metal in an annealed condition.

b. These steels have a melting point of 2,400 to 2,600 deg F. The coefficient of expansion is about 50 percent greater than that of carbon steels, and the thermal conductivity is from one-third to one-half less. Extra care should be taken to provide for expansion and contraction when welding these steels. Either method described below is satisfactory for controlling expansion and contraction in butt welding sheets and plates of these metals.

(1) Set up the work with the edges separated a distance equal to the metal thickness and tack-weld at intervals of 2-inches.

(2) Separate the edges so that at the starting point the spacing is equal to the metal thickness, but gradually widens at the rate of 3/8-inch per foot of seam length (fig. 3–16). Make a continuous weld from the starting point.

c. During welding the corrosion resistant properties in the weld metal and in the adjacent base metal will be reduced unless the steps below are taken to offset this action.

(1) When either columbium (niobium) or titanium is added to the base metal or welding rod carbides do not form at the grain boundaries, and the metal retains its corrosion-resistant properties.

(2) If the metal can be heated uniformly from 1,850 to 2,100 deg F., after welding and then quickly cooled these carbides will be put back in solution, and the corrosion resistant properties will be restored. An air quench is considered sufficiently rapid for thicknesses up to 0.0625-inch, while heavier sheets and plates will require a water quench to accomplish the desired result.

d. Corrosion resistant steels oxidize readily if heated with an excess oxygen flame. As oxides formed in this manner prevent good fusion, careful attention must be given to the adjustment of the welding flame. A strictly neutral flame is most desirable but is difficult to maintain and may change from the neutral to the oxidizing flame without being noticed. For this reason a slight carburizing flame should be used in most cases. The feather or brushlike second cone, indicating an excess of acetylene, should not extend more than 1/16-inch beyond the tip of the inner cone. If the flame contains more acetylene than is required the hot metal will take up the free carbon and produce a brittle weld. An increase in carbon content will also reduce the corrosion resistance of the metal.

e. Corrosion resistant steel should be well protected from atmospheric oxygen and nitrogen during welding to prevent their combining with the hot metal. The flux used for oxy-acetylene welding is obtainable in powder form and is mixed in clean, cold water to form a cream like paste. A film of the flux should be brushed on both sides of the joint and also applied to the rod. When allowed to dry the flux protects the metal that cannot be covered with the flame.

f. The end of the rod should be kept within the limits of the flame envelope and added to the weld by allowing it to melt and flow into the molten puddle. Stirring or puddling the hot metal with the rod is not necessary and should be avoided.

g. The welding tip may be one size smaller than is used for a similar thickness of ordinary carbon steel. It should be in good condition and should not give a flame that forks or spreads.

h. When welding sheet metal the sections should be held in alignment by a jig whenever possible. However, the clamps should allow some movement to prevent cracking. Chill bars applied along the edges of the weld will reduce conduction of heat into the sheet. After the weld has been started it should be continued until the joint is completed. If for any reason the weld is stopped midway in a joint it must not be started again without first preheating the metal to a red heat for several inches beyond the end of the existing weld. After the weld is completed remove all scale, slag, and remaining flux with a wire brush.

6–17. High Tensile Low Alloy Steel

a. This group includes nickel alloy steel, nickel copper alloy steels, manganese molybde-

num alloy steels, carbon molybdenum alloy steels, nickel chromium alloy steels, chrome molybdenum alloy steels, and chrome vanadium alloy steels.

b. These steels should be welded with rods that have the same composition as the base metal or will produce the same properties in the weld that exist in the base metal. Where resistance to corrosion is desired rods having the same composition as the base metal produce the best results. Heat treatment after welding is required to develop welded joints of good quality.

6–18. Other Alloy Steels

High manganese cast steel is welded with a nickel manganese steel rod and requires no preheating. Alloy steels not described in the foregoing paragraphs covering steel are usually welded with rods of the same composition as the base metal.

6–19. Cast Iron

a. *Preheating.* Cast iron should be preheated to a dull red heat (750 to 900 deg F.) before welding to equalize expansion and contraction stresses. Heating of the entire casting is desirable, except thin sections which are wholly restricted. This preheating can be performed with an acetylene torch, a furnace heated by charcoal, oil or gas burners, or other available sources of heat. If the preheating is not uniform the finished weld will be warped, and cracks may appear on the surface or in the weld metal. Preheating also helps to soften the casting because the carbon in the weld metal will separate as graphite. When the preheated metal is allowed to cool slowly the finished weld will have a minimum of cooling stresses, internal strains, and can be machined without difficulty. Slow cooling is achieved by covering the entire casting with asbestos cloth or other suitable high temperature insulating material. If the casting is not cooled slowly after welding the weld area will be transformed into white cast iron. White cast iron is very brittle, difficult to machine, and may crack when the assembled part is used.

b. *Preparation for Welding.* Scale, cutting slag, grease, and dirt must be completely removed from the parts to be welded by grinding, wire brushing, sandblasting, etc. Cracks in casting should be chipped out with a cold chisel to form a 90 deg V and should extend to approximately ⅛-inch from the bottom of the crack. A 120 deg V is sometimes desirable when the weld is made from one side only. A hole drilled at the extreme end or ends of a crack will prevent it from spreading during welding.

c. *Welding Rod.* The welding rod is cast iron with a melting point as low as practical. It must be free of nonmetallic inclusions, low in phosphorus and sulfur content.

d. *Flux.* Flux must be used in welding cast iron to remove the slag that forms on the cast iron puddle. The flux acts to clean the metal, remove slag inclusions, prevent porosity, and provide a sound weld. Fluxed welding rods are obtainable but usually the flux is applied by dipping the hot rod into the flux and transferring it to the molten puddle as required to overcome momentary difficulties.

e. *Welding Method.* The torch should be adjusted to give a neutral flame (par. 6–3b(1)). The flame should be pointed toward the finished weld (backhand welding) and the inner cone tip should be approximately ⅛ to ¼-inch away from the molten puddle. A slight weaving motion should be used to melt down the sides and penetrate to the bottom of the V.

(1) In general the same precautions should be taken as in welding steel. The end of the welding rod should be heated, dipped into the flux, placed in the weld metal puddle, and gradually melted. The rod should not be held above the weld and melted drop by drop. Care should be taken that the sides of the bevel are completely melted and that the weld metal does not come in contact with cold base metal. The rod should be used to puddle out any slag, dirt, or blowholes that may occur during welding.

(2) Care should be taken not to overheat the metal and thus cause the puddle to run away or burn through. The rod should be dipped into the flux often enough to insure fluidity of the weld metal. The preferred technique is to deposit the weld in layers not exceeding ⅛-inch thick, and to build the weld slightly above the level of the base metal to provide some reinforcement.

(3) Allowances should be made for expansion during heating and contraction while cooling, and the parts to be welded should be alined in such a manner that the welded pieces assume the desired shape.

(4) Cast iron welding should be carried on as rapidly as possible. When the weld has been completed the entire piece should be reheated at a uniform rate (1,100 to 1,150 deg F.), and held at this temperature for 1 hour per inch of thickness; then cooled at a rate not to exceed 50 deg F., per hour. This process will relieve stresses and strains caused by welding. Cooling may be accomplished in the stress relieving furnace, or by covering the reheated piece with asbestos or other heat insulating material.

f. *Localized Preheating of Large Castings.* When a section of a large casting to be welded is so located that the weld can be made without upsetting the entire casting, local preheating may be used. In welding large castings, sections of which vary in thickness, the preheating should be controlled so as not to overheat and wrap the lighter sections.

g. *Sealing Porous Cast Iron Welds.*

(1) Welds in cast iron castings, such as cylinder blocks, must be free from pores, minute cracks, and other defects that will cause leakage. In order to insure watertightness a sealing coat made of powdered sulfur and fine graphite powder may be used. This material is prepared by melting four to five parts of sulfur and adding one part of graphite. The graphite is thoroughly mixed with the melted sulfur. If the mixture should ignite it can be extinguished by smothering with asbestos paper. The material is cast into long bars by pouring the mixture into the V of an angle iron section lined with paper. The cast bar is removed when cold and the paper scraped off before the sealing material is applied to the weld.

(2) Welds made on cast iron castings should be coated with this sealing material while the weld is still hot. The end of the cast bar is rubbed onto the hot weld. A small portion will melt and form a thin film on the weld. This application will penetrate into the small pores and cracks providing an effective seal when cool. All surface scale, slag, and other foreign material must be brushed from the weld before the sealing material is applied. This sealing material can be applied to cold welds by careful heating of the weld with the oxy-acetylene torch.

6–20. Brazing Gray Cast Iron

a. Gray cast iron can be brazed with very little or no preheating. For this reason broken castings that would otherwise need to be dismantled and preheated can be brazed in place. A nonferrous filler metal such as naval brass (60 percent copper, 39.25 percent zinc, 0.75 percent tin) is satisfactory for this purpose. A sufficiently high strength bond cannot be obtained with silver brazing alloys. The melting point of the nonferrous filler metal is several hundred degrees lower than the cast iron; consequently the work can be accomplished with a lower heat input, the deposition of metal is greater, and the brazing can be accomplished faster. Because of the lower heat required for brazing the thermal stresses developed are less severe and stress relief heat treatment is usually not required.

b. The preparation of large castings for brazing is much like that required for welding with cast iron rods. The joint to be brazed must be clean and the part must be sufficiently warm to prevent chilling of the filler metal before sufficient penetration and bonding are obtained. When possible the joint should be brazed from both sides to insure uniform strength throughout the weld. In heavy sections the edges should be beveled to form a 60 to 90 deg V.

6–21. Brazing Malleable Iron

Malleable iron castings are usually repaired by brazing because the heat required for fusion welding will destroy the properties of malleable iron. Because of the special heat treatment required to develop malleability, it would be impossible to completely restore these properties by simply annealing. Where special heat treatment can be performed welding with a cast iron filler rod and remalleabilizing are feasible.

Section III. WELDING, BRAZING, AND SOLDERING NONFERROUS METALS

6–22. Aluminum Welding

a. *General.* Aluminum is readily joined by welding, brazing, and soldering. In many instances aluminum is jointed with the conventional equipment and techniques used with other metals. However, specialized equipment or techniques may sometimes be required. The alloy, joint configuration, strength required appearance, and cost are factors dictating the choice of process. Each process has certain advantages and limitations.

(1) *CHARACTERISTICS OF ALUMINUM.* Aluminum is light in weight, retains good ductibility at subzero temperatures, has high resistance to corrosion, has good electrical and thermal conductivity and high reflectivity to both heat and light. Pure aluminum melts at 1220 deg F. whereas aluminum alloys have an approximate melting range from 900 to 1220 deg F. There is no color change in aluminum when heated to the welding or brazing range.

(2) *ALUMINUM FORMS.* Pure aluminum can be alloyed with many other metals to produce a wide range of physical and mechanical properties. Table 2 shows the major alloying elements in the wrought aluminum alloys. Paragraph 2–6 describes the designation system for aluminum and aluminum alloys. The means by which the alloying elements strengthen aluminum is used as a basis to classify alloys into two catergories: nonheat treatable and heat treatable. Wrought alloys in the form of sheet and plate, tubing, extruded and rolled shapes and forgings have similar joining characteristics regardless of the form. Aluminum alloys are also produced as castings in the form of sand, permanent mold or die castings. Substantially the same welding, brazing, or soldering practices are used on both cast and wrought metal. Die castings have not been widely used where welded construction is required, however, they have been adhesively bonded and to a limited extent soldered. Recent developments in vacuum die casting have improved the quality of the castings to the point where they may be satisfactorily welded for some applications.

(3) *SURFACE PREPARATION.* Since aluminum has a great affinity for oxygen, a film of oxide is always present on its surface. This film must be removed prior to any attempt to weld, braze, or solder the material and it must be prevented from forming during the joining procedure. In preparation of aluminum for welding, brazing, or soldering scrape this film off with a sharp tool, wire brush, sand paper or similar means. The use of inert gases or a generous application of flux prevents the forming of oxidation during the joining process.

b. *Gas Welding.*

(1) *GENERAL.* The gas welding processes most commonly used on aluminum and aluminum alloys are oxy–acetylene and oxy-hydrogen. Hydrogen may be burned with oxygen in the same tips used with acetylene, but flame temperature is lower and larger tip sizes are necessary See Table 12. Oxy-hydrogen welding permits a wider range of gas pressures than acetylene without losing the desired slightly reducing flame. Aluminum from 1/32 to 1–inch thick may be gas welded. Heavier material is seldom gas welded as heat dissipation is so rapid that it is difficult to apply sufficient heat with a torch. When compared with arc welding the weld metal freezing rate of gas welding is very slow. The heat input in gas welding is not as concentrated as in other welding processes and unless precautions are taken greater distortion may result. Minimum distortion is obtained with edge or corner welds.

Table 12. Approximate Conditions for Gas Welding of Aluminum

Metal Thickness In.	Filler Rod Dia. In.	Oxy-Hydrogen*		Oxy-Acetylene		
		Tip Orifice dia. in.	Hydrogen Pressure psi	Tip Orifice dia. in.	Oxygen Pressure psi	Acetylene Pressure psi
0.032	3/32	0.025	1	0.021	1	1
0.064	3/32	0.035	1–3	0.031	1+	1+
0.081	⅛	0.040	2–3	0.035	1+	1+
0.125	5/32	0.55	2–4	0.038	1–2	1–2
0.250	3/16	0.070	4–6	0.046	2–4	2–4
0.325	3/16	0.090	6–7	0.065	4–5	4–5
0.375	3/16	0.110	7–9	0.085	5–7	5–7

* Oxygen pressure cannot be given for oxy-hydrogen burning conditions. Theoretically two volumns of hydrogen are used for burning one of oxygen; however, as much as four volumns may be required. Therefore, oxygen pressure must be determined by trial until the best mixture is obtained.

(2) *EDGE PREPARATION.* Sheet or plate edges must be properly prepared to obtain gas welds of maximum strength are usually prepared the same as for similar thicknesses of steel. However, on material up to 1/16-inch thick the edges can be formed to a 90 deg flange about the same height as the thickness of the material or higher (B and C, fig. 3–7). The flanges prevent excessive warping and buckling and serve as filler metal during welding. Welding without filler rod is normally limited to the pure aluminum alloys, since weld cracking can occur in the higher strength alloys. In gas welding thicknesses over 3/16-inch the edges should be beveled to secure complete penetration. The included angle of bevel may be 60 to 120 deg. Preheating of the parts is recommended for all castings and plate ¼-inch thick or over to avoid severe thermal stresses, insure good penetration, and satisfactory welding speeds. Common practice is to preheat to a temperature of 300 to 500 deg F. Thin material should be warmed with the welding torch prior to welding. Even this slight preheat helps to prevent cracks. Heat treated alloys should not be preheated above 300 deg F., unless they are to be postweld heat treated. Preheating above 600 deg F. will cause a "hot-short" and the metal will deteriorate rapidly.

(3) *PREHEAT TEMPERATURE CHECKING TECHNIQUE.* When suitable pyromic equipment is not available, the following tests can be made to determine heat temperatures above 300 deg F.

(A) *CHAR TEST.* Using a pine stick, rub the end of the stick on the metal being preheated. At temperatures above 300 deg F., the stick will char. The darker the char the higher the temperature.

(B) *CARPENTERS CHALK.* Mark the metal with ordinary blue carpenters chalk, blue line will turn white at the proper preheat temperature.

(C) *HAMMER TEST.* Tap the metal lightly with a hand hammer, the metal loses its ring.

(D) *CARBURIZING TEST.* Carburize the surface of the metal, sooting the entire surface. As the heat from the torch is applied the soot disappears. At the point of soot disappearance, the metal surface is slightly above 300 deg F.

(4) *WELDING FLAME.* A neutral or slightly reducing flame is recommended for welding aluminum. Oxidizing flames will cause the formation of aluminum oxide, resulting in poor fusion and a defective weld.

(5) *WELDING FLUXES.* Aluminum welding flux is designed to remove the aluminum oxide film and exclude oxygen from the vicinity of the puddle.

(a) The fluxes used in gas welding are usually in powder form and are mixed with water to form a thin paste.

(b) The flux should be applied to the seam by brushing, springing, spraying, or other suitable methods. The welding rod should also be coated. The flux will melt below the welding temperature of the metal and form a protective coating on the surface of the puddle. This coating breaks up the oxides, prevents oxidation, and permits slow cooling of the weld.

(c) The aluminum welding fluxes contain chlorides and fluorides, and when in the

presence of moisture, they will attack the base metal. Therefore, all flux remaining on the joints after welding must be completely removed. If the weld is readily accessible it can be cleaned with boiling water and a fine brush. Parts having joints so located that cleaning with a brush and hot water is not practical may be cleaned by an acid dip and a cold or hot water rinse. A 10 percent sulfuric acid cold water solution for 30 minutes or a 5 percent sulfuric acid hot water (150 deg F.) solution for 5 to 10 minutes is used for this purpose.

(5) *WELDING TECHNIQUE.* After the material to be welded has been properly prepared, fluxed, and preheated, the flame is passed in small circles over the starting point until the flux melts. The filler rod should be scraped over the surface at three or four second intervals permitting the filler rod to come clear of the flame each time. The scraping action will reveal when welding can be started without overheating the aluminum. The base metal must be melted before the filler rod is applied. Forehand welding is generally considered best for the welding of aluminum since the flame will preheat the area to be welded. In welding, thin aluminum there is little need for torch movement other than progressing forward. On material 3/16-inch thick and over the torch should be given a uniform lateral motion to distribute the weld metal over the entire width of the weld. A slight back and forth motion will assist the flux in oxide removal. The filler rod should be dipped into the weld puddle periodically and withdrawn from the puddle with a forward motion. This method of withdrawal closes the puddle, prevents porosity, and assists the flux in removing the oxide film. If multiple passes are required remove the slag after each pass with the oxy-acetylene method. This is not necessary, however, for oxy-hydrogen gas welding.

6–23. Aluminum Brazing

a. *General.* Many aluminum alloys can be brazed. Aluminum brazing alloys are used which provide an all aluminum structure with excellent corrosion resistance, good strength and appearance, and which permit any aluminum finishing method. The melting point of the brazing filler metal is relatively close to that of the material being joined. However, the base metal should not be melted as a result close temperature control is necessary. The brazing temperature required for aluminum assemblies is determined by the melting points of the base metal and the brazing filler metal.

b. *Brazing Filler Metal.* Brazing filler metal may be applied in wire form or as shim stock. Brazing sheet consisting of either heat-treatable or nonheat-treatable core alloy and clad on one or both sides with brazing alloy is also available.

c. *Brazing Flux.* Flux is required in all aluminum brazing operations. Aluminum brazing fluxes consist of various combinations of fluorides and chlorides and are supplied as a dry powder. For torch and furnace brazing the flux is mixed with water to make a paste which is brushed, sprayed, dipped, or flowed onto the entire area of the joint and brazing filler metal. Torch and furnace brazing fluxes are quite active, may severely attach thin aluminum, and must be used with care. In dip brazing the bath consists of molten flux. Less active fluxes can be used in this application and thin components can be safely brazed.

d. *Brazed Joint Design.* Brazed joints should be of lap, flange, lock seam, or tee type. Butt or scarf joints are not generally recommended. Tee and line contact joints allow excellent capillary flow and the formation of reinforcing fillets on both sides of the joint. For maximum efficiency lap joints should have an overlap of at least twice the thickness of the thinnest joint member. An overlap greater than ¼-inch may lead to voids or flux inclusions. In this case the use of straight grooves or knurls in the direction of brazing filler metal flow is beneficial. Closed assemblies should allow easy escape of gases, and in dip brazing easy entry as well as drainage of flux. Good design for long laps requires that brazing filler metal flows in one direction only for maximum joint soundness. The joint design must also permit complete postbraze flux removal.

e. *Brazing Fixtures.* Whenever possible parts should be designed to be self jigging. When using fixtures differential expansion can occur between the assembly and the fixture to distort the parts. Stainless steel or inconel springs are often used with fixtures to accommodate differ-

ences in expansion. Fixture material can be mild steel or stainless steel. However, for repetitive furnace brazing operations and for dip brazing to avoid flux bath contamination, fixtures of nickel, inconel or aluminum coated steel are preferred.

f. *Precleaning.* Precleaning is essential for the production of strong leak tight brazed joints. Vapor or solvent cleaning will usually be adequate for the nonheat treatable alloys. For heat treatable alloys, however, chemical cleaning is necessary to remove the thicker oxide film.

g. *Furnace Brazing.* Furnace brazing is performed in gas, oil, or electrically heated furnaces. Temperature regulation within ± 5 deg F., is generally necessary to secure consistent results. Continuous circulation of the furnace atmosphere is desirable since it reduces brazing time and results in more uniform heating. Products of combustion in the furnace can be detrimental to brazing and ultimate serviceability of brazed assemblies in the heat treatable alloys.

h. *Torch Brazing.* Torch brazing differs from furnace brazing in that the heat is localized. Heat is applied to the part until the flux and brazing filler metal melt and wet the surfaces of the base metal. The process resembles gas welding except that the brazing filler metal is more fluid and flows by capillary action. Torch brazing is often used for the attachment of fittings to previously welded or furnace brazed assemblies, joining of return bends, and similar applications.

i. *Dip Brazing.* In dip brazing operations a large amount of molten flux is held in a ceramic pot at the dip brazing temperature. Dip brazing pots are heated internally by direct resistance heating. Low voltage, high current transformers supply alternating current to pure nickel, nickel alloy or carbon electrodes immersed in the bath. Such pots are generally lined with high alumina content fire brick and a refractory mortar.

j. *Postbraze Cleaning.* It is always necessary to clean the brazed assemblies, since brazing fluxes accelerate corrosion if left on the parts. The most satisfactory way of removing the major portion of the flux is to immerse the hot parts in boiling water as soon as possible after the brazing alloy has solidified. The steam formed removes a major amount of residual flux. If distortion from quenching is a problem the part should be allowed to cool in air before being immersed in boiling water. The remaining flux may be removed by a dip in concentrated nitric acid for 5 to 15 minutes, depending upon the design of the part. The acid is removed with a water rinse, preferably in boiling water in order to accelerate drying. An alternate cleaning method is to dip the parts for 5 to 10 minutes in a 10 percent nitric plus ¼ percent hydrofluoric acid solution at room temperature. This treatment is also followed by a hot water rinse. For brazed assemblies consisting of sections thinner than 0.010-inch, and parts where maximum resistance to corrosion is important, a common treatment is to immerse in hot water followed by a dip in a solution of 10 percent nitric acid and 10 percent sodium dichromate for 5 to 10 minutes. This is followed by a hot water rinse. When the parts emerge from the hot water rinse they are immediately dried by forced hot air, as from a unit heater, to prevent staining.

6–24. Aluminum Soldering

a. *General.* Aluminum and aluminum base alloys can be soldered by techniques similar to those used for other metals. Abrasion and reaction soldering are more commonly used with aluminum than with other metals. However, aluminum requires special fluxes. Rosin fluxes are not satisfactory.

b. *Solderability of Aluminum Alloys.* The most readily soldered aluminum alloys contain no more than 1 percent magnesium or 5 percent silicon. Alloys containing greater amounts of these constituents possess poor flux wetting characteristics. High copper and zinc containing alloys have poor soldering characteristics because of rapid solder penetration and loss of properties.

c. *Joint Design.* The designs used for soldering aluminum assemblies are similar to those used with other metals. The most commonly used design are forms of simple lap, crimp and T-type joints. Joint clearance varies with the specific soldering method, base alloy combination, solder composition, joint design and flux composition employed. However, as a guide, joint clearance ranging from 0.005 to 0.020-

inch is required when chemical fluxes are used, and 0.002 to 0.010-inch spacing is employed when a reaction type flux is used.

d. *Preparation for Soldering.* Grease, dirt, and other foreign material must be removed from the surface of aluminum before soldering. In most cases only solvent degreasing is required. However, if the surface is heavily oxidized wire brushing or chemical cleaning may be required.

e. *Soldering Techniques.* The higher melting point solders normally used to join aluminum assemblies plus the excellent thermal conductivity of aluminum dictate that a large capacity heat source must be used to bring the joint area to proper soldering temperature. Uniform, well controlled heating should be provided. Tinning of the aluminum surface can best be accomplished by covering the material with a molten puddle of solder and then scrubbing the surface with a non-heat absorbing item such as a glass fiber brush, serrated wooden stick or fiber block. Wire brush or other metallic substance are not recommended since they tend to leave metallic deposits, absorb heat, and quickly freeze the solder.

f. *Solders.* The commercial solders for aluminum can be classified into three general groups according to their melting points.

(1) *LOW TEMPERATURE SOLDERS.* The melting point of these solders is between 300 and 500 deg F. Solders in this group contain tin, lead, zinc and/or cadmium and produce joints with the least corrosion resistance.

(2) *INTERMEDIATE TEMPERATURE SOLDERS.* These solders melt between 500 and 700 deg F. Solders in this group contain tin or cadmium in various combinations with zinc, plus small amounts of aluminum, copper, nickel or silver, and lead.

(3) *HIGH TEMPERATURE SOLDERS.* These solders melt between 700 and 800 deg F. These zinc base solders contain 3 to 10 percent aluminum, and small amounts of other metals such as copper, silver, nickel and iron to modify their melting and wetting characteristics. The high zinc solders have the highest strength of the aluminum solders, and form the most corrosion resistant soldered assemblies.

6-25. Copper Welding

a. Copper has a high termal conductivity; consequently the heat required for welding is approximately twice that required for steel of similar thickness. To offset this loss of heat a tip one or two sizes larger than that required for steel is recommended. When welding large sections or heavy thicknesses supplementary heating with a charcoal fire, a separate heating unit, or another torch is advisable. This makes a weld that is less porous than one made by preheating and welding with the same torch.

b. Copper may be welded with a slightly oxidizing flame whereby the molten metal is protected by the oxide which is formed by the flame. If a flux is used to protect the molten metal the flame should be neutral.

c. Oxygen free copper (deoxidized copper rod) rather than oxygen bearing copper should be used for gas welded assemblies and the welding rod should be of the same composition as the base metal.

d. In welding copper to sheets the heat is conducted away from the welding zone so rapidly that it is difficult to bring the temperature up to the fusion point. It is often necessary to raise the temperature level of the sheet in a large area, 6 inches to a foot away from the weld, nearly to red heat before a welding torch of the usual size is effective in welding the edges. The weld should be started at some point away from the end of the joint and welded back to the end with filler metal being added. Then, after returning to the starting point, the weld should be started and made in the opposite direction to the other end of the seam. During the operation the torch should be held at approximately a 60 deg angle to the base metal.

e. It is advisable to back up the seam on the underside with carbon, asbestos, or thin sheet metal to prevent uneven penetration. These materials should be channeled or undercut to permit complete fusion to the base of the joint. The metal on each side of the weld should be covered with asbestos to prevent radiation of heat into the atmosphere, and by so doing allow the molten metal in the weld to solidify and cool slowly.

f. The welding speed should be uniform and the end of the filler rod should be kept in the molten puddle. During all of the welding operation the molten metal must be protected by the outer flame envelope. If the metal fails to flow freely during the operation the rod should be raised and the base metal heated to a red heat along the seam. The weld should be started again and continued until the seam weld is completed.

g. In welding thin sheets the forehand we[illegible]ing method is preferred, while the backha[illegible] method is preferred for thicknesses of ¼ inch or more. For sheets up to ⅛-inch thick a plain butt joint with squared edges is preferred. For thicknesses greater than ⅛ inch the edges should be beveled at an angle of 60 to 90 deg, in order to obtain penetration without spreading fusion over a wide area.

6–26. Copper Brazing

a. Both oxygen bearing and oxygen free copper can be brazed to produce a joint with satisfactory properties. The full strength of an annealed copper brazed joint will be developed with a lap joint (C, fig. 6–10).

b. The flame used should be slightly carburizing. All of the silver brazing alloys can be used with the proper fluxes. With the copper-phosphorous or copper-phosphorous-silver alloys a brazed joint can be made without a flux, although the use of flux will result in a joint of better appearance.

c. Butt, lap, and scarf joints are used in brazing operations, whether the joint members are flat, round, tubular, or of irregular cross sections. Clearances to permit the penetration of the filler metal, except large diameter pipe joints, should not be more than 0.002 to 0.003-inch. The clearances of large diameter pipe joints may be 0.008 to 0.10-inch. The correct method of making a butt joint with brazing alloys is shown at B, figure 6–10; a lap joint is shown at C, figure 6–10. The joint may be made with inserts of the filler metal or the filler metal may be fed in from the outside after the joint has been brought up to the proper temperature. The scarf joint shown in D, figure 6–10, is used in joining bandsaws and for joints where the double thickness of the lap joint is not desired. The joints E and F, figure 6–10, have advantages common to all lap joints.

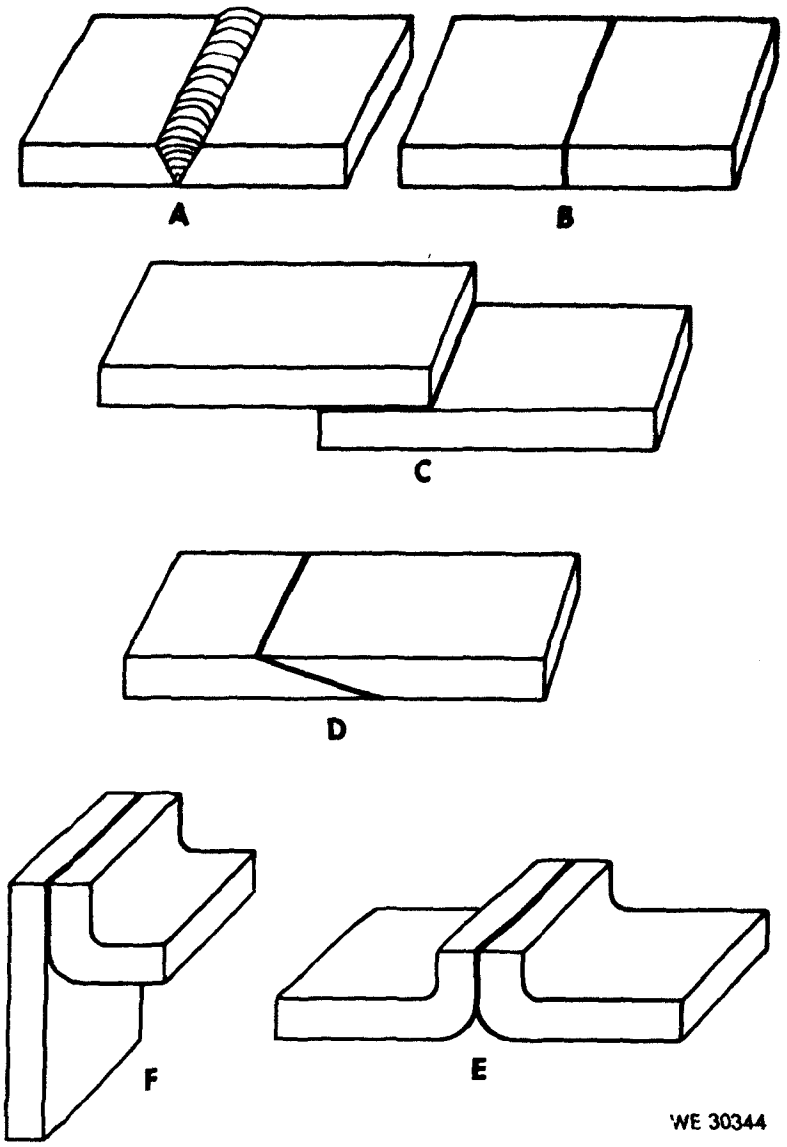

Figure 6–10. Joint designs.

6–27. Braze Welding

a. *General.*

(1) Braze welding is similar to the brazing and soldering processes in that a filler rod with a melting point lower than that of the base metal, but above 800 deg F., is used. A groove, fillet, plug or slot weld is made and the filler metal is not disturbed by capillary attractions. In braze welding a nonferrous filler rod, strip, or wire is used for repairing or joining cast iron, malleable iron, wrought iron, steel, copper, nickel, and high melting point brasses and bronzes. Some of these brasses and bronzes, however, melt at a temperature so near to that of the welding rod that fusion welding rather than braze welding, is required. In the past this process has been referred to as

brazing or bronze welding. For definition of brazing see paragraph 3–6.

(2) In braze welding with the oxy-acetylene torch the base metal parts are heated to the temperatures required for the melting and free flowing of the welding alloy. Care should be taken not to overheat the base metal. One method for determining the correct temperature is to touch the joint with the welding rod, strip, or wire as the heating progresses. As soon as the temperature of the metal is high enough to melt the alloy, the rod, strip, or wire is brought under the flame to perform the operation.

(3) Repairs on high carbon and tool steels should be made by braze welding only in cases of an emergency, and where the lower strength and hardness of the filler metal are acceptable. Braze welding should never be used where the part is subjected to temperatures higher than 650 deg F. At temperatures ranging from 500 to 650 deg F., the strength of the filler metal is greatly impaired.

b. *Material and Equipment Required.*

(1) Besides a welding torch with a proper tip size, a filler metal of the required composition and a proper flux are important to the success of any braze welding operations.

(2) The choice of the filler metal depends on the types of metals to be joined. Copper-silicon (silicon-bronze) rods are used for welding copper and copper alloys and for welding plain or zinc-coated thin steel. Copper-tin (Phosphor-bronze) rods are used for welding similar copper alloys and for braze welding steel and cast iron. Other compositions are used for welding and brazing specific metals.

(3) Fluxes are used to prevent oxidation of the filler metal and the base metal surface, and to promote the free flowing of the filler metal. They should be chemically active and fluid at the welding temperature. After the joint members have been fitted and thoroughly cleaned an even coating of flux should be brushed over the adjacent surface of the joint, taking care that no spots are left uncovered. The proper flux is a good temperature indicator for torch welding because the joint should be heated until the flux remains fluid when the torch flame is momentarily removed.

c. *Joint Design.* The V groove joint (A, fig. 6–10) is the proper design used for braze welding with copper base or bronze welding rods, but it is not suitable for brazed joints where the filler metal is distributed in the joint by capillary attraction.

d. *Preparation of Joint.* The edges to be joined should be thoroughly cleaned of oxides by grinding or brushing. Surface dirt and grease should be washed away for a distance not less than 1 inch from each side of the joint with a grease solvent such as dry cleaning solvent or mineral spirits paint thinner. In braze welding galvanized coatings need not be removed. A flux paste applied for a distance of 2 inches on each side of the joint will prevent the galvanized coating from peeling or burning off. Parts to be joined should be alined correctly and tack welded or clamped in the proper position.

c. *Flame Adjustment.* The flame should be slightly oxidizing, which will permit better bonding between the bronze and the base metal and suppress zinc fumes. The proper oxidizing flame is obtained by adjusting to neutral and then closing the acetylene valve slowly until the inner cone has been reduced in length by about one tenth. In some cases the proper oxidizing flame is obtained after the operation is started by adjusting the acetylene valve until fuming ceases.

f. *Tinning.*

(1) Tinning is the spreading out of a thin layer of molten fluxed weld metal ahead of the main deposit to form a coating which provides a strong bond between the base metal and bronze. This tinning is due to the action of the flame and the flux. It will take place only when the base metal is at the right temperature. If the base metal is not hot enough the bronze will not flow; if too hot the molten bronze will boil, fume excessively, and will form droplets on the edges of the base metal. Proper tinning will be similar in appearance to water spreading over a clean moist surface, whereas improper tinning has the appearance of water on a greasy surface.

(2) A liberal amount of flux should be used, especially when the speed of welding is rapid. This can be done by heating several inches of the end of the bronze rod and dipping or rolling it in a container of flux. Where

braze welding progresses more slowly, as in the repair of heavy castings, it is sufficient to dip the hot end of the rod into the flux, and add to the puddle as required.

g. *Braze Welding Technique.*

(1) Begin welding by heating a small area just enough to cause the metal from the fluxed filler rod to spread out evenly and produce a tinning coat a short distance ahead of the main deposit. The inner cone of the slightly oxidizing flame should be kept 1/8-inch away from the surface of the metal. Usually the flame is pointed ahead of the completed bead at an angle of about 45 deg, with the puddle under and slightly behind the flame. The torch angle may vary, depending on the position of the joint (overhead or vertical) and the thickness of the bead being made. The motion of the rod and torch will depend on the size of the puddle being carried, the nature of the joint or surfaces welded, and the speed of welding.

(2) When braze welding heavy sections it may be necessary to deposit the filler metal in layers. In such cases the base metal must be thoroughly tinned when the first layer is deposited and care should be taken to insure good fusion between layers.

(3) Never reheat the weld after it has solidified without adding more fluxed filler metal. Otherwise the deposited filler metal becomes porous and of low strength. Bronze welding should be made in one pass or layer whenever possible.

(4) Bronze welding, especially on castings, must be protected from drafts to permit slow cooling. This can be done by covering the finished piece with asbestos paper, or by burying it in a box of lime, asbestos powder, or fine sand. No stress should be put on a welded joint until it has cooled completely, because bronze has a relatively low strength when hot.

(5) The finished bead should be cleaned with a wire brush to remove any excess flux from the surface of the metal.

6–28. Brass and Bronze Welding

a. *General.* The welding of brasses and bronzes differs from braze welding and brazing in that the welding process requires the melting of both base metal edges and the welding rod, whereas in braze welding and brazing only the filler rod is melted.

b. *Low Brasses (Copper 80 to 95 Percent, Zinc 5 to 20 Percent).* Brasses of this type can be welded readily in all positions by the oxy-acetylene process. Weldings rods of the same composition as the base metal are not available, and for this reason 1½ percent silicon rods are recommended as filler metal. Their weldability differs from copper in that the welding point is progressively reduced as zinc is added; the thermal and electrical conductivities are also reduced though they are still high enough to give trouble; the low vaporization point of zinc is prone to give trouble in arc welding. Fluxes are required, preheating and supplementary heating may also be necessary.

c. *High Brasses (Copper 55 to 80 Percent, Zinc 20 to 45 Percent.* These brasses can be readily welded in all positions by the oxy-acetylene process. Welding rods of substantially the same analysis are available. The welding technique is the same as that required for copper welding, including supplementary heating. Fluxes are required. These brasses should not be welded with the direct action of the arc as the zinc vapories so rapidly as to give trouble in such operations. Resistance spot and seam welding can be accomplished with some difficulties.

d. *Aluminum Bronze.* The aluminum bronzes are seldom welded by the oxy-acetylene process because of the difficulty in handling the aluminum oxide with the fluxes designed for the brasses. Some success has been reported by using welding rods of the same analysis as the base metal and a bronze welding flux, to which has been added a small amount of aluminum welding flux to control the aluminum oxide. Aluminum bronze welding rods work better as flux coated metal arc electrodes. When deposited with the arc, fusion of the rod and base metal takes place very quickly in an atmosphere low in water vapor and free oxygen. The metal quickly run together in the arc weld pool, resulting in a strong, sound weld. However, the hot metal oxidizes immediately behind the arc's progress making it necessary, when more than one pass is desired, to cool the first pass and grind it clean before a second pass is started.

e. *Copper Beryllium Alloys.* The welding of these alloys by the oxy-acetylene process is very difficult because of the formation of beryllium oxide. However, with the carbon arc it is possible to make strong, sound welds with the bare beryllium copper welding rods.

f. *Copper Nickel Alloys.* From a welding standpoint these alloys are similar to monel metal, and oxy-acetylene welding can be used successfully. The flame used should be slightly reducing, the rod must be of the same composition as the base metal, and a sufficient deoxidizer (manganese or silicon) is needed to protect the metal during welding. Flux specifically designed for monel and these alloys must be used to prevent the formation of nickel oxide and to avoid porosity. No flux is needed with the metal arc electrodes. Limited melting of the base metal is desirable to facilitate rapid solidification of the molten metal. Once started the weld should be completed without stopping, and the rod should be kept within the protective envelope of the flame.

g. *Nickel Silver.* Oxy-acetylene welding is the preferred method for joining alloys of this type. The filler metal is a high zinc bronze which contains more than 10 percent nickel. A suitable flux must be used to dissolve the nickel oxide and avoid porosity.

h. *Phosphor Bronze.* Oxy-acetylene welding is not commonly used for welding the copper-tin alloys because the heating and slow cooling causes contraction, with consequent cracking and porosity in this hot-short material.

Note. **Hot short is defined as a marked loss in strength at high temperatures.**

However, if the oxy-acetylene process must be used the welding rod should be grade E (1.0 to 1.5 percent tin) with a good flux of the type used in braze welding. A neutral flame is preferred unless there is an appreciable amount of lead present. In this case oxidizing flame will be helpful in producing a sound weld. A narrow heat zone will promote quick solidification and a sound weld.

i. *Silicon Bronze.* Copper-silicon alloys are successfully welded by the oxy-acetylene process. The filler metal should be of the same composition as the base metal, and a flux with a high boric acid content should be used. A weld pool as small as is consistent with the welding operation should be maintained to facilitate rapid solidification. This will keep the grain size small and avoid contraction strains during the hot-short temperature range. A slightly oxidizing flame will keep the molten metal clean in oxy-acetylene welding of these alloys. This flame is helpful when welding in the vertical or overhead positions.

6–29. Magnesium Welding

a. *General.* Gas welding of magnesium is usually used only in emergency repair work. A broken or cracked part can be restored and placed back into use but such repair is made only as a temporary measure until a replacement part can be obtained. Gas welding has been almost completely supplanted by inert gas arc welding. It does not require the corrosion producing flux needed for gas welding.

b. *Base Metal Preparation.* The base metal preparation is the same as that for arc welding and is listed in paragraph 7–23.

c. *Welding Fluxes.*

(1) The purpose of the flux is to protect the molten metal from excessive oxidation and to remove any oxidation products from the surfaces. It also promotes proper fluidity of the weld and wetting action between the weld metal and the base metal. Most of the fluxes do not react with magnesium in the fused state but do react strongly after cooling by taking on moisture. Therefore, all traces of flux and flux residues must be removed immediately after welding.

(2) The fluxes are usually supplied as dry powder in hermetically sealed bottles. They are prepared for use by mixing with water to form a paste. A good paste consistency can be produced with approximately ½ pint of water to one pound of powder. Do not prepare any more than 1 day supply of flux paste, and it should be kept in a covered glass container when not in use. The flux paste can be applied to the work and welding rod with a small bristle brush or when possible by dipping.

(3) The presence of a large amount of sodium in the welding flux gives an intense glare to the welding flame. Operators should

wear proper protective attire. Blue lenses are preferred in the goggles.

d. *Welding Rods.* The rods should be approximately the same composition as the base metal. When castings of forged fittings are welded to a sheet it is important that the rod has the same composition as the sheet. If necessary, strips of the base metal may be used instead of regular welding rods. So that the correct welding rod may be readily identified they have the following characteristics: Dowmetal F is blue; Dowmetal J or J–1 is yellow, green and aluminum, Dowmetal M is yellow; Maylo AM 35 is round; Mazlo AM 52S and AM 53S are square; Mazlo AM 57S is triangular; Mazlo AM 88S is oval. Like all magnesium alloys, the welding rods are supplied with a corrosion resistant coating which must be removed before using. After a welding operation all traces of flux should be removed from the unused portion of the rod.

e. *Welding Technique.*

(1) A liberal coating of flux should be applied to both sides of the weld seam and onto the welding rod. The torch should be adjusted to a neutral or slightly reducing flame with a ½-inch inner cone or with a cone that "feathers" slightly when the oxygen pressure is lowered.

(2) Tack welds should be spaced at ½ to 2½-inch intervals along the seam. In making a tack weld, the weld area should be heated gently with the outer flame of the torch to dry and fuse the flux. Do not use a harsh flame which may blow the flux away. When the flux is liquified the inner cone of the flame is brought from 1/16 to 1/8-inch from the work and a drop of metal is added from the rod. More flux will be required to finish the weld.

(3) The weld should start in the same manner as the tack welds and should progress in a straight line at a uniform rate of speed with the torch held at a 45 deg angle to the work. The torch should move steadily while the rod is intermittenly dipped into the weld puddle. If a decrease of heat is necessary it is advisable to decrease the angle of the torch and increase the speed rather than to lift the torch from the work. Too hot a flame or too slow a speed increases the activity and viscosity of the flux and causes pitting. If a weld is interrupted the end of the weld should be refluxed and the flame directed slightly ahead of the weld before restarting the bead. All tack and overlapping welds should be remelted to float away any flux inclusions. To avoid cracking at the start, the weld should be started away from the edge.

(4) Magnesium castings to be welded should be preheated with a troch or in a furnace before welding is started. The entire casting should be brought up to a preheat temperature of about 650 deg F. This temperature can be approximated with blue carpenter's chalk which will turn white at about 600 deg F. After welding, the casting should be stress relieved in a furnace for 1 hour at 500 deg F. If no furnace is available a gas flame should be played over the entire casting until the stress relieving temperature is reached. The casting should then be allowed to cool slowly, away from all drafts.

f. *Cleaining After Gas Welding.* All traces of flux must be removed from parts immediately after the completion of gas welds; first by scrubbing with a stiff bristle brush and hot water, and then immersing for 1 to 2 minutes in a chrome pickle solution consisting of 1½ pounds sodium dichromate and 1½ pints nitric acid with enough water to make a gallon. The temperature of the solution should be 70 to 90 deg F. After chrome pickling the parts should be washed in cold running water and then boiled for 2 hours in a solution of 8 ounces of sodium dichromate in 1 gallon of water. Parts should then be rinsed and dried.

Warning. **Precleaning and postcleaning acids used in magnesium welding are highly toxic and corrosive. Goggles, rubber gloves, and rubber aprons should be worn when handling the acids and solutions. Do not inhale fumes. When spilled on the body or clothing wash immediately with large quantities of cold water, followed by a solution of bicarbonate of soda in water. Do not pour water into acid when preparing solution.**

6–30. Magnesium Brazing

a. *General.*

(1) Furnace, torch, and flux-dip brazing can be used. Furnace and torch brazing is generally limited to MIA alloy, whereas flux-dip

brazing can be used on AX10, AX31B, K1A, M1A, and ZE10A alloys (par. 2–8a).

(2) Brazed joints are designed to permit the flux to be displaced from the joint by the brazing filler metal as it flows into the joint. The best joints for brazing are butt and lap. Suitable clearances between parts are essential if proper capillary filling action is to take place. The suggested clearance is from 0.004 to 0.010-inch. In furnace brazing beryllium is added to the brazing alloy to avoid ignition of the magnesium.

b. *Equipment and Materials.*

(1) Furnaces and flux pots are equipped with automatic controls to maintain the required temperature within ±5 deg F. In torch brazing the standard type gas welding torch is used.

(2) Chloride base fluxes similar to those used in gas welding are suitable. A special flux is required for furnace brazing. Fluxes with water or alcohol vehicles are unsuitable for furnace brazing.

(3) A magnesium base alloy filler metal is used so that the characteristics of the brazed joint are similar to a welded joint and offer good resistance against corrosion.

c. *Base Metal Preparation.*

(1) Parts to be brazed must be thoroughly cleaned and free of such substances as oil, grease, dirt, and surface films such as chromates and oxides.

(2) Mechanical cleaning can be accomplished by sanding with aluminum oxide cloth. Chemical cleaning can be accomplished by vapor degreasing, alkaline cleaning, or acid cleaning as required by the surface to be joined. An acid solution consisting of 24 ounces of chromic acid (CR O_3), 40 ounces of sodium nitrate (N_a NO_3), and ⅛ ounce of calcium or magnesium fluoride with enough water to make 1 gallon is suitable for this purpose. Parts are immersed in the solution at 70 to 90 deg F., for 2 minutes and then rinsed thoroughly, first in cold water and then in hot water.

Warning. **These acids are highly toxic and corrosive. Goggles, rubber gloves, and rubber aprons should be worn when handling the acids and solutions. Do not inhale fumes. When spilled on body or clothing, wash immediately with large quantities of cold water, followed by a solution of bicarbonate of soda in water. Do not pour water into acid when preparing solutions.**

d. *Brazing Procedure.*

(1) *TORCH.* The equipment and techniques used for gas welding are used in brazing magnesium. Either a nuetral oxy-acetylene or a natural-gas-air flame may be used. In some operations the natural gas is preferred, because of its soft flame with less danger of overheating. The filler metal is placed on the joint and fluxed before melting, or it is added by means of a flux coated filler rod. If a rod is used the flame is directed at the base metal, and the rod is dipped intermittently into the molten flux puddle.

(2) *FURNACE* The parts to be brazed are assembled with filler metal placed in or around the joints. A flux, preferably in powder form, is put on the joints and the parts are placed in a furnace, which is at brazing temperature. The brazing time is 2 or 3 minutes depending on the thickness of the parts being brazed. The parts are air cooled after removal from the furnace.

(3) *FLUX DIP.* The joints are provided with slots or recessed grooves for the filler metal, to prevent its being washed into the flux bath. The parts are then assembled in a fixture, thoroughly dried, and then immersed for 30 to 45 seconds in a molten bath of flux.

e. *Cleaning after Brazing.* Removal of all traces of flux is essential because the flux residues are hygroscopic, and will cause a pitting type of corrosion. The parts should be cleaned in the same manner as for gas welded parts (par. 6–29f).

6–31. Magnesium Soldering

a. *General.* Magnesium and magnesium alloys can be soldered but soldering is usually limited to the filling of small surface defects in castings, small dents in sheet metal, and other minor treatments of surfaces on which a smooth paint finish is desired. Soldering should not be used in stress areas or to join magnesium to other metals because of low strengths and brittle joints obtained. There is a marked difference in solution potentials between solders and magnesium, making sol-

dered magnesium joints unsatisfactory in moist or corrosive atmospheres.

b. *Soldering Procedure.*

(1) Magnesium alloy surfaces must be cleaned to a bright metallic luster before soldering to insure good fusing between the solder and magnesium. This cleaning can be accomplished by filing, wire brushing, or with aluminum oxide cloth.

(2) The area to be soldered should be heated to just above the melting point of the solder. A small quantity of solder is applied and rubbed vigorously over the area to obtain a uniform tinned surface. A stiff wire brush or sharp steel tool assists in establishing a bond. After the bond is established filler metal may be added to the extent desired. Flux is not necessary.

6–32. Nickel Welding

a. *General.* Nickel steels can, for the most part, be welded with the same processes used for carbon steel. Oxy-acetylene welding is preferred to metal arc in some cases. This is true in welding on thin wall pipe or tubing, and thin gauge strip where the arc would penetrate the material. It is also preferred on some higher carbon steels because of the lower weld hardening results.

b. *Joint Design.* Corner and lap joints are satisfactory where high stresses are not to be encountered. Butt joints are used in equipment such as pressure vessels. Beveling is not required for butt joints in material 0.050 to 0.125-inch thick. In thicker material a bevel angle of 37½ deg should be made. For sheets 0.43-inch and thinner, both butt and corner joints are used. Corner joints are used for thicknesses of 0.037-inch and heavier.

c. *Fluxes.* Flux is not required when welding nickel. However, it is required for Monel and Inconel. The fluxes are used preferrably in the form of a thin paste made by mixing the dry flux in water for Monel and in a thin solution of shellac and alcohol (approximately 1-pound of shellac to 1-gallon of alcohol) for Inconel. For welding K Monel, a flux composed of two parts of Inconnel flux and one part of lithium fluoride should be used. The flux is applied with a small brush or swab on both sides of the seam, top and bottom, and on the welding rod.

d. *Welding Rods.* Welding rods of the same composition as the alloy being welded are available. Rods of the same composition are necessary to insure uniform corrosion resistance without galvanic effects. In some cases a special silicon monel rod is used for welding nickel.

e. *Welding Technique.*

(1) All oil, dirt, and residues must be removed from the area of the weld by machining, sandblasting, grinding, rubbing with abrasive cloth, or chemically by pickling.

(2) A slightly reducing flame should be used. There is a slight pressure fluctuation in many oxygen and acetylene regulators and the amount of excess acetylene in the flame should be only enough to counteract this fluctuation and prevent the flame from becoming oxidizing in nature.

(3) The tip should be the same size or one size larger than recommended by torch manufacturers for similar thicknesses of steel. The tip should be large enough to permit the use of a soft flame. A high velocity or harsh flame is undesirable.

(4) The parts to be welded should be held firmly in place with jigs or clamps to prevent distortion.

(5) Once started, welding should be continued along the seam without removing the torch from the work. The end of the welding rod should be kept well within the protecting flame envelope to prevent oxidation of the heated rod. The luminous cone tip of the flame should contact the surface of the molten pool in order to obtain concentrated heat. This will also prevent oxidation of the molten metal. The pool should be kept quiet and not puddled or boiled. If surface oxides or slag form on the surface of the molten metal the rod should be melted into the weld under this surface film.

6–33. Nickel Soldering

a. Soft soldering can be used for joining nickel and high nickel alloys only on sheet metal not more than 0.062-inch thick and only for those applications where the solder is not readily corroded. Soft solder is inherently of

low strength. Joint strength must be obtained by rivets, locked seams, or spot welding, with soft solder acting as a sealing medium.

b. The 50–50 and 60–40 percent tin-lead solders are preferred for joining metals of this type.

c. The flux used for nickel and monel is a zinc saturated hydrochloric (muriatic) acid solution. Inconel requires a stronger flux because of its chromium oxide film. All flux and flux residues must be removed from the metal after the soldering operation is completed.

d. Surfaces of metal parts to be soft soldered must be free from dirt, surface oxide or other discoloration. Where possible the surfaces to be joined should be "tinned" with solder to insure complete bonding during the final soldering operation.

6–34. Lead Welding

a. *General.* The welding of lead is similar to welding of other metals except that no flux is required and processes other than gas welding are not in general use.

b. *Gases Used.* Three combinations of gases are commonly used for lead welding. These are oxy-acetylene, oxy-hydrogen, and oxy-natural. The oxy-acetylene and oxy-hydrogen are satisfactory for all positions. The oxy-natural is not used for overhead welding. A low gas pressure ranging from 1½ to 5 psi is generally used, depending on the type of weld to be made.

c. *Torch.* The welding torch is relatively small in size, with the oxygen and flammable gas valves located at the forward end of the handle so that they may be conveniently adjusted by the thumb of the holding hand. Torch tips range in drill size from 78 to 68. The smaller tips are for 6-pound lead (i.e. 6 pounds per sq ft), the larger tips for heavier lead.

d. *Welding Rods.* The filler rods should be of the same composition as the lead to be welded. They range in size from ⅛ to ¾ inch in diameter. The smaller sizes are used for lightweight lead and the larger sizes for heavier lead.

e. *Types of Joints.* Butt, lap, and edge joints are the types most commonly used in lead welding. Either the butt or lap joint is used on flat position welding. On vertical and overhead position welding the lap joint is used. The edge or flange joint is used only under special conditions.

f. *Welding Technique.*

(1) The flame must be neutral. A reducing flame will soot on the joint and an oxidizing flame will produce oxides on the molten lead and impair coalescence. A soft, bushy flame is most desirable for welding in a horizontal position. A more pointed flame is generally used in the vertical and overhead positions.

(2) The flow of molen lead is controlled by the flame, which is usually handled with a semicircular of V-shaped motion. This accounts for the herringbone appearance of the lead weld. The direction of the weld depends on the type of joint and the position of the weld. The welding of vertical position lap joints is started at the bottom of the joint. Welding rod is not generally used. In flat position welding lap joints are preferred. The torch is moved in a semicircular path toward the lap and then away. Filler metal is used but not on the first pass. Overhead position welding is very difficult. For that position a lap joint and a flame as sharp as possible are used. The molten beads must be small and the welding operation must be completed quickly.

6–35. White Metal Welding

a. *General.* White metal is divided into three general classes according to the basic composition, i.e. zinc, aluminum, and magnesium. Most of the castings made are of the zinc alloy type. This alloy has a melting point of 725 deg F.

b. *Flame Adjustment.* The welding flame should be adjusted to carburizing but no soot should be deposited on the joint. The oxy-acetylene flame is much hotter than necessary and it is important to select a very small tip.

c. *Welding Rod.* The welding rod may be of pure zinc or a die-casting alloy of the same type as that to be welded. Metal flux (50 percent zinc chloride and 50 percent ammonium chloride) can be used but it is not mandatory.

d. *Welding Technique.* The casting should be heated until the metal begins to flow. Then

turn the flame parallel to the surface allowing the side of the flame to keep the metal soft while heating the welding rod to the same temperature. With both the base metal and the welding rod at the same temperature the rod should be applied to and thoroughly fused with the walls of the joint. The rod should be manipulated so as to break up surface oxides.

6–36. Bronze Surfacing

a. *General.* Bronze surfacing is used for building up surfaces that have been worn down by sliding friction or other types of wear where low heat conditions prevail. This type of repair does not involve the joining of metal parts but is merely the addition of bronze metal to a part in order that it may be restored to its original size and shape. After bronze surfacing the piece is machined to the desired finished dimensions. Cast iron, carbon and alloy steels, wrought iron, malleable iron, monel metal, and nickel and copper-base alloys are satisfactorily built up by this process. This process is used to repair worn surfaces of rocker-arm rollers, lever bearings, gear teeth, shafts, spindle, yokes, pins, and clevises. Small bushings can be renewed by filling up the hole in the cast iron with bronze and thin drill them out to the required size.

b. *Preparation of Surface.* The surface to be rebuilt must be ground down or machined to remove all scale, dirt, or other foreign matter. If possible, cast iron surfaces should be chipped or ground to clean them because machining will smear the surface with graphite particles present in cast iron, and make the obtaining of a good bond to the bronze difficult. If the cast iron surface must be machined, an oxidizing flame should be passed over the surface to burn off the surplus graphite and carbon before the bronze coating is applied. Hollow piston-heads or castings should be vented by removing the core plugs, or by drilling a hole into the cavities. This will prevent trapped gases from being expanded by the welding heat and cracking of the metal.

c. *Flame Adjustment.* A neutral or slightly oxidizing flame is recommended. An excess acetylene flame will cause porosity, fuming, and adhesion.

d. *Fluxes.* A suitable brazing flux should be used to obtain good tinning and adhesion of the bronze to the base metal.

e. *Welding Rods.* The bronze rod selected should fulfill the requirements for hardness or ductility needed for the particular application.

f. *Application.* The bronze surfacing metal is usually applied by mechanical means with two or more flames and with a straight line or an oscillating motion. A layer of bronze 1/16 to ¼-inch thick is usually sufficient. It should be slowly cooled to room temperature and then machined to the desired dimensions.

6–37. Soldering

a. *General.* Soldering consists in using fusible alloys for joining metals, the kind of solder used depends on the metals to be joined. Hard solders are called spelter and hard soldering is called brazing. This process gives greater strength and will stand more heat than soft solder.

b. *Soft Soldering.* This process is used for joining most common metals with an alloy that melts at a temperature below that of the base metal and always below 800 deg F. In many respects this operation is similar to brazing, in that the base metal is not melted but is merely tinned on the surface by the solder filler metal. For its strength the soldered joint depends on the penetration of the solder into the pores of the base metal surface and the consequent formation of a base metal solder alloy, together with the mechanical bond between the parts. Soft solders are used where air or water tight joints, which are not exposed to high temperatures, are required.

c. *Joint Preparation.* The parts to be soldered should be free of all oxide, scale, oil, and dirt to insure sound joints. Cleaning may be pickling in caustic or acid solutions, filing, scraping, sandblasting, or other suitable means.

d. *Flux.* All soldering operations require a flux in order to obtain a complete bond and full strength at the joints. Fluxes clean the joint area, prevent oxidation, and increase the wetting power of the solder by decreasing its surface tension. The following types of soft soldering fluxes are in common use: rosin, or

rosin and glycerine, which are used on clean joints to prevent the formation of oxides during the soldering operations; zinc chloride and ammonium chloride may be used on tarnished surfaces to permit good tinning; or a solution of zinc cut in hydrochloric (muriatic) acid, which is commonly used by tin workers as a flux.

e. *Application.* Soft solder joints may be made by using gas flames, by wiping, by sweating the joints, or by dipping in solder baths. Dipping is particularly applicable to the repair of radiator cores. Electrical connections and sheet metal are soldered with a soldering iron gun. Wiping is a method used for joining lead pipe and also the lead jacket of underground and other lead covered cables. Sweated joints may be made by applying a mixture of solder powder and paste flux to the joints and then heating the part until this solder mixture liquifies and flows into the joints; or by tinning mating surfaces of members to be joined and applying heat to complete the joint.

6–38. Silver (Brazing) Soldering

a. Silver brazing, frequently called "silver soldering," is a low temperature brazing process with rods having melting points ranging from 1145 to 1650 deg F. This is considerably

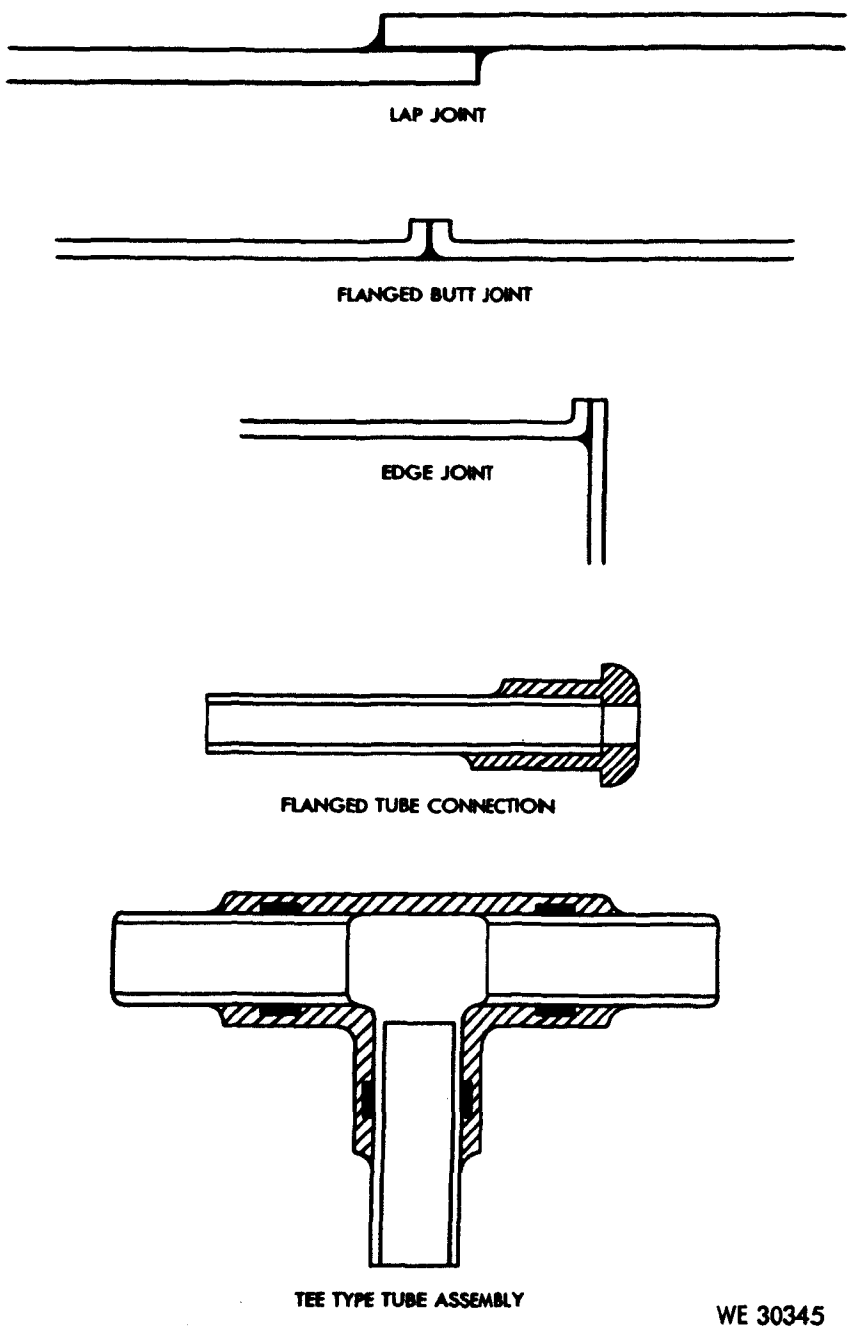

Figure 6–11. Silver brazing joints.

lower than that of the copper alloy brazing filler metals. The strength of a joint made by this process is dependent on a thin film of silver brazing filler metal.

b. Silver brazing filler metals are composed of silver with varying percentages of copper, nickel, tin, and zinc. They are used for joining all ferrous and nonferrous metals except aluminum, magnesium, and other metals which have too low a melting point.

c. It is essential that the joints be free of oxides, scale, grease, dirt, or other foreign matter. The surfaces other than cadmium plating, can be easily cleaned mechanically by wire brushing, or an abrasive cloth; chemically by acid pickling or other means. Extreme care must be used to grind all cadmium surfaces to the base metals since cadmium oxide formed by overheating and melting of the silver brazing alloys is highly toxic (See par. 4–4b).

d. Flux is generally required. The melting point of the flux must be lower than the melting point of the silver brazing filler metal so that it will clean the base metal and properly flux the molten metal. A satisfactory flux should be applied by means of a brush to the parts to be joined and also to the silver brazing filler metal rod.

e. When silver brazing by the oxy-acetylene process, a slightly reducing flame is desirable. The outer envelope of the flame, not the inner cone, should be applied to the work. The cone of the flame is too hot for this purpose. Joint clearances should be between 0.002 and 0.005-inch for best filler metal distribution. A thin film or filler metal in a joint is stronger and more effective, a fillet build up around the joint will increase its strength. Some joints which can be used are shown in figure 6–11.

f. The base metal should be heated until the flux starts to melt along the line of the joint; the filler metal is not subjected to the flame but is applied to the heated area of the base metal just long enough to flow the filler metal completely into the joint. If one of the parts to be joined is heavier than the other, the heavier part should receive the most heat. Also, parts having high heat conductivity should receive more heat.

Section IV. CUTTING AND OTHER USES OF OXY-ACETYLENE FLAME

6–39. General

a. If iron or steel is heated to its kindling temperature (not less than 1,600 deg F.), and then brought in contact with oxygen it burns or oxidizes very rapidly. The reaction of oxygen with the iron or steel forms iron oxide ($Fe_3 O_4$) and gives off considerable heat. This heat is sufficient to melt the oxide and some of the base metal, and consequently, more of the metal is exposed to the oxygen stream. This reaction of oxygen and iron is used in the oxy-acetylene cutting process. A stream of oxygen is impinged on the metal surface after it has been heated to the kindling temperature. The hot metal reacts with oxygen, generating more heat and melting. The molten metal and oxide are swept away by the rapidly moving stream of oxygen. The oxidation reaction continues and furnishes heat for melting another lay of metal. The cut progresses in this manner. The principle of the cutting process is shown in figure 6–12.

b. Theoretically, the heat created by the burning iron would be sufficient to heat adjacent iron red hot, so that once started the cut could be continued indefinitely with oxygen only, as is done with the oxygen lance. In practice, however, excessive heat absorption at the surface caused by dirt, scale, or other substances, makes it necessary to keep the preheating flames of the torch burning throughout the operation.

6–40. Cutting Steel and Cast Iron

a. *General.* Plain carbon steels with a content not exceeding 0.25 percent can be cut without special precautions other than those required to obtain cuts of good quality. Certain steel alloys develop high resistance to the action of the cutting oxygen, making it difficult and sometimes impossible to propagate

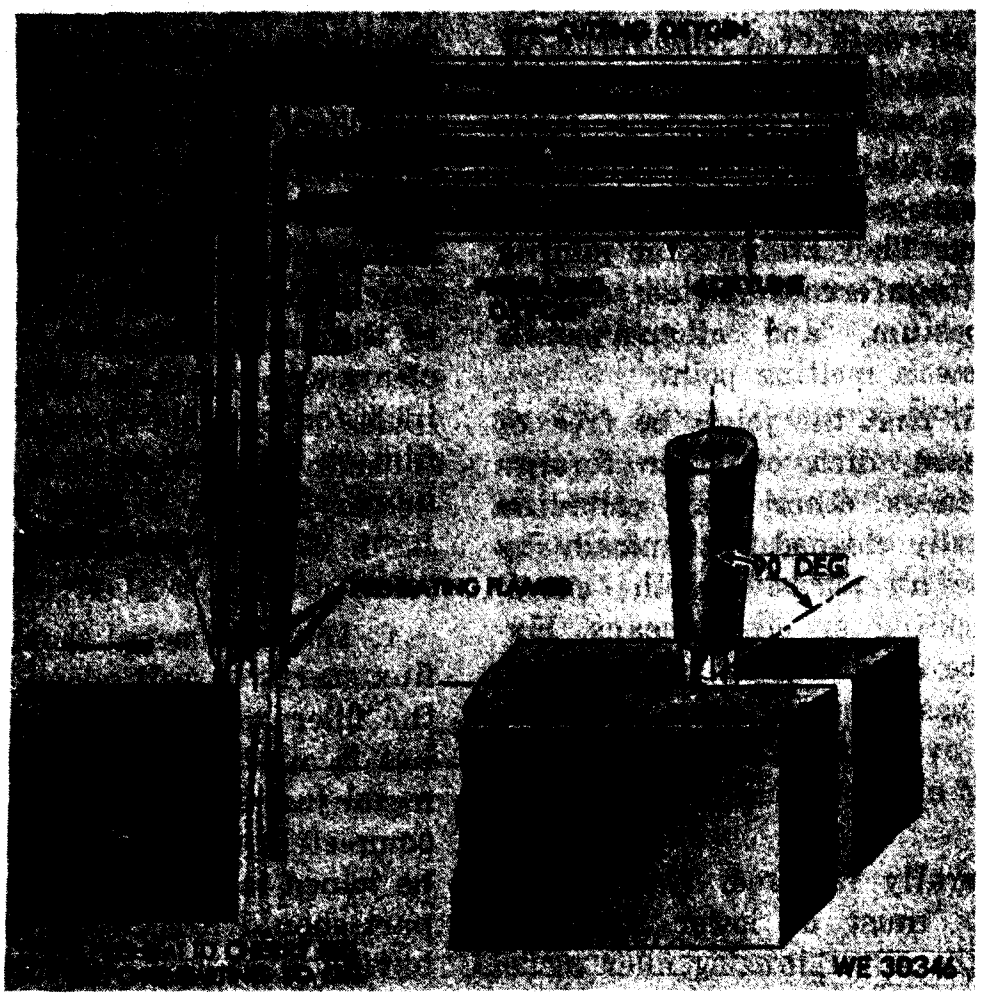

Figure 6-12. Starting a cut and cutting with a cutting torch.

the cut without the use of special techniques. These techniques are described briefly in b and c below:

b. *High Carbon Steels.* The action of the cutting torch on these metals is similar to a flame hardening procedure, in that the metal adjacent to the cutting area is hardened by being heated above its critical temperature by the torch and quenched by the adjacent mass of cold metal. This condition can be minimized or overcome by preheating the part from 500 to 600 deg F., before the cut is made.

c. *Waster Plate on Alloy Steel.* The cutting action on an alloy steel difficult to cut can be improved by clamping a mild steel "waster plate" tightly to the upper surface and cutting through both thicknesses. This waster plate method will cause a noticeable improvement in the cutting action, because the molten steel dilutes or reduces the alloying content of the base metal.

d. *Chromium and Stainless Steels.* These and other alloy steels that previously could only be cut by a melting action can now be cut by rapid oxidation through the introduction of iron powder or a special nonmetallic powdered flux into the cutting oxygen stream. The iron powder oxidizes quickly and liberates a large quantity of heat. This high heat melts the refractory oxides which normally protect the alloy steel from the action of oxygen. These molten oxides are flushed from the cutting face by the oxygen blast and the cutting oxygen is enabled to continue its reaction with the iron powder and cut its way through the steel plates. The nonmetallic flux, introduced into the cutting oxygen stream, combines chemically with the refractory oxides and produces a slag of a lower melting point, which is washed or eroded out of the cut exposing the steel to the action of the cutting oxygen.

e. *Cast Iron.* Cast iron melts at a temperature lower than its oxides, and, therefore, in the cutting operation the iron tends to melt rather

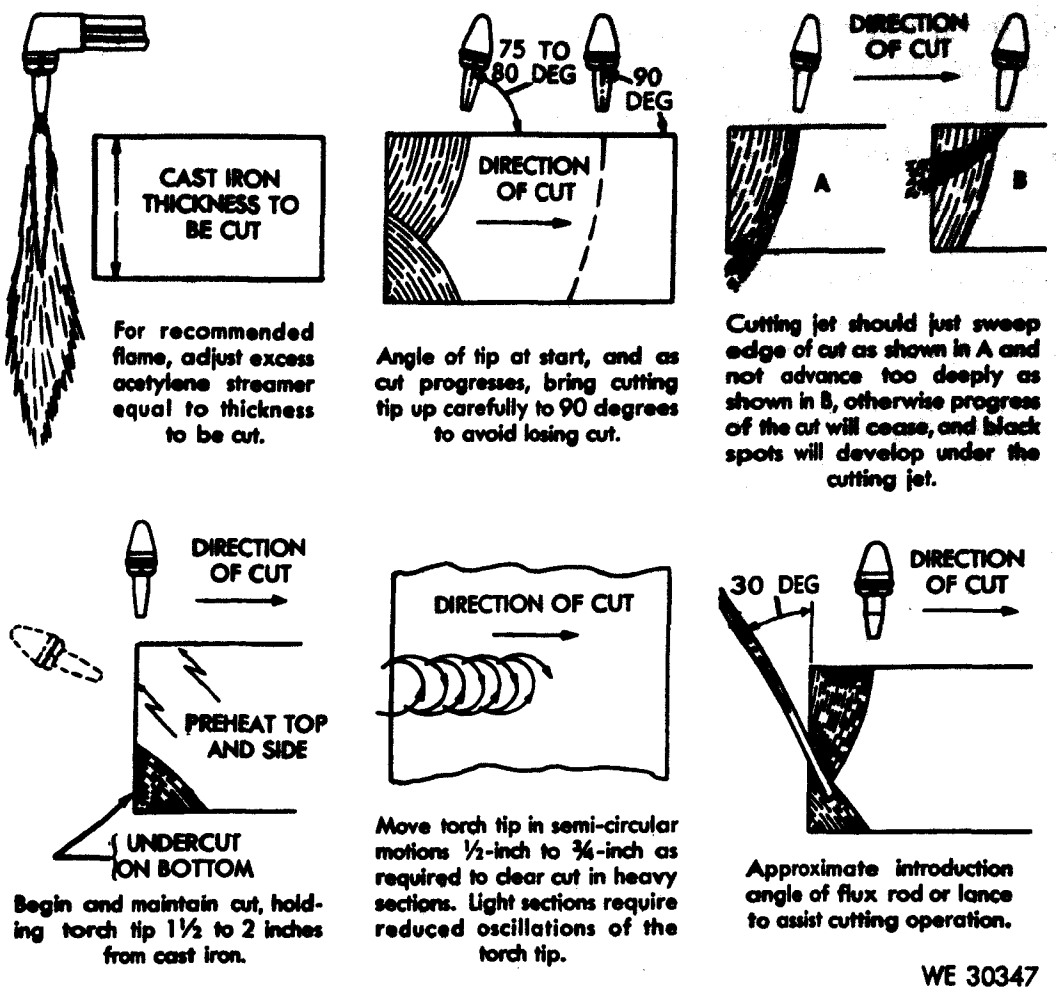
CAST IRON THICKNESS TO BE CUT
For recommended flame, adjust excess acetylene streamer equal to thickness to be cut.
75 TO 80 DEG
90 DEG
DIRECTION OF CUT
Angle of tip at start, and as cut progresses, bring cutting tip up carefully to 90 degrees to avoid losing cut.
DIRECTION OF CUT
A
B
Cutting jet should just sweep edge of cut as shown in A and not advance too deeply as shown in B, otherwise progress of the cut will cease, and black spots will develop under the cutting jet.
DIRECTION OF CUT
PREHEAT TOP AND SIDE
UNDERCUT ON BOTTOM
Begin and maintain cut, holding torch tip 1½ to 2 inches from cast iron.
DIRECTION OF CUT
Move torch tip in semi-circular motions ½-inch to ¾-inch as required to clear cut in heavy sections. Light sections require reduced oscillations of the torch tip.
30 DEG
DIRECTION OF CUT
Approximate introduction angle of flux rod or lance to assist cutting operation.
WE 30347

Figure 6–13. Procedure for oxy-acetylene cutting of cast iron.

than to oxidize. For this reason the oxygen jet is used to wash out and erode the molten metal when cast iron is being cut. To make this action effective the cast iron must be preheated to a high temperature and much heat must be liberated deep in the cut. This is effected by adjusting the preheating flame so that there is an excess of acetylene. The length of the acetylene streamer and the procedure for advancing the cut are shown in figure 6–13. The use of a mild iron flux to maintain a high temperature in the deeper recesses of the cut, as shown in figure 6–13, is also effective.

6–41. Flame Hardening

a. The oxy-acetylene flame can be used to harden the surface of hardenable steels, including stainless steels, so as to provide better wearing qualities. The carbon content of the steel should be 0.35 percent or more for appreciable hardening and the best range for the hardening process is 0.40 to 0.50 percent. In this process the steel is heated to its critical temperature and then quenched, usually with water. Steels containing 0.70 percent carbon or higher can be treated in the same manner, except that compressed air, or water sprayed by compressed air, is used to quench the parts less rapidly to prevent surface checking. Quenching in oil is used for some steel compositions.

b. The oxy-acetylene flame is used merely as a heat source and involves no change in the composition of the steel, such as in case hardening where carbon or nitrogen is introduced into the surface. In cast hardening the thickness of the hardened area ranges from ⅛ to ¼-inch.

c. Ordinary welding torches are used for small work, but for most flame hardening work water-cooled torches are necessary. Tips or burners are of the multiflame type and are water cooled, because they must operate for extended periods without backfiring. Where limited areas are to be hardened the torch is

moved back and forth over the part until the area is heated above the critical temperature and then quenched. The hardening of extended areas is accomplished by steel hardening devices, consisting of a row of flames followed by a row of quenching jets and a means for moving these elements over the surface of the work or for moving the work at the required speed under the flames and jets.

6–42. Flame Softening and Flame Straightening

a. *Flame Softening.*

(1) Certain steels, called air-hardening steels, will become hard and brittle when cooled rapidly in the air from a red-hot condition. This hardening action frequently occurs when the steels are flame cut or arc welded. When subsequent machining is required the hardness must be decreased to permit easier removal of the metal.

(2) Oyx-acetylene flames adjusted to neutral can be used either to prevent hardening or to soften an already hardened surface. The action of the flame is used to rapidly heat the metal to its critical temperature. However, in flame softening the quench is omitted and the part is cooled slowly, either in still air or when shielded by an insulating material, such as asbestos.

(3) Standard type torches, tips, and heating heads, similar to those used for welding equipment used in flame hardening is not applicable.

b. *Flame Straightening.*

(1) It is often desirable or necessary to straighten steel that has been expanded and distorted from its original shape by uneven heating such as in welding and flame hardening operations. This is especially true if the steel is prevented from expanding by adjacent cold metal, as occurs when a limited area is heated on a heavy plate. The contraction, on cooling, tends to shorten the surface dimensions on the heated side of the plate. Since some of the metal has been upset permanently, the plate cannot return to its original dimensions and becomes dished or otherwise distorted.

(2) Since it is known that localized heat affects metal in this manner, this principle can be used to remedy warpage, buckling, and other irregularities from plates, shafts, structural members, and other parts. The distorted areas are heated locally and then quenched on cooling. The raised section of the metal will be drawn down. By repeating this process and by carefully applying heat in the proper areas and surfaces, irregularities can be remedied.

6–43. Flame Strengthening

Flame strengthening differs from flame hardening in that the intent is to strengthen parts locally that will have to withstand severe service conditions. This process is used particularly for parts that are subjected to frequently varying stresses conductive to failure by fatigue. The section that is to be strengthened is heated up to the hardening temperature with the oxy-acetylene flame and quenched with water, a water-air mixture, or air depending on the composition of the steel being treated.

6–44. Flame Descaling

Flame descaling, sometimes called flame cleaning, is widely used for removing loosely adhering mill scale and rust before giving steel its first coat of paint. It is also used to clean rusted structures prior to repainting. The scale and rust is caused to crack and flake off because of its rapid expansion under the oxy-acetylene flame. The flame also turns any moisture present into steam which accelerates the scale removal, and at the same time dries the surface. The loose rust is then removed by wire brushing to make the surface ready for painting (fig. 6–14). This process is also used for burning off old paints by means of standard torches equipped with long extensions and multiflame tips of varying widths and shapes.

6–45. Flame Machining (Oxygen Machining)

a. *General.* Flame machining, or oxygen machining, includes those processes where oxygen and an oxy-acetylene flame are used in removing the surfaces of metals. Several of these processes are described below:

b. *Scarfing or Deseaming.* This process is used for the removal of cracks, scale, and other defects from the surface of blooms, bil-

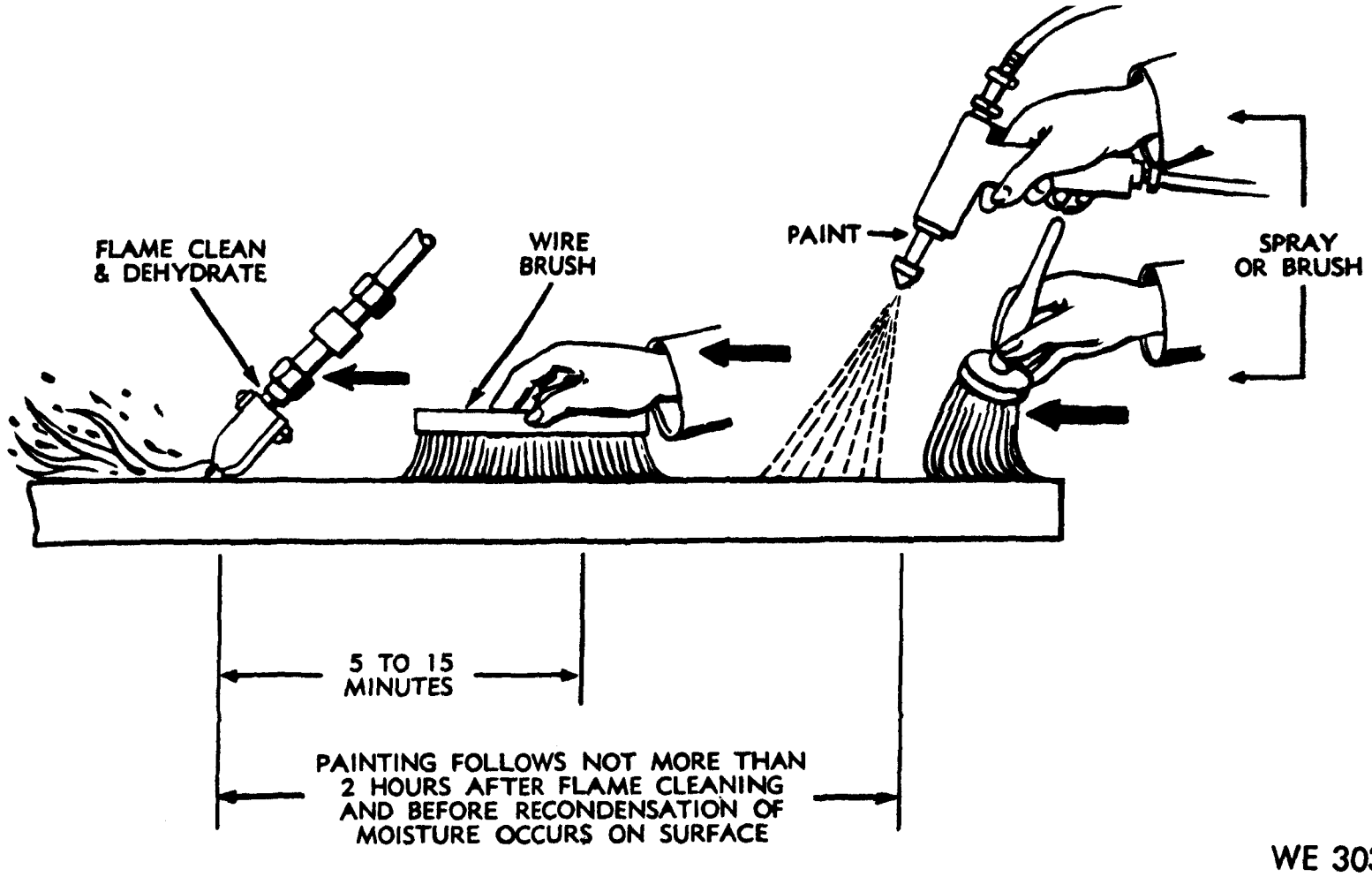

Figure 6–14. Operations and time intervals in flame cleaning prior to painting.

lets, and other unfinished shapes in steel mills. In this process, a spot or area on the surface of the metal is heated to the ignition temperature, then a jet or jets of oxygen are impinged on the preheated area and advanced as the surface is cut away. The scarfed surface is comparable to that of steel cleaned by chipping.

c. *Gouging.* This process is used for the removal of welds. It is also used in the elimination of defects such as cracks, sand inclusions, and porosity from steel castings.

d. *Hogging.* This is a flame machining process used for the removal of excess metals such as risers and sprues from castings. It is a combination of scarfing and gouging techniques.

e. *Oxygen Turning.* This flame machining process is identical in principle to mechanical turning, with the substitution of a cutting torch in place of the usual cutting tool.

f. *Surface Planing.* Surface planing is a type of flame machining similar to mechanical planing, in that metal is removed from flat or round surfaces by a series of parallel and overlapping grooves. Cutting tips with special cutting orifices are used in this operation. The operator controls the width and depth of the cut by controlling the oxygen pressure, the tip angle with relation to the metal surface, and the speed with which the cutting progresses.

g. *Rivet Cutting.* A standard type cutting torch can be used to remove rivets from plates that are to be disassembled. The rivet head is heated to its critical temperature by the preheating flames of the cutting tip and then washed off or consumed by means of the cutting oxygen. The cutting tip can then be held in a vertical position and the shank of the rivet cut through as in any cutting operation. This frees the remaining portion of the rivet sufficiently to permit it to drop out or be punched out of the hole.

6–46. Underwater Cutting

a. *General.* Underwater cutting is accomplished by use of the oxy-hydrogen torch with a cylindrical tube around the torch tip through which a jet of compressed air is blown. The principles of cutting under water is the same as cutting elsewhere except that hydrogen is used in preference to acetylene because of the greater pressure required in making cuts at great depths. Oxy-acetylene may be used up to 25 ft depths; however, depths greater than 25 ft require the use of hydrogen gas.

b. *Cutting Technique.*

(1) Fundamentally under water cutting is virtually the same as any hand cutting employed on land. Hovever, the torch used is somewhat different as it requires a tube around the torch tip so air and gas pressure can be employed to create a gas pocket and induce an extremely high rate of heat at the work area since water dispells heat much faster than air. Since the preheating flame must be shielded from contact with the water, higher pressures are used as the water level deepens (approximately 1 pound for each 2 ft of depth). Initial pressure adjustments are as follows:

Oxygen	60–85 psi
Acetylene	12–15 psi
Hydrogen	35–45 psi
Compressed Air	35–50 psi

(2) While the cutting operation itself is pretty much along the "on land" lines, a few differences are evident. Some divers light and adjust the flame before descending; however, an electric sparking devise is used for underwater igniting which causes somewhat of an explosion which inexperienced divers do not relish but this explosion is not dangerous to the operator.

(3) When starting to preheat the metal to be cut, the torch should be held so that the upper rim of the bell touches the metal. When the metal is sufficiently hot to start the cut the bell should be firmly pressed on the metal since the compressed air will travel with the high pressure oxygen and escape through the kerf. Under these circumstances the preheated gases will prevent undue "chilling" by the surrounding water. While no man on land would place his hand on the torch tip when cutting, this is precisely what the diver does since the tip, bell, or torch will become no more than slightly warm under water and the diver, by placing his left hand around the torch head, can hold the torch steady and manipulate it more easily.

(4) Owing to the rapid dissipation of heat, it is essential that the cut be started by cutting a hole a distance from the outer edge of the plate and after the hole has been cut, a horizontal or vertical cut can be swiftly continued. A diver who has not previously been engaged in underwater cutting must make a number of test cuts before he can successfully employ and underwater cutting torch.

6–47. Metallizing

a. Metallizing is a metal working process of bonding an overlay of filler metal to repair a part that has been worn, or adding metal to an item requiring dimensional changes.

b. The word "metallizing" is most commonly associated with machine shop equipment involving a wire atomizing spray gun in conjunction with oxy-acetylene, air pressure, and necessary regulating equipment. A lathe is frequently used when metallizing cylindrical parts. TM 9–3433–206–10 describes a typical wire filler type metallizing system.

c. A recently developed lightweight metallizing outfit, employed for on-site field repairs, is being introduced into the Army supply system. Operation of this new equipment is explained below:

(1) Metallizing (and light brazing) is accomplished by use of a special oxy-acetylene torch on which is attached interchangeable, and replaceable, containers of various powdered fusing alloys of specific filler metals for overlaying and filling of worn or gouged metal parts.

(2) The workpiece is cleaned and prepared as required by any normal welding process and then preheated (as indicated by the charts accompanying the kit). When the operating trigger of the torch is depressed, powder is fed through the torch into the flame spraying upon, and bonding to, the workpiece.

(3) This type of metal repair is considered almost "foolproof" and operating per-

sonnel can, with a little practice, lay any desired metallic coating or make any repairs within the scope of the process.

CHAPTER 7

ELECTRIC ARC WELDING AND CUTTING

Section I. WELDING PROCESS AND TECHNIQUE

7–1. Characteristics of the Electric Arc

a. Weld Metal Deposition. In metal arc welding a number of separate forces are responsible for the transfer of molten filler metal and molten slag to the base metal. Among these forces use those described below:

(1) *VAPORIZATION AND CONDENSATION.* A small part of the metal passing through the arc, especially the metal in the intense heat at the end of the electrode, is vaporized. Some of this vaporized metal escapes as spatter but most of it is condensed in the molten pool which is at a much lower temperature. This occurs with all types of electrodes and in all welding positions.

(2) *GRAVITY.* Gravity affects the transfer of metal in flat position welding. In other positions, smaller electrodes must be used to avoid excessive loss of weld metal, as the surface tension is unable to retain a large volume of molten metal in the weld crater.

(3) *PINCH EFFECT.* The high current passing through the molten metal at the tip of the electrode sets up a radial compressive force that tends to pinch the molten globule and detach it from the electrode.

(4) *SURFACE TENSION.* This is the force that holds the filler metal and the slag globules in contact with the molten base or weld metal in the crater. It has little to do with the transfer of metal across the arc but is an important factor in retaining the molten weld metal in place and in the shaping of weld contours.

(5) *GAS STREAM FROM ELECTRODE COATINGS.* Gases are produced by the burning and volatilization of the electrode covering and are expanded by the heat of the boiling electrode tip. The velocity and movement of this gas stream tends to give the small particles in the arc gas a movement away from the electrode tip and into the molten crater on the work.

(6) *CARBON MONOXIDE EVOLUTION FROM ELECTRODE.* According to this theory of metal movement in the welding arc, carbon monoxide is evolved within the molten metal at the electrode tip, causing miniature explosions which expel molten metal away from the electrode and toward the work. This theory is substantiated by the fact that bare wire electrodes made of high-purity iron or "killed steel" (i.e., steel that has been almost completely deoxidized in casting) cannot be used successfully in the overhead position. The metal transfer from electrode to the work, the spatter, and the crater formation are, in this theory, caused by the decarburizing action in molten steel.

b. *Arc Crater.* Arc craters are formed by the pressure of expanding gases from the electrode tip (arc blast), forcing the liquid metal towards the edges of the crater. Also, the higher temperature of the center, as compared with that of the sides of the crater, causes the edges to cool first. Metal is thus drawn from the center to the edges, forming a low spot.

c. *Arc Blow.* This is a swerving of arc direction caused by fluctuations of the magnetic field, which is induced by and surrounds the path of the welding current. The fluctuation of this magnetic field is caused by three factors, two of which are common to both alternating and direct current welding. These causes are discussed below.

(1) *LACK OF SYMMENTRY IN POSITION OF MAGNETIC MATERIAL*

ABOUT THE ARC. The resultant magnetic force on the arc acts toward the strongest magnetic path and is independent of the electrode polarity. The position of the best magnetic path, with respect to the arc, will change as the welding progresses and, consequently, the intensity and direction of the magnetic force will change. Causes for the change of the magnetic path are prescribed below:

(a) A change in the position of the arc and electrode with respect to the work as the welding progresses along the joint.

(b) The amount of weld metal deposited and the size of the air gap produced by the root or joint opening.

(c) The presence of the metal heated above the temperature at which it becomes nonmagnetic in the vicinity of the arc.

(2) *ABRUPT CHANGE IN WELDING CURRENT DIRECTIONS.* The current will take the path of least resistance, but not always the most direct path to the ground connection. The resultant force is opposite in direction to the current path away from the arc and is independent of the polarity. Care should be taken to determine the actual path of the current through the work to the ground before the ground connection is made.

(3) *EDDY CURRENTS IN THE WORK, INDUCED BY ALTERNATING CURRENT.* These eddy currents tend to neutralize, and therefore decrease, but not eliminate, the arc forces produced by the causes described above. Eddy currents are factors when welding with alternating or rectified alternating current only.

7–2. Welding Current, Voltage, and Adjustments.

a. The selection of the proper welding currents and voltages depends on the electrode size, plate thickness, welding position, and weldor's skill. Electrodes of the same size can withstand higher current and voltage values in flat position welding than in vertical or overhead welding. Since several factors affect the current and voltage requirements, data provided by welding equipment and electrode manufacturers should be used. For initial settings, table 13 may be used when welding with bare or lightly coated electrodes. The arc voltage will vary from approximately 15 volts for 1/16-inch electrodes to 30 volts for 3/8-inch electrodes of either the bare or lightly coated types. The 3/16-inch diameter electrode is usually the maximum size for vertical and overhead positions.

Table 13. Current Settings for Bare and Lightly Coated Electrodes

Electrode diameter, in.	Amperes		Standard electrode lengths, in.
	Minimum	Maximum	
1/16	40	60	11–½
3/32	70	90	14 or 18
⅛	110	135	14 or 18
5/32	150	180	14 or 18
3/16	180	220	14 or 18
*¼	250	300	14 or 18
*5/16	300	425	14 or 18
*⅜	450	550	14 or 18

* These diameters are for flat position only.

b. The mineral coated shielded-arc electrode, which produces a slag as a shield, requires a higher welding current than the cellulose coated type, which produces a large volume of gas to shield the arc stream. Table 14 shows the current requirements for the mineral coated and the cellulose coated electrodes. The welding voltage will range from 20 volts for the 3/32-inch electrode to 30 volts for the 3/8-inch heavy coated electrodes of either type.

Table 14. Current Settings for Mineral and Cellulose Coated Electrodes

Electrode used	Mineral coated		Cellulose coated	
Size, diameter, in	Flat position (amperes)	Vertical and overhead positions (amperes)	Flat position (amperes)	Vertical and overhead positions (amperes)
3/32	60	60	---	---
⅛	120	110	130	110
5/32	150	140	160	140
3/16	175	160	200	160
¼	250	---	300	---
5/16	325	---	400	---
⅜	425	---	500	---

c. The shielded-arc or heavy coated electrodes are used for most steel welding operations. They allow higher welding speeds, provide better weld metal quality, and make it possible to introduce certain alloying elements into the weld metal by means of the coating. The shielded-arc type is also used on nonferrous metals and certain alloy steels, particularly stainless steel alloys.

d. In preparation for welding, the machine

must be adjusted to provide proper welding conditions for the size and type of electrode to be used. Thes adjustments include proper polarity, current, and voltage settings. Dual control machines make possible control of both voltage and current delivered to the arc. In single control units, current is controlled manually while the voltage is adjusted automatically.

e. After the welding machine has been properly adjusted, the exposed end of the electrode should be gripped in the electrode holder so the entire fusable length can be deposited, if possible, without breaking the arc. In some cases, in welding with long electrodes, the electrode is bared and gripped in the center. Carbon and graphite electrodes should be gripped short of the full length to avoid overheating the entire electrode.

7–3. Starting the Arc

a. Two methods are used for starting the arc, striking or brushing method (fig. 7–1) and the tapping method (fig. 7–2). In both methods the arc is formed by short-circuiting the welding current between the electrode and the work surface. When the arc is struck a surge of high current causes both the end of the electrode and a small spot of the base metal beneath the electrode to melt, instantly causing the two molten metals to puddle, completing the weld.

(1) In the striking or brushing method the electrode is brought to the surface of the work in a lateral motion similar to striking a match. As soon as the electrode touches the surface, the electrode is raised to establish the arc (fig. 7–1). The arc length or gap between the electrode and the work should be approximately equal to the diameter of the electrode. When the proper arc length is obtained a sharp crackling sound is heard.

(2) In the tapping method the electrode is held in a vertical position to the work and tapped, or bounced, on the work surface (fig. 7–2). Upon contact, the electrode is raised approximately the diameter of the electrode to establish the proper arc length.

b. If the electrode is raised too slowly with either of the above arc-starting methods the electrode will freeze to the base metal. If this occurs, the electrode can usually be freed by a quick sideways twist to snap the end of the electrode from the base metal. If twisting does not dislodge the electrode, remove the holder from the electrode or stop the welding machine and free the electrode with a light chisel blow.

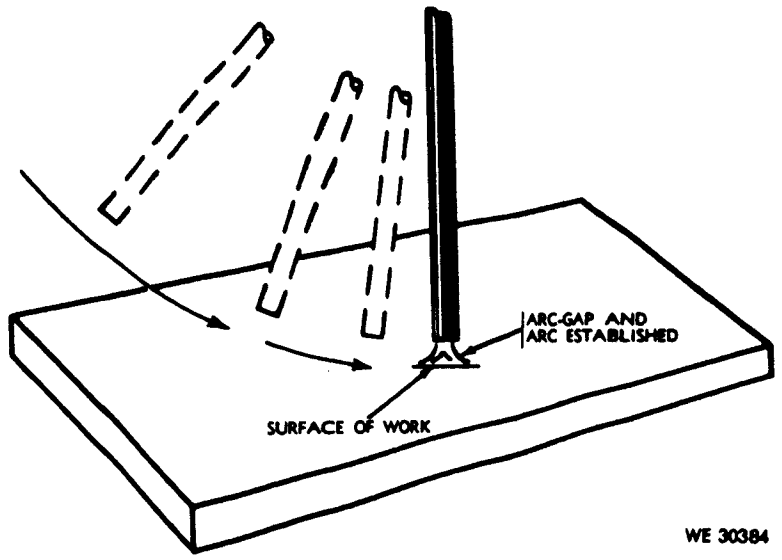

Figure 7–1. Striking or brush method of starting the arc.

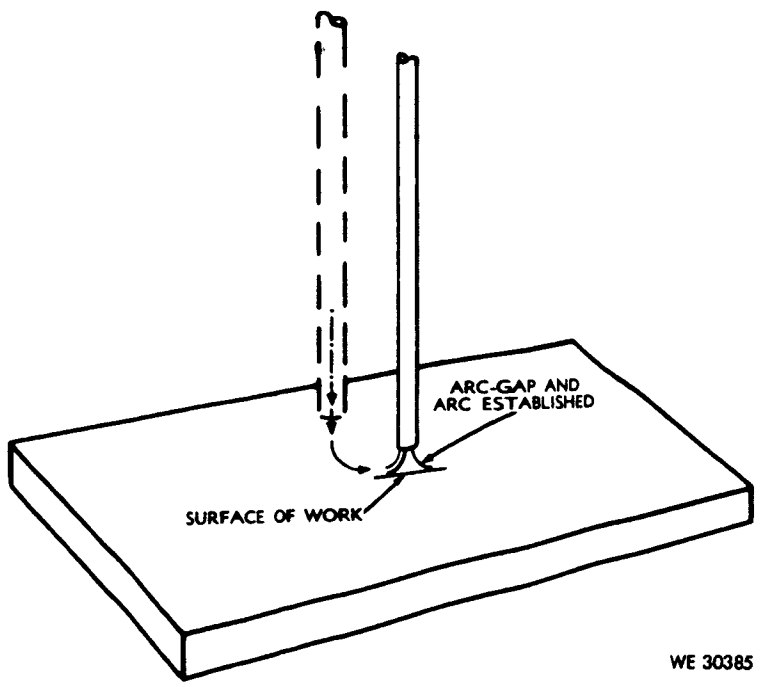

Figure 7–2. Tapping method of starting the arc.

Warning: **All work to free the electrode when the current is on should be done with the shield before the eyes.**

c. Some electrodes, known as contact electrodes in which the coating is an electrical conductor, are normally struck by holding them in contact with the work. The end of the electrode is held against the base metal and sufficient current passes through the coating

Table 15. Effects of Maladjustment of Welding Current Voltage, and Speed on the Bead Characteristics

Operating Conditions	Arc Sound	Electrode Melting Rate	Crater Appearance	Bead Appearance	Depth of Fusion	Spatter
High current	Explosive sounds with pronounced crackling.	Flux coating melts rapidly and irregularly.	Deep, long, and irregular.	Wide and thin	Deep and good	Very pronounced large drops.
Low current	Irregular crackling	Flux coating melts slowly.	Shallow and small	Rounded high crown some overlap.	Slight and irregular.	Slight.
High voltage	Some crackling soft, hissing sound.	Flux coating melts rapidly forming drops at end of electrode.	Deep but not as deep as with high current weld.	Wide and very thin	Deep and irregular.	Pronounced but less than with high current as shown above.
Low voltage	Hissing and steady sputtering sound.	Flux coating melts very slowly interferes with welding.	Shallow longer than crown some overlap, wider than with low current as shown above.	Porous rounded high crown some overlap, wider than with low current as shown above.	Slight and irregular.	Slight.
High welding speed.	Sharp crackling sound.	Balanced for good welding.	Long and shallow	Narrow, irregular some undercutting.	Very slight and incomplete.	Slight.
Low welding speed.	Sharp crackling sound.	Balanced for good welding.	Long, wide, and shallow.	Wide high crown excessive overlap.	Good	Some due to overheating.
Correct welding conditions.	Sharp crackling sound.	Balanced and uniform for good welding.	Rather deep and uniform.	Good fusion no undercut no overlap.	Deep and good	Very slight.

to establish the arc. The arc length is held constant by maintaining this contact, which is possible because the coating has a melting point lower than the metal core of the electrode. The surface contact of this coated electrode, as it melts, forms a deep cut which prevents the electrode from freezing and also shields the arc.

d. Two procedures, as described below, are used to break the arc when changing electrodes or stopping the weld for any purpose.

(1) In manual welding, when changing electrodes and the weld is to be continued from the crater, the arc is shortened and the electrode moved quickly sideways to break the arc. When the weld is resumed, it is started at the forward, or cold, end of the crater, moved backward over the crater, and then forward again to continue the weld.

(2) In manual semiautomatic welding, where filling or partial filling of the crater is required, the electrode is held stationary for a sufficient time to fill the crater and then withdrawn until the arc breaks.

7–4. Improper Arc Control

a. *Maladjustments.* The effects of improper current, voltage, and welding speed control and the effect on the welding bead are shown in table 15.

b. *Long Arc.* When welding with a long arc the protecting arc flame, as well as the molten globule at the end of the electrode, will whirl and oscillate from side to side (fig. 7–3). The fluctuating flame will permit the molten base metal to become oxidized or burned before the molten metal of the electrode reaches the base metal. The direction of the molten filler metal, as it passes through the arc, will be difficult to control and a considerable portion will be lost as spatter. The long arc melts the electrode quickly, but the metal is not always deposited at the desired point. The long arc causes poor penetration, excessive overlap, and burned or porous metal in the weld, as shown in figure 7–4.

c. *Correct Arc.* In welding with the short arc, which is the desired procedure, the molten metal leaving the electrode passes through the arc under good protection from the atmosphere by the enveloping arc flame. With this arc better control of the filler metal is experienced and a better quality of weld-metal is obtained (fig. 7–5). This type arc provides maximum penetration, better physical properties in the weld, and deposits the maximum amount of metal at the point of weld.

d. *Very Short Arc.* A very short arc is as undesirable as a long arc since it will produce much splatter, frequently freeze, and make continuous welding difficult. The results of welding with a very short arc are similar to those of the long arc (fig. 7–3).

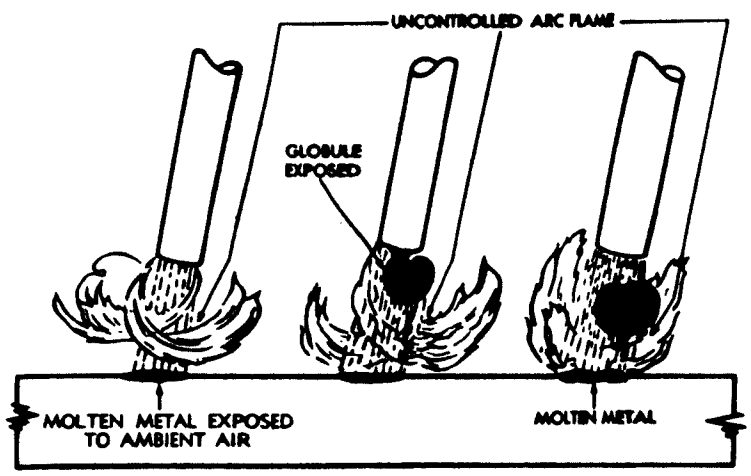

Figure 7–3. Characteristics of the long arc.

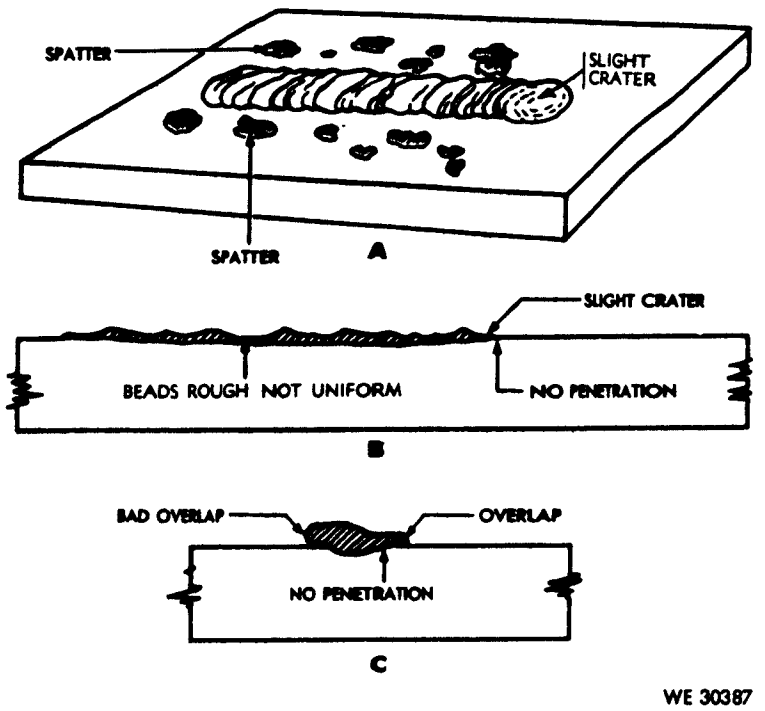

Figure 7–4. Defects in weld due to long arc.

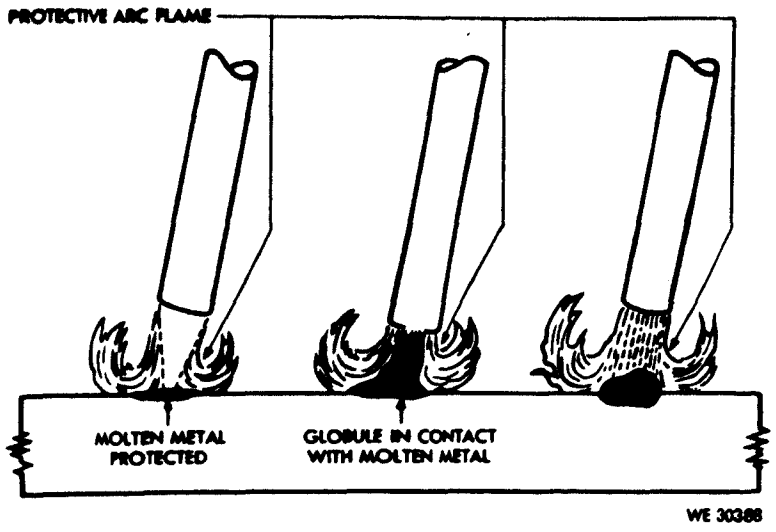

Figure 7–5. Characteristics of an arc of correct length.

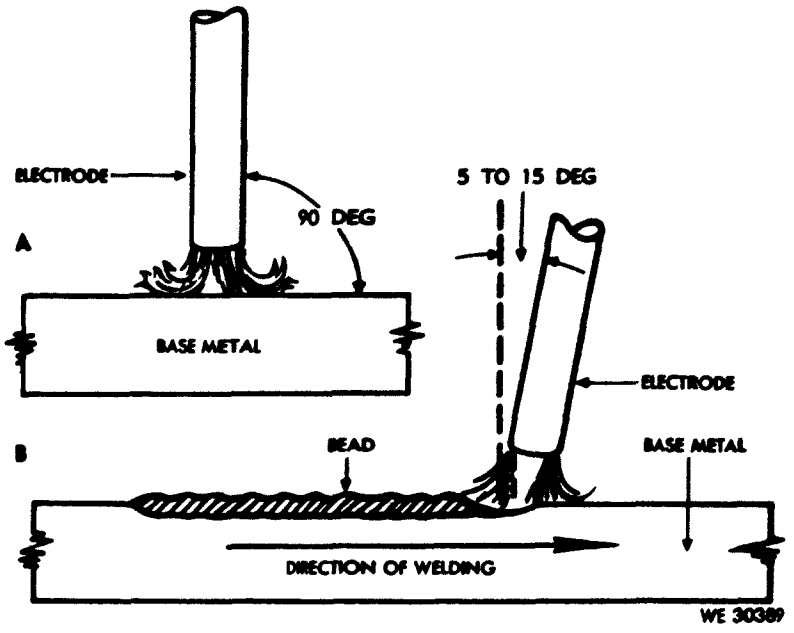

Figure 7–6. Position of electrode in making bead.

7–5. Bead Welding

a. As the arc is struck, metal melts off the end of the electrode and is deposited in a molten puddle on the work and the electrode is shortened. This causes the arc to increase in length unless the electrode is fed downward as fast as the electrode is melted off and deposited. Before moving forward, the arc should be held at the starting point for a short time to insure good fusion and allow the bead to build up slightly. With the welding machine adjusted for proper current, and polarity, good bead welds can be made by maintaining a short arc and welding in a straight line with constant speed.

b. For bead welding, the electrode in theory should be held at 90 deg to the base metal (A, fig. 7–6). However, in order to obtain a clearer view of the molten puddle, crater, and arc, the electrode should be tilted between 5 and 15 deg toward the direction of travel (B, fig. 7–6).

c. Proper arc length cannot be accurately judged by the eye but can be recognized by sound. The typical sharp crackling sound (par. 7–3a(1) should be heard during the time the electrode is moved down to and along the surface of the work.

d. A properly made bead weld (fig. 7–7) should leave little spatter on the surface of the work and the arc crater or depression in the bead as the arc is broken should be approximately 1/16-inch deep (B, fig. 7–7), varying slightly with the size of electrode and plate thickness. The bead metal should be built up

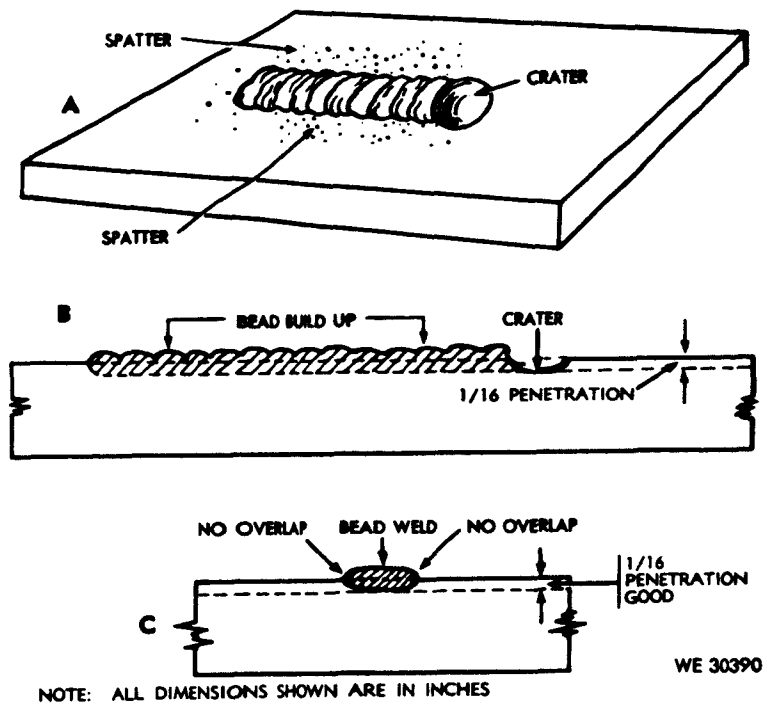

Figure 7–7. Properly made bead welds.

slightly but without weld metal overlap on the top surface, which would indicate poor fusion.

7–6. Flat Position Welding

a. *Butt Joints in Flat Position.* A butt joint is used to weld two plates having surfaces in approximately the same plane (par. 3–14). Several forms of joints are used to make butt welds in the flat position and most of these are shown in figure 7–8.

(1) Plates ⅛-inch thick can be welded in one pass, no special edge preparation is neces-

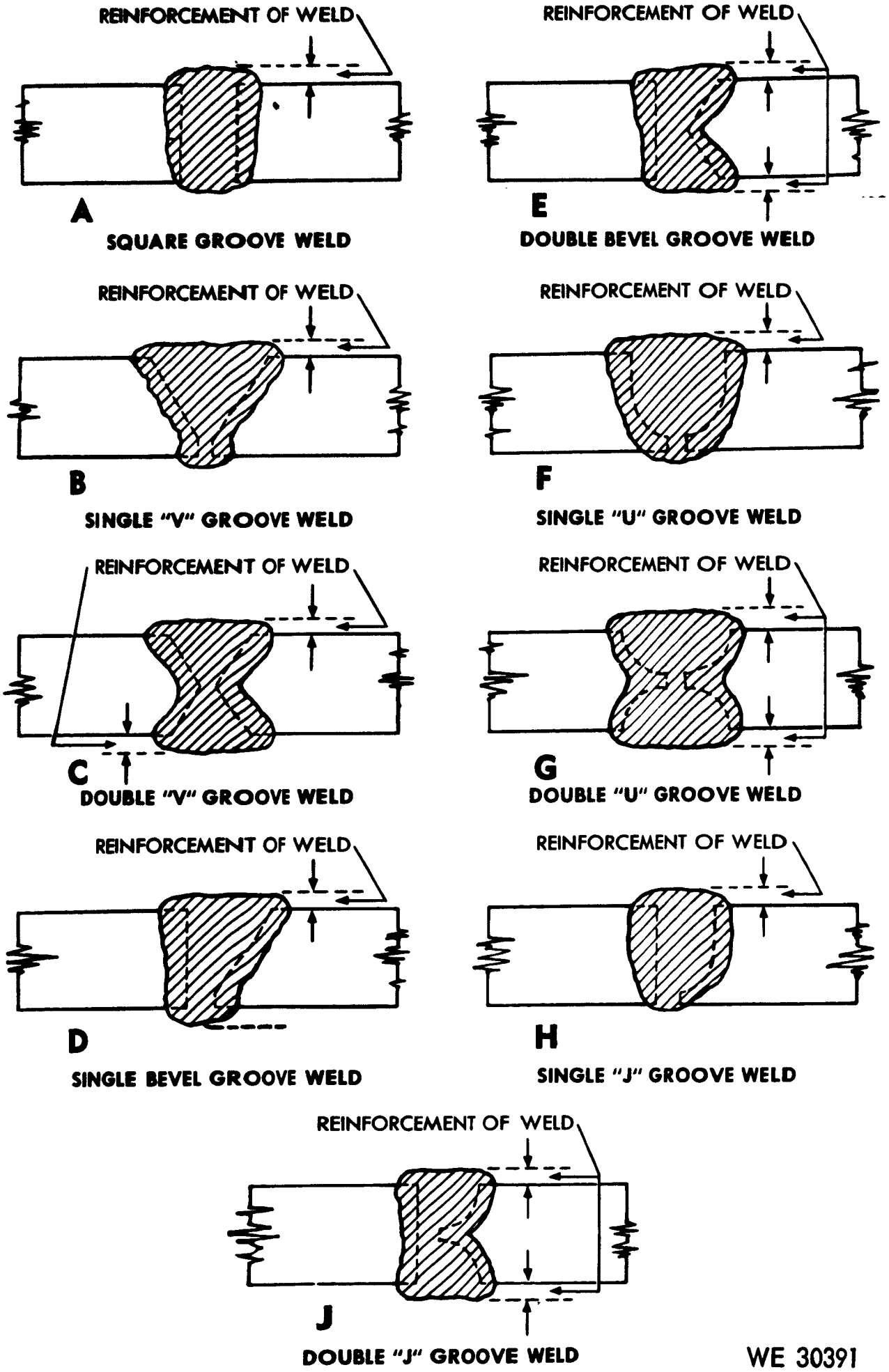

Figure 7–8. Butt joints in flat position.

sary Plates 1/8 to 3/16-inch thick can be welded with no edge preparation by running a bead weld on both sides of the joint (fig. 3–4). Tack welds should be used to keep the plates aligned. The electrode motion is the same as that used in making a bead weld (par. 7–5).

(2) In welding ¼-inch or heavier plates the edge of the plate should be prepared by leveling or by U, or V grooving (fig. 7–8) whichever is most applicable. Single or double bevels may be used depending on the thickness of the plate being welded. The first bead should be deposited to seal the space between the two plates and weld the root of the joint and this layer must be thoroughly cleaned of slag before the second layer of metal is deposited. In making multipass welds (fig. 7–9) the second, third, and fourth layers are deposited with a weaving motion of the electrode and each layer must be cleaned before the next layer is deposited. Any of the weaving motions illustrated in figure 7–10 may be used depending on the type of joint and size of the electrode used.

(3) In the weaving motion, the electrode should be oscillated or moved uniformly from side to side, with a slight hesitation at the end of each oscillation and, as in bead welding, the electrode should be inclined 5 to 15 deg in the direction of the welding. If the weaving motion is not properly performed, undercutting will occur as shown in figure 7–11. Excessive

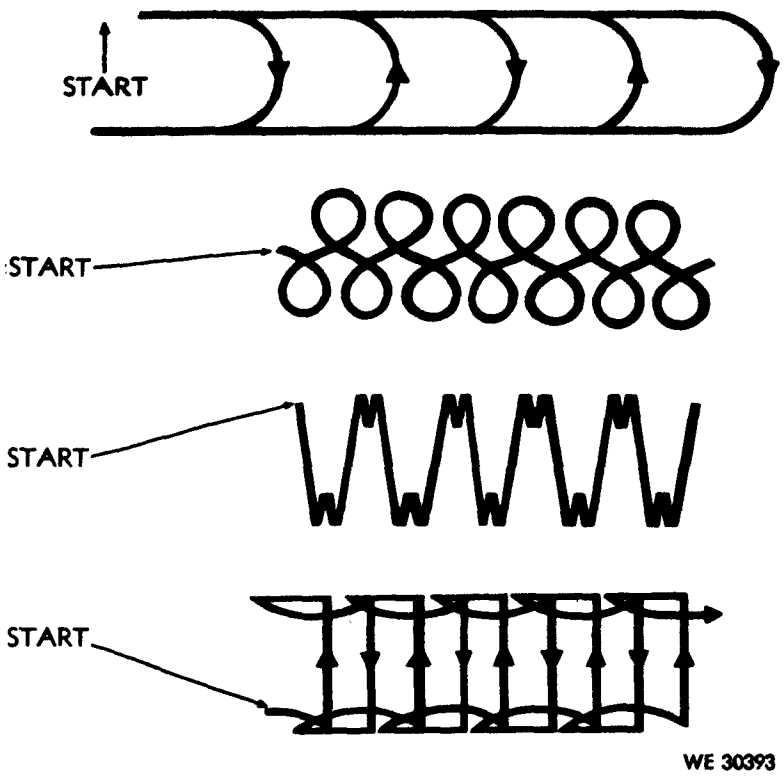

Figure 7–10. Weave motion in welding.

welding speed will also cause undercutting and poor fusion at the edges of the weave bead.

b. *Butt Joints in Flat Position With Backing Strips*

(1) Backup, or backing strips, as they shall be referred to in this manual, are used when welding 3/16-inch or heavier plates to obtain complete fusion at the root of the weld, provide better control of the arc, and act as a

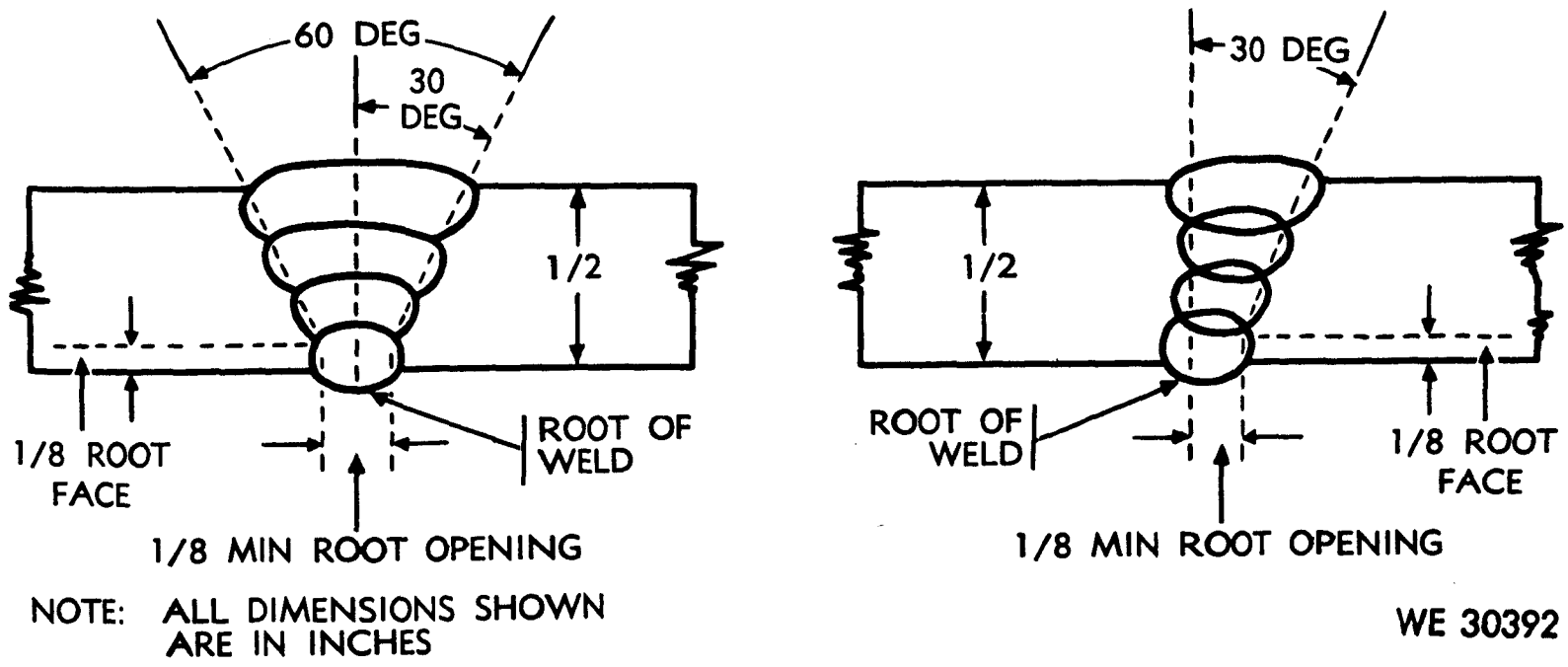

Figure 7–9. Butt welds with multipass beads.

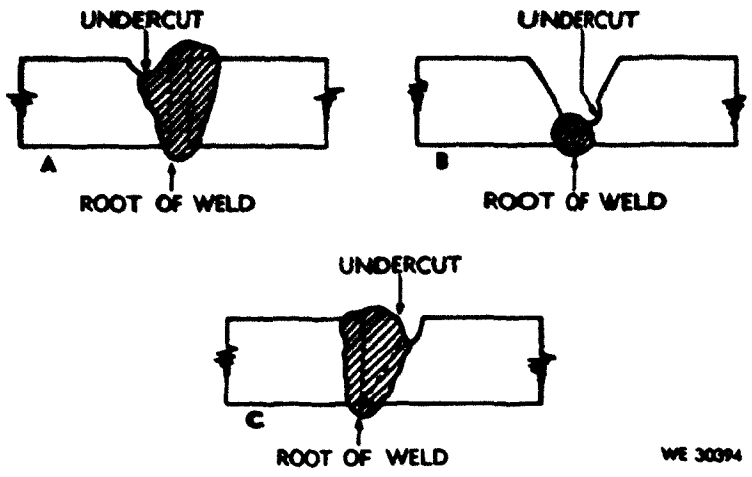

Figure 7-11. Undercutting in butt joint welds.

cushion for the first bead or layer of weld metal. The edges of the plates to be welded are prepared in the same manner as required for welding without backing strips. Backing strips approximately 1 inch wide and 3/16-inch thick are used for plates up to 3/8-inch thick and 1½-inches wide and ¼-inch thick for plates over 3/8-inch. The backing strips are tack welded to the base of the joint as shown in figure 7–12.

(2) The joint should be completed by adding layers of metal as described in paragraph a.(2) and (3) above.

(3) After the joint is completed, the backing strip can be "washed away", with a cutting torch and a seal bead may be applied along the root of the weld, if necessary.

c. *Plug Slot Joints.*

(1) Plug and slot welds are used to join two overlapping plates and depositing and filling a hole or slot which extend through the upper plate. Joints of this type are shown in figures 7–13 and 7–14.

(2) Slot welds are used in bottom strips to join facehardened armor plate edges from the back or soft side. Plug welds are used to fill holes in plates and to join overlapping plates. Both of these welds are used to join

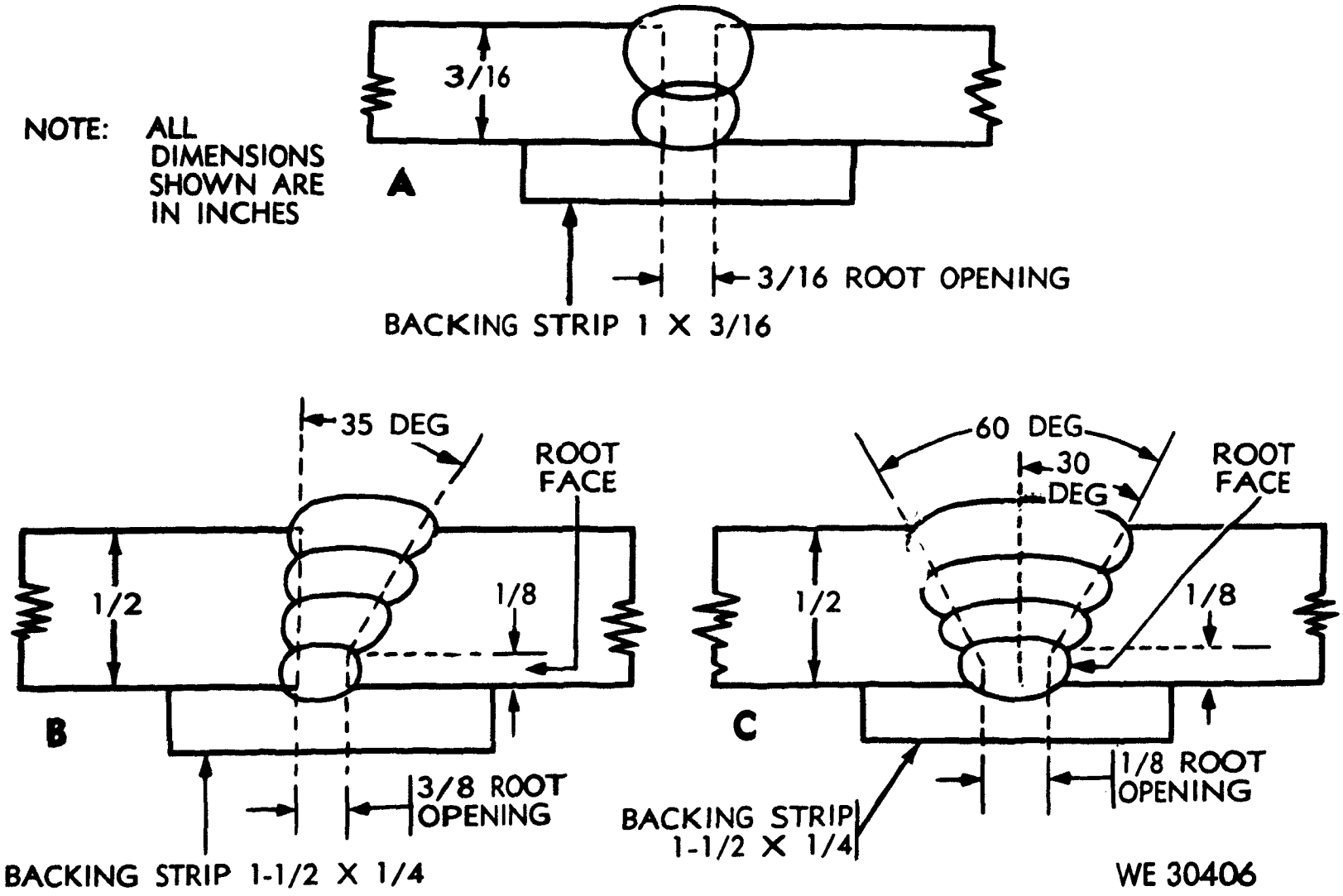

Figure 7-12. Butt welds with backing strips.

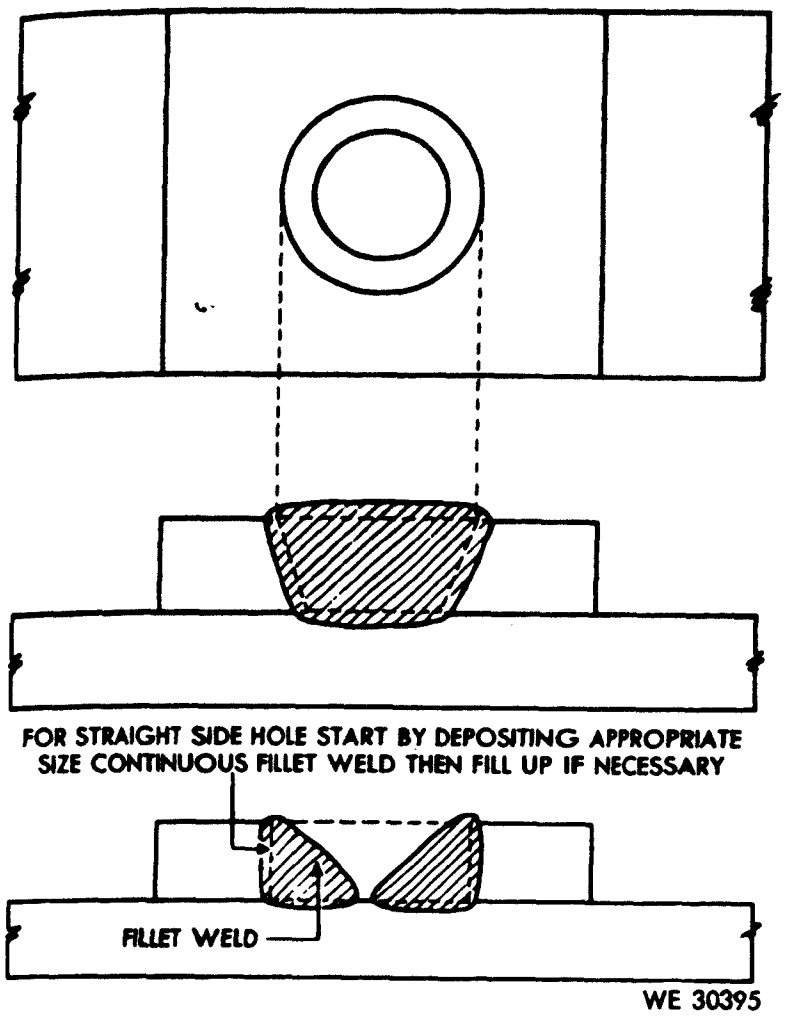
FOR STRAIGHT SIDE HOLE START BY DEPOSITING APPROPRIATE SIZE CONTINUOUS FILLET WELD THEN FILL UP IF NECESSARY
FILLET WELD
WE 30395

Figure 7–13. Plug joint in flat position.

plates where it is impossible to join them by other methods.

(3) A continuous fillet weld is made to obtain good fusion between the side walls of the hole or slot and the surface of the lower plate. The procedure for this fillet weld is the same as that required for lap welds and the hole or slot is then filled in to provide additional strength in the weld.

(4) The plug weld procedure may also be used to remove bolts or studs twisted off flush with the surface of the part, a nut somewhat smaller than the bolt or stud size is centered on the bolt or stud to be removed. A heavy coated electrode is then lowered into the nut and an arc struck on the exposed end of the broken bolt or stud. The nut is then welded to the bolt or stud and sufficient metal is added to fill the hole. The broken nut or stud can then be removed with a wrench.

7–7. Horizontal Position Welding

a. *Tee Joints.* In making tee joints in the horizontal position, the two plates are located approximately at right angles to ends other in the form of an inverted T. The ends of the vertical plate is tack welded to the surface of the horizontal plate as shown in figure 7–15.

(1) A fillet weld is used in making the

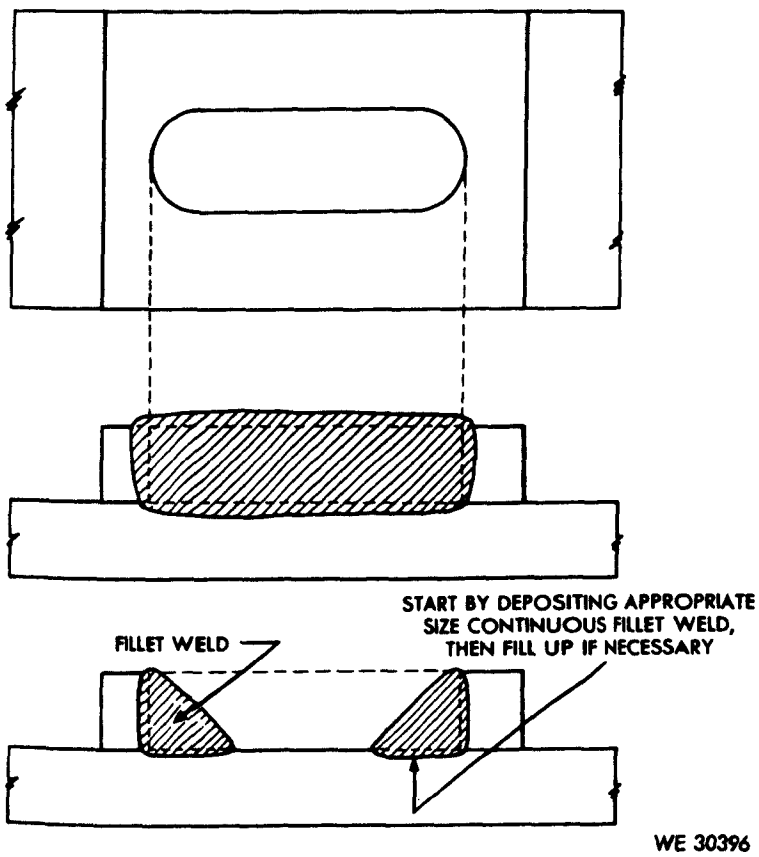

Figure 7–14. Slot joint in flat position.

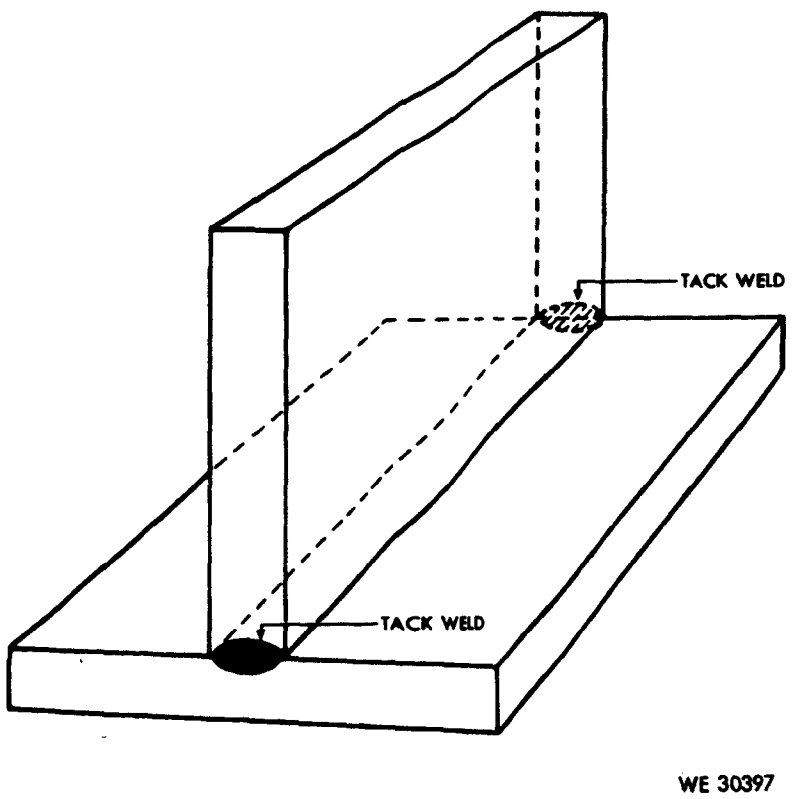

Figure 7–15. Tack weld to hold tee joint elements in place.

tee joint and the correct arc (par. 7–5c) is necessary to provide good fusion at the root and along the legs of the weld (A, fig. 7–16). The electrode should be held at a 45 deg angle to the two plate surfaces and included approximately 15 deg in the direction of welding.

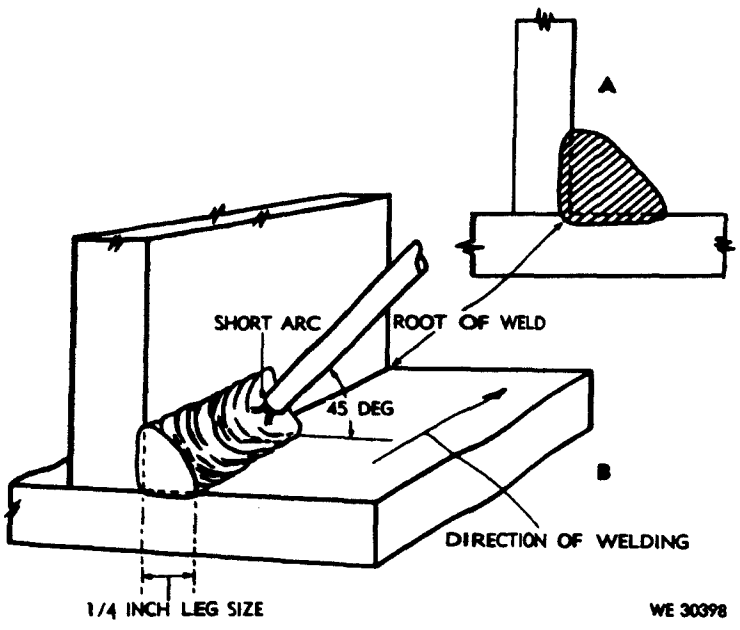

Figure 7–16. Position of electrode and fusion area of fillet weld on the joint.

(2) Light plates can be secured with a fillet weld of one pass with little or no weaving of the electrode. Welding of heavier plates may require two or more passes, in which each successive pass is made in a semicircular weaving motion as illustrated in figure 7–17. There should be a slight pause at the end of each weave so as to obtain good fusion between the weld and base metals without undercutting.

(3) A fillet welded to the joint on a ½-inch plate or heavier can be made by depositing string beads in sequence, as shown in figure 7–18.

(4) Chain-intermittent or staggered-intermittent fillet welding (fig. 7–19) is used for long tee joints. Fillet welds of this type is used where high weld strength is not required. In this type of weld the short welds are so arranged that the joint is equal in strength to a fillet weld along the entire length of a joint from one side only. Warpage and distortion is held to a minimum in chain-intermittent type welds.

b. *Lap Joints*

(1) In making lap joints, two overlapping plates are tack welded in place (fig. 7–20) and then a fillet weld is deposited along the joint.

(2) The procedure for making this fillet is the same as that used in making fillet welds in tee joints except that the electrode should be held at an approximate 30 deg angle as shown in figure 7–21. The weaving motion is used and the pause at the edge of the top plate is sufficiently long to insure good fusion and no undercut.

(3) In making lap joints on plates of different thicknesses the electrode is held so as to form an angle of 20 to 30 deg from vertical. Care must be taken not to overheat or undercut the edge of the thinner plate and

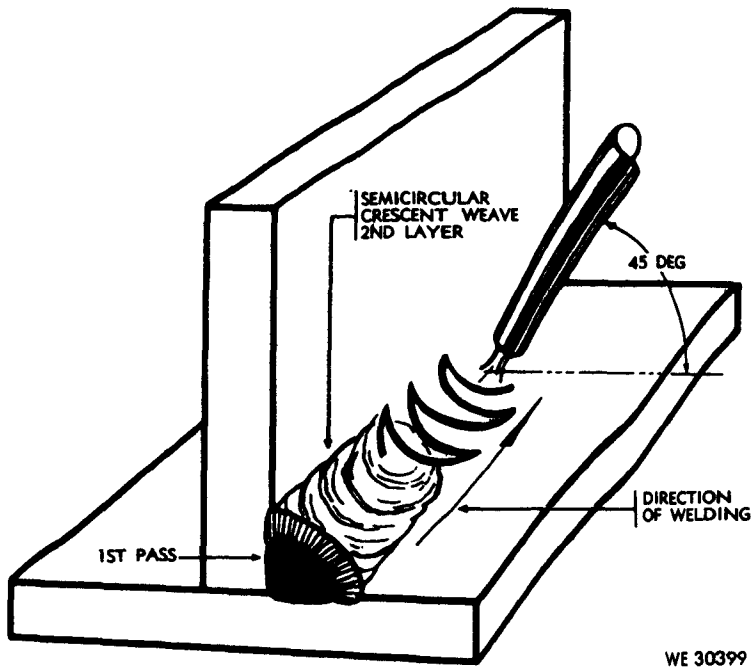

Figure 7–17. Weave motion for multipass fillet weld.

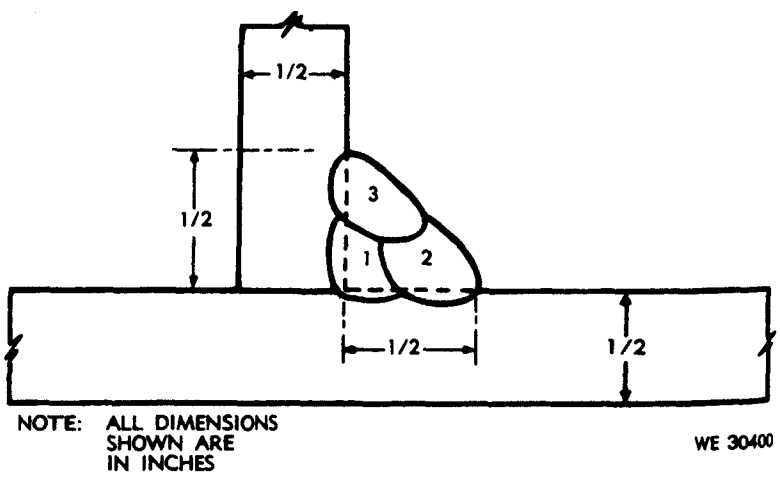

Figure 7–18. Fillet welded tee joint on heavy plate.

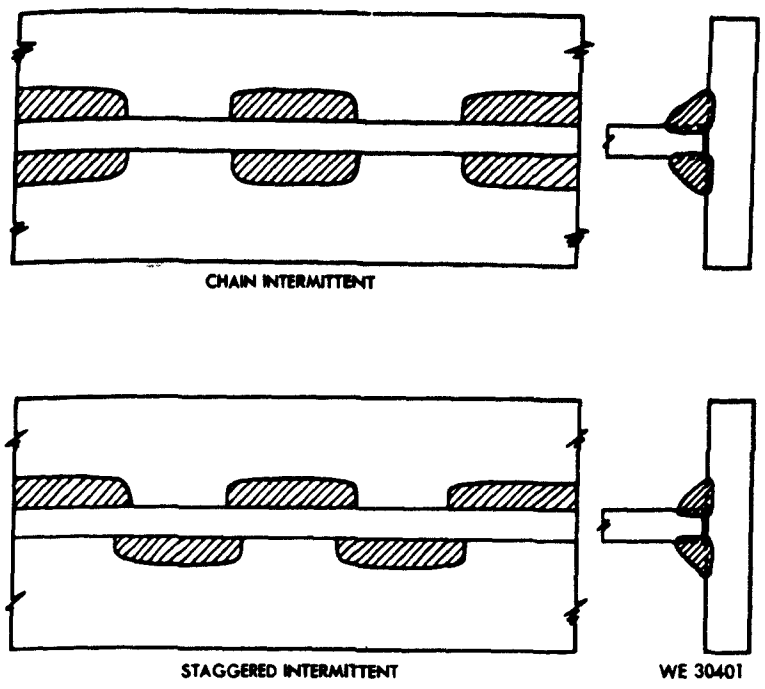

Figure 7–19. Intermittent fillet welds.

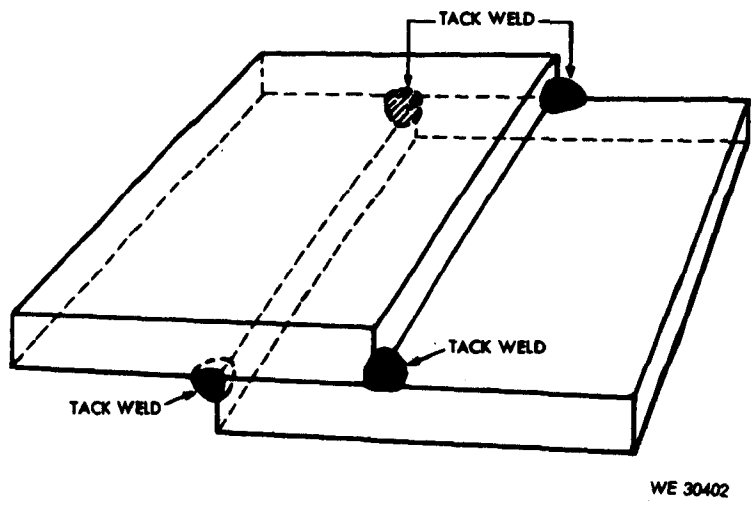

Figure 7–20. Tack welding a lap joint.

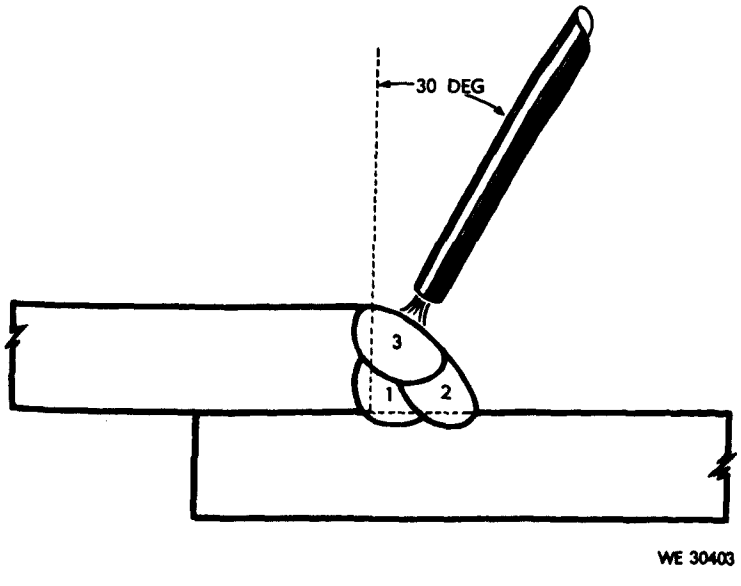

Figure 7–21. Position of electrode on lap joint.

the arc must be controlled to "wash-up" the molten metal to the edge of this plate.

7–8. Vertical Position Welding

a. *Vertical Welding.* Welding on a vertical surface is more difficult than welding in a flat position since, due to the force of gravity, the molten metal tends to flow downward.

b. *Bead Welds.*

(1) In welding in a vertical position, current settings should be less than those used in the flat position. Currents used for welding in an upward direction on a vertical plain, are slightly lower than those used when welding downward.

(2) The proper angle between the electrode and the base metal is important to the deposit of a good bead in vertical welding. The welding electrode should be held at 90 deg to the vertical, as shown at A, figure 7–22. When welding upward and weaving is necessary, the electrode should be oscillated, as shown at B, figure 7–22. When welding downward, the electrode should be inclined downward about 15 deg from the horizontal with the arc pointing upward, as shown at C, figure 7–22. When welding downward, and a weave is required, the electrode should be oscillated as shown at D, figure 7–22.

(3) When depositing a bead weld in a horizontal direction on a vertical plate, the electrode should be held at right angles to the vertical plate and tilted about 15 deg toward the direction of the welding, as shown in figure 7–23.

c. *Butt Joints.*

(1) Butt joints on plates in a vertical position are prepared for welding in the same way as those required for butt joints in flat positions (par. 7–6a), and backing strips may be used in the same manner described in paragraph 7–6b and illustrated in figure 7–12.

(2) Butt joints on beveled plates ¼-inch in thickness can be made by using a triangular weave motion, as shown in figure 7–24.

(3) Welds on ½-inch thick plates, or heavier, should be made in several passes, as shown in figure 7–25. The first pass, or root weld, should be made with the electrode at 90 deg to the vertical plate (A, fig. 7–25) and subsequent passes made at 30 deg to the verti-

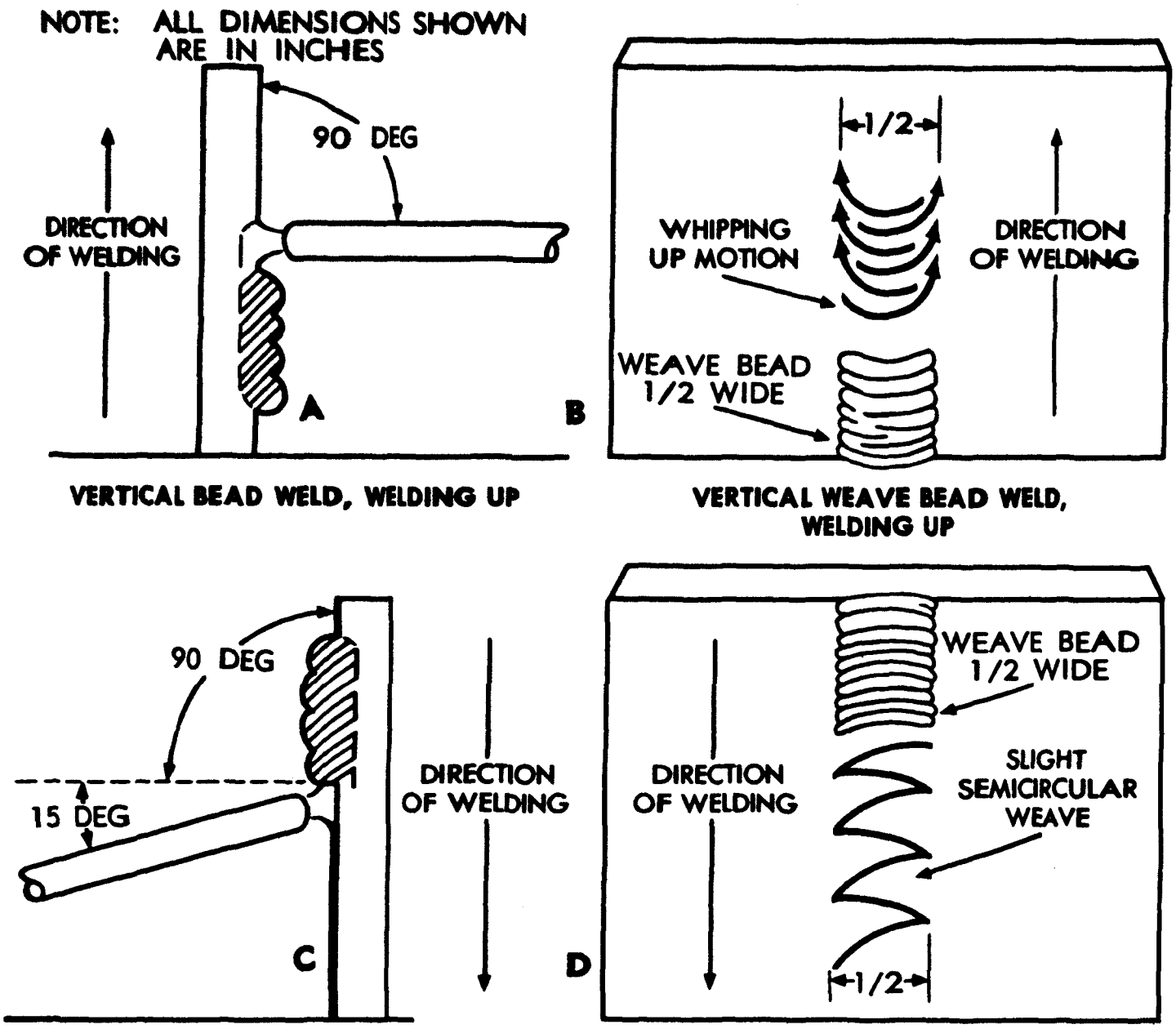

Figure 7-22. Bead welding in a vertical position.

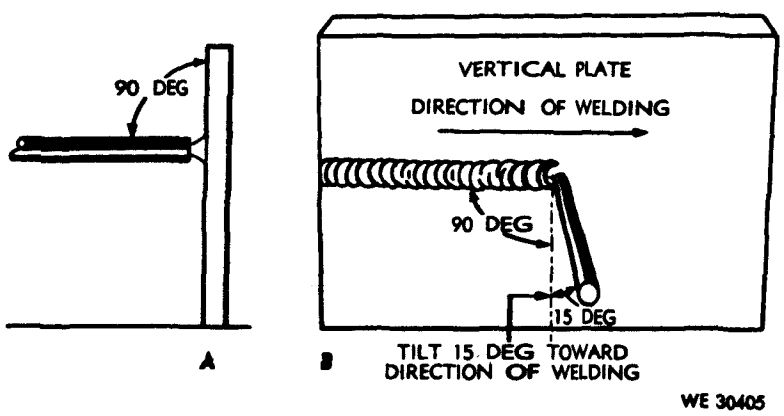

Figure 7-23. Vertical position welding with bead in horizontal position.

cal plate (B and C, fig. 7–25). The last pass completing the weld should be made with a semicircular weave motion, as shown at B, figure 7–24, with a slight "whip up" and pause of the electrode at the edge of the weld.

(4) When welding butt joints in the horizontal direction on vertical plates, the metal is deposited in multipass beads, as shown in figure 7–25. The first pass is made at an angle of 90 deg to the vertical plate and subsequent passes are made with the end of the electrode held parallel to the beveled edge opposite the edge on which the bead is being deposited.

The weaving motion should have a short pause at the edge of the weld.

d. *Fillet Welds.*

(1) In making fillet welds in lap joints the electrode should be held at 90 deg to the plates or not more than 15 deg above the horizontal for proper molten metal control.

(2) In welding fillets in the joints the electrode should be held 90 deg to the vertical position of the plate (A, fig. 7–26) and approximately ½ of the distance, or 45 deg, from each plate of the tee. In making the weaving motion care must be taken not to pass the electrode too close to either side of the tee so as not to strike an arc from the side of the electrode.

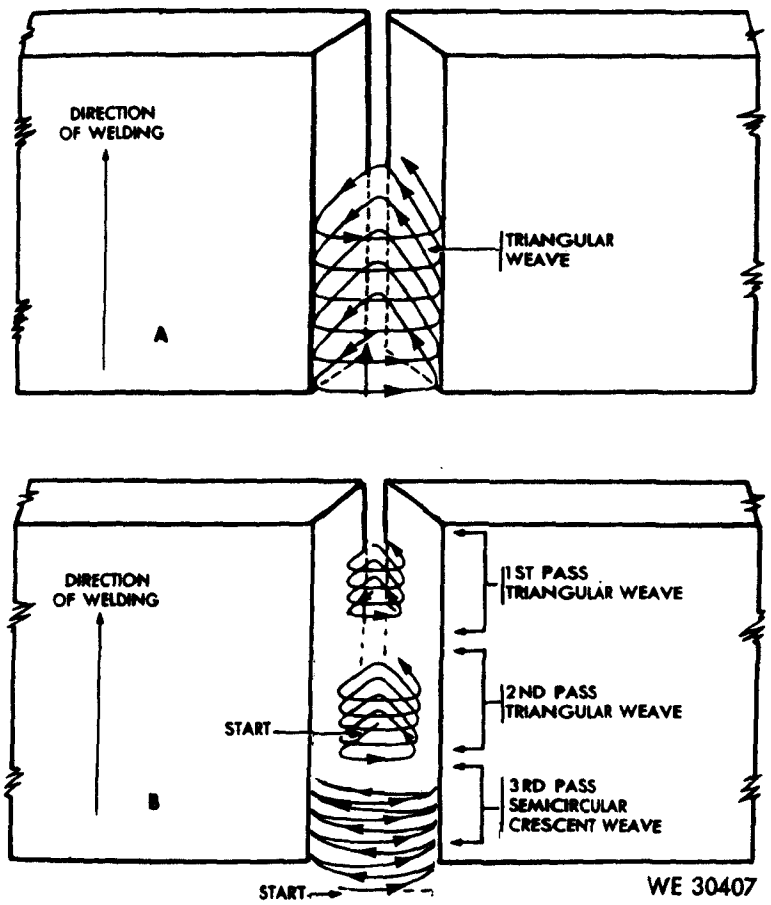

Figure 7–24. Welding butt joint in vertical position.

(3) In welding tee joints in the vertical position the weld should be started at the bottom and progress upward in a triangular weaving motion, as shown at A, figure 7–26. A slight pause in the weave at the points indicated will improve side wall penetration.

(a) If the weld metal should overheat and start to run, the electrode should be shifted

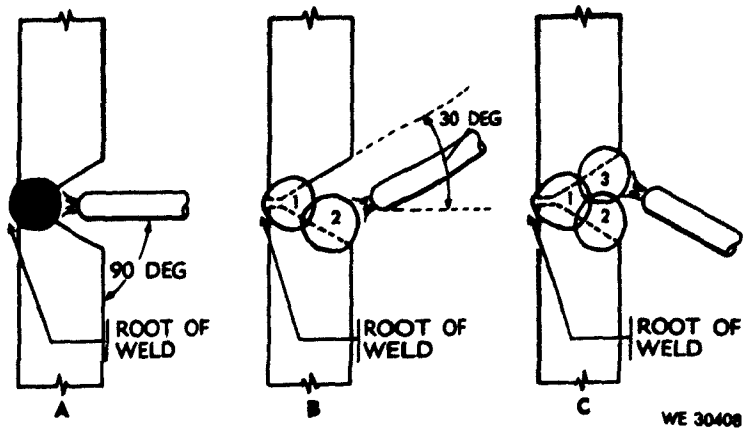

Figure 7–25. Welding butt joint in horizontal direction on vertical plates.

away quickly from the crater, without breaking the arc. This will permit the molten metal to solidify. The electrode should be returned immediately to the crater after the metal has ceased to run, in order to maintain the desired size of the weld.

(b) When more than one pass is necessary to make a fillet weld on a tee joint, either method of weaving motions (C or D, fig. 7–26) may be used.

(4) To make fillet welds on lap joints in a vertical position, the electrode should be held in a 90 deg vertical position and at a 45 deg angle to the vertical plane (E, fig. 7–26). The triangular weaving motion should be used and the pause at the end of the weave on plate G should be slightly longer than that at the edge of plate H (fig. 7–26). Care should be taken not to undercut either plate or to allow the molten metal to overlap at the edges of the weave.

7–9. Overhead Position Welding

a. *Overhead Welding.* The overhead position is the most difficult in welding and a well maintained arc is necessary in order to retain complete control of the molten metal. As in vertical welding, the force of gravity tends to cause the metal to sag on the plate or drop away from the joint. If the arc held is too long the difficulty of transferring the metal from the electrode to the metal is increased and large globules of metal will drop from the electrode. If the arc held is too short the electrode will periodically freeze to the plate (see par. 7–3b). This action can be prevented by intermittently shortening and lenghtening the arc slightly

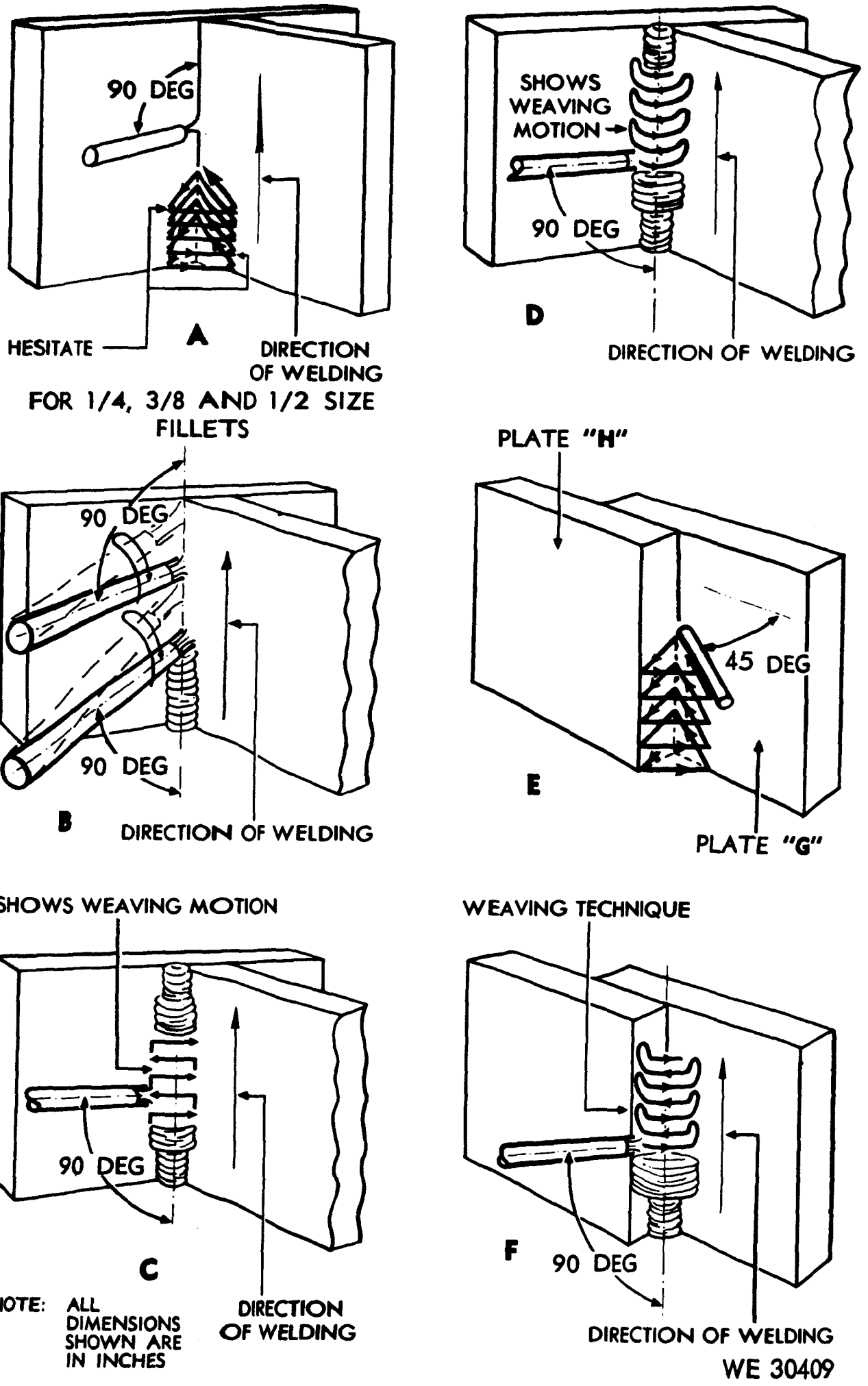

Figure 7-26. Fillet welds in vertical position.

during the welding procedure. Care should be taken to never carry too large a pool of molten metal in the weld.

b. *Bead Welds.*

(1) For bead welding in the overhead position, the electrode should be held at 90 deg to the base metal (A, fig. 7–27) or tilted approximately 15 deg in the direction of the weld, as shown in B, figure 7–27, if it will provide a better view of the arc and crater.

(2) Weave beads can be accomplished by using the motion illustrated at C, figure 7–27. A rather rapid motion at the end of each semicircular weave in order to control the molten metal deposit. Excessive weaving will cause overheating and formation of large molten metal pools, which will be hard to control.

c. *Butt Joints.*

(1) Plates for overhead position welding should be prepared the same as those required for flat positioning (par. 7–6) and is most satisfactory if backing strips are used. If the plates are beveled with a feather edge and no backing strip is used, the weld will tend to burn through unless extreme care is taken by the operator.

(2) For overhead butt welding, bead rather than weaving welds are preferred. Each bead should be cleaned and rough areas of the weld chipped before subsequent passes are made.

(3) The positions of the electrode in relation to the plates are shown in figure 7–28 for depositing bead welds on ¼ to ½-inch material. The first pass is deposited as illustrated in A, figure 7–28 and subsequent passes are shown in B and C, figure 7–28.

(4) The electrodes should not be too large in diameter as this will prevent holding the correct arc to insure good penetration at the root of the joint. Application of excessive current will create a very fluid puddle which will be difficult to control.

d. *Fillet Welds.*

(1) In making fillet welds in either tee or lap joints in the overhead position, weaving of the electrode is not recommended. The electrode should be held at approximately 30 deg to the vertical plate and moved uniformly in the direction of the welding with a 15 deg

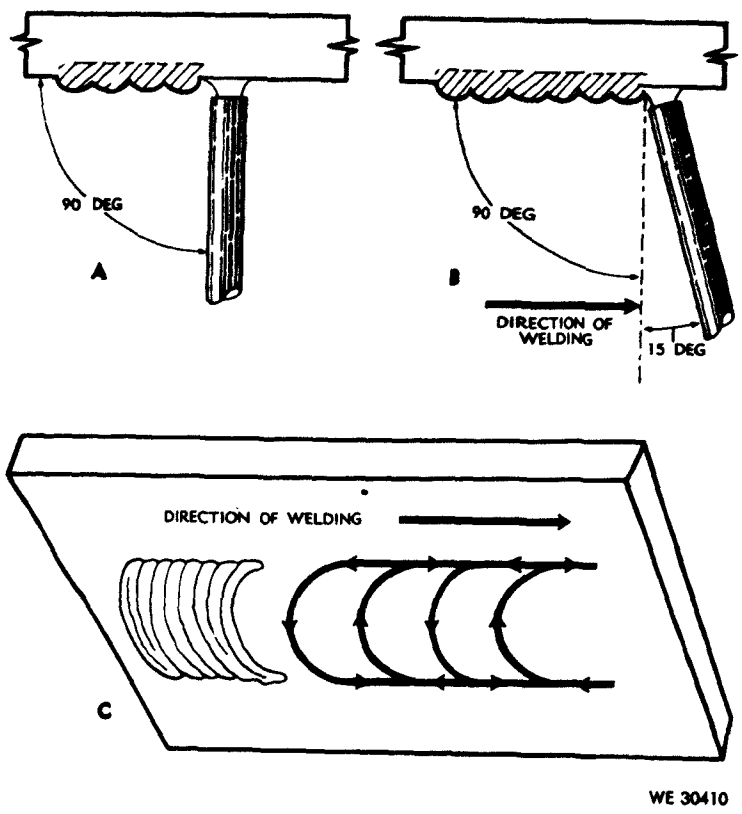

Figure 7–27. Position of electrode and weave motion in overhead position.

tilt so the operator can observe the condition of the molten metal as it is deposited (B, and C, fig. 7–29). The arc motion should be controlled to secure good penetration to the root of the weld and good fusion with the side walls of the plates. If the molten becomes too fluid and tends to sag, the electrode should be quickly whipped away from the crater and ahead of the weld to lengthen the arc and allow the metal to solidify. The electrode should then be returned to the crater and welding continued.

(2) Fillet welds for either tee or lap joints on heavy plate in overhead positions may require several passes to make a secure joint. The order in which these beads are deposited are shown at A, figure 7–29. The first, or root, pass is a string bead with good penetration and fusion to the root and side walls of the plates. Second, third, and fourth passes are then applied and although a weaving motion is not used to apply these beads the electrode is moved in a slight circular motion, as shown in C, figure 7–28. This motion of the electrode permits greater control and better distribution of the metal being deposited. All slag and oxides must be removed from the surface of the weld between each successive pass.

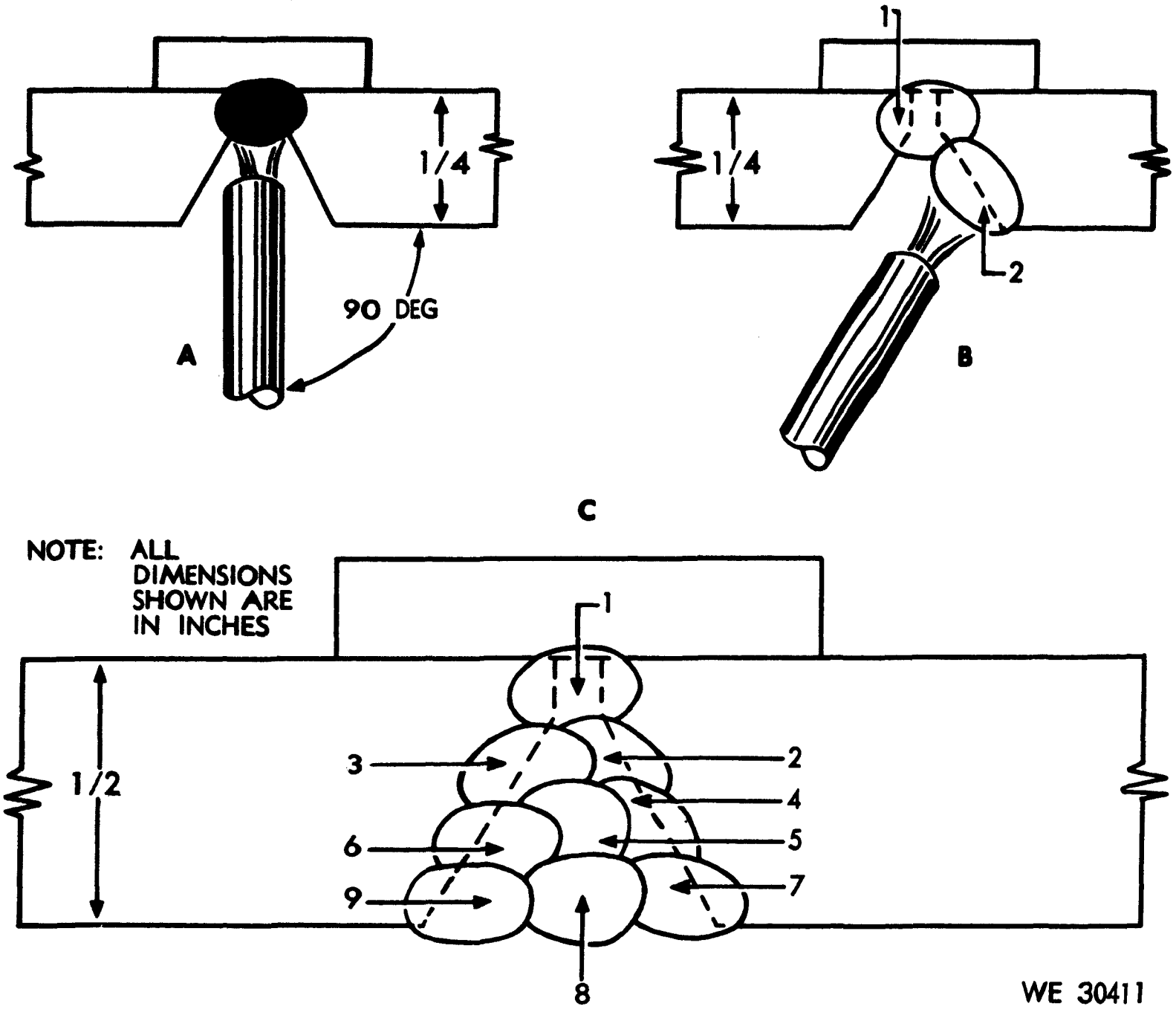

Figure 7-28. Multipass butt joint in overhead position.

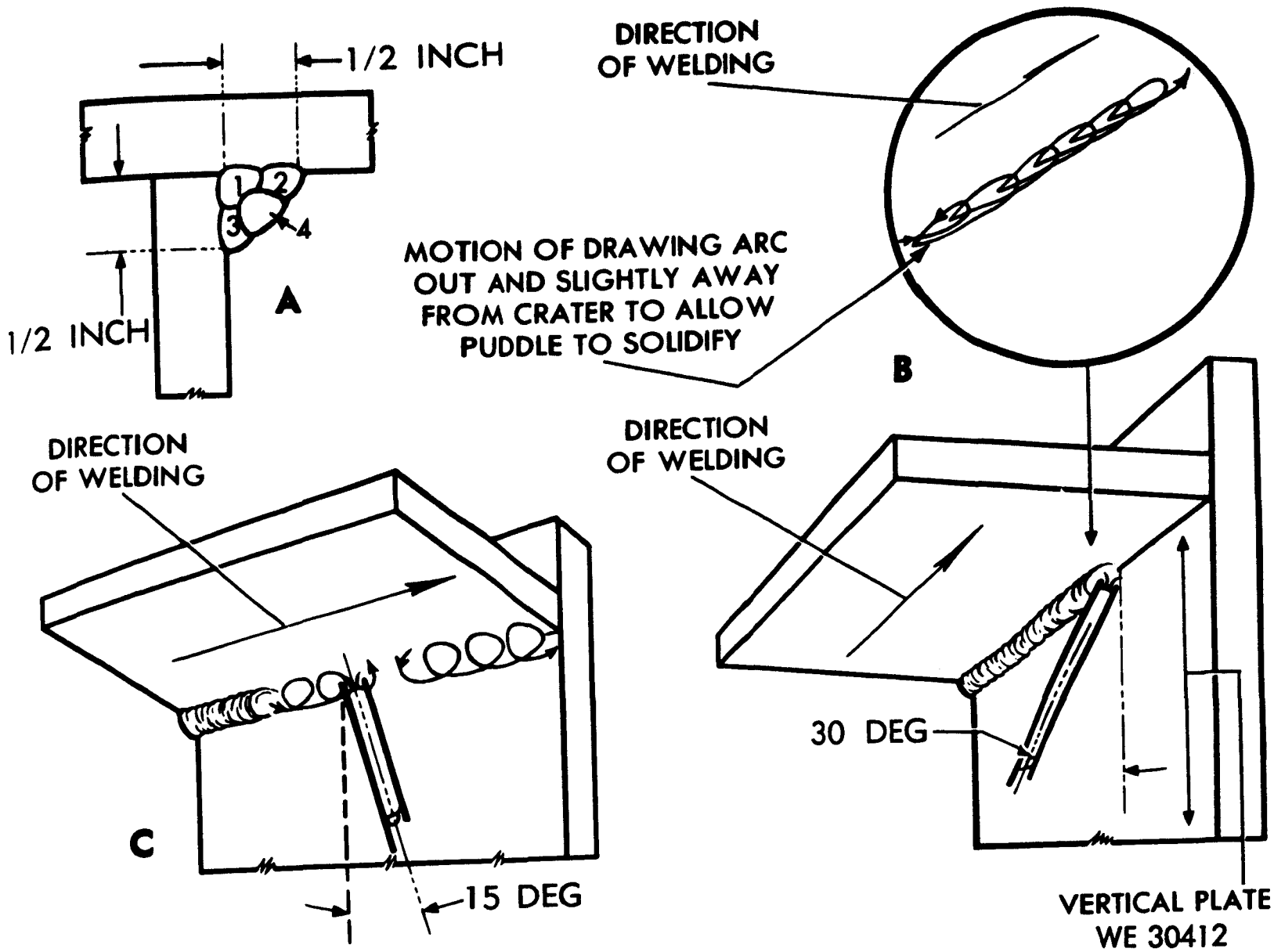

Figure 7–29. Fillet welding in overhead position.

Section II. HEAT EFFECTS IN ELECTRIC-ARC WELDING

7–10. General

a. The heat affected area in welding operations is that portion of the base metal that is changed metallurgically by the welding heat. This heat affected area consists of three zones—the very hot section next to the molten filler metal, the annealed section next to the over heated base metal and the zone adjacent to the cold base metal.

b. The rate at which heat is applied to the plates is greater in arc welding than in oxy-acetylene weldings; this causes a higher concentration of heat at a particular point and, therefore, a steeper heat climb at that particular point but less metal affected by the heat. In bare wire arc welding, the heat affected sone is narrowest; it increases with heavy coated electrodes. Stainless steel electrodes produce a smaller disturbed area than the heavy coated electrodes.

7–11. Factors Affecting the Heat Disturbed Area

a. In general, the extent of the heat affected area will increase with the amount of welding energy used in arc welding, this welding energy being a function of the voltage and amperage setting.

b. Greater penetration for arc welds is not necessarily obtained with an increase in the heat affected area because this increase is in width rather than in depth. With the exception of cored and stainless steel arc welds, the smaller the heat affected area, the more rapid removal of heat from this area by the surrounding parent metal.

c. In arc welding, the extent of the heat disturbed area is increased under the conditions listed below:

(1) When, with a constant current, the welding speed is developed.

(2) When, with a constant welding speed, the current is increased.

(3) When the arc length is shortened and the setting on the welding machine remains unchanged.

(4) The heat affected area is increased in lighter sections of the plate. Preheating increases the heat affected area.

7–12. Hardness in Arc Welding

a. Arc welding produces greater hardness than oxy-actylene welding in the heat affected area for the same type of welding operation and the hardened zone is more concentrated. In general, the greater the hardness produced in arc welds, the more likely is the weld to crack when the molten metal solidifies.

b. Arc welds on plate containing 0.35 percent carbon or higher show a greater rate of increase in hardness than steels containing a lesser amount of carbon. In alloy steels, certain elements are added to increase the strength, but these also increase the hardness produced by the carbon. The carbon content in readily weldable grades of plate, therefore, is usually kept low to prevent excessive hardness in the welding operation.

c. In plain carbon steels having 0.25 percent carbon or less, welds made by either arc or gas welding do not change to a noticable degree in hardness, ductility, or tensile strength.

Section III. ELECTRIC-ARC WELDING OF FERROUS METALS

7–13. Low Carbon Steel

a. *General.* The low carbon steels include those with a carbon content up to 0.25 percent. These low-carbon steels do not harden appreciably when welded and, therefore, do not require preheating or postheating except in special cases, such as when heavy sections are to be welded.

b. *Metal-Arc Welding.*

(1) In metal-arc welding, the bare, wash-coated or heavycoated shielded arc types of electrodes may be used. These electrodes are of the low carbon type (0.10 to 0.14 percent).

(2) Low carbon sheet or plate materials that have been exposed to low temperatures should be preheated slightly (to room temperatures) before welding.

(3) In welding sheet metal up to ⅛-inch

in thickness, the plain square butt joint type of edge preparation may be used. When long seams are to be welded in this material, the edges should be spaced to allow for shrinkage because the deposited metal tends to pull the plates together (par. 3–23). This shrinkage is less severe in arc welding than in gas welding and spacing of approximately ⅛-inch per foot of seam will suffice.

(4) The step back or skip welding procedure should be used for short seams that are fixed in place, in order to prevent warpage or distortion and minimize residual stresses.

(5) Heavy plates should be beveled to provide an included angle up to 60 deg, depending on the thickness. The parts should be tack welded in place at short intervals along the seam and the first, or root bead, should be made with an electrode small enough in diameter to obtain good penetration and fusion at the base of the joint. A ⅛ or 5/32-inch electrode is suitable for this purpose. This first bead should be thoroughly cleaned by chipping and wire brushing before additional layers of weld metal are deposited. The additional passes of filler metal should be made with a 5/32 or 3/16-inch electrode. Three passes should be made with a weaving motion for plates in flat, horizontal, or vertical positions. For overhead welding, best results are obtained by using string beads throughout the weld.

(6) In welding heavy sections that have been beveled from both sides, the weave beads should be deposited alternately on one side and then the other to reduce the amount of distortion in the welded structure. Each bead should be cleaned thoroughly to remove all scale, oxides, and slag before additional metal is deposited. The motion of the electrode should be controlled so as to make bead uniform in thickness and to prevent undercutting and overlap at the edges of the weld. All slag and oxides should be removed from the surface of the completed weld to prevent rusting.

c. *Carbon-Arc Welding.* Low-carbon sheet and plate up to ¾-inch in thickness can be satisfactorily welded by the carbon-arc welding process. The arc is struck against the plate edges, which are prepared in a manner similar to that required for metal-arc welding. A flux should be used on the joint and filler metal added as in oxy-acetylene welding. A gaseous shield should be provided around the molten base and filler metal, by means of a flux coated welding rod, and the welding should be done without overheating the molten metal. If these precautions are not taken, the weld metal will absorb an excessive amount of carbon from the electrode and oxygen and nitrogen from the air and cause brittleness in the welded joint.

7–14. Medium Carbon Steel

a. *General.* Medium carbon steels include those that contain more than 0.45 percent carbon. These steels are usually preheated to from 300 to 500 deg F. before welding. Electrodes of the low carbon, heavy coated straight or reverse-polarity type, similar to those used for metal-arc welding of low carbon steels, are satisfactory for welding steels in this group. The preheating temperatures will vary, depending on the thickness of the plates and their carbon content. After welding, the entire joint should be heated from 1,000 to 1,200 deg F., and slowly cooled to relieve stresses in the base metal adjacent to the weld.

b. *Welding Technique.* The plates should be prepared for welding in a manner similar to that used for low-carbon steels. When welding with low-carbon steel electrodes, the welding heat should be carefully controlled to avoid overheating the weld metal and excessive penetration into the side walls of the joint. This control is accomplished by directing the electrode more toward the previously deposited filler metal adjacent to the side walls than toward the side walls directly. By using this procedure, the weld metal is caused to wash up against the size of the joint and fuse with it without deep or excessive penetration.

(1) High welding heats will cause large areas of the base metal in the fusion zone adjacent to the welds to become hard and brittle. The area of these hard zones in the base metal can be kept at a minimum by making the weld with a series of small string or weave beads, which will limit the heat input. Each bead or layer of weld metal will refine the grain in the weld metal immediately beneath it and will anneal and lessen the hard-

ness produced in the base metal by the previous bead.

(2) When possible, the finished joint should be heat treated after welding for best results.

(3) In welding medium carbon steels with stainless steel electrodes, the metal should be deposited in string beads to prevent cracking of the weld metal in the fusion zone. When depositing weld metal in the upper layers of welds made on heavy sections, the weaving motion of the electrode should under no circumstances exceed three electrode diameters.

(4) Each successive bead of weld should be chipped, brushed, and cleaned prior to the laying of another bead.

7–15. High Carbon Steel

a. *General.* High-carbon steels include those that have a carbon content exceeding 0.45 percent. Because of the high-carbon content and the heat treatment usually given to these steels, their basic properties are to some degree impaired by arc welding. Preheating of 500 deg to 800 deg F., before welding and stress-relieving by heating from 1,200 deg to 1,450 deg F., with slow cooling should be used to avoid hardness and brittleness in the fusion zone. Either mild steel or stainless steel electrodes can be used with these steels.

b. *Welding Technique.*

(1) The welding heat should be adjusted to provide good fusion at the side walls and root of the joint with excessive penetration. Control of the welding heat can be accomplished by depositing the weld metal in small string beads. Excessive puddling of the metal should be avoided, because this will cause carbon to be picked up from the base metal which, in turn, will make the weld metal hard and brittle. Fusion between the filler metal and the side walls should be confined to a narrow zone. Use the surface fussion procedure prescribed for medium carbon steels (par. 1–14b).

(2) The same procedure for edge preparation, cleaning of the welds, and sequence of welding bears as prescribed for low and medium carbon steels applies to high carbon steels.

(3) Small high carbon steel parts are sometimes repaired by building up worn surfaces. When this is done, the piece should be annealed or softened by heating to a red heat and cooling slowly. Then the piece should be welded or built up with medium carbon or high strength electrodes and heat treated after welding to restore its original properties.

7–16. Tool Steel

a. *General.* Steels in this group have a carbon content ranging from 0.80 to 1.50 percent. They are rarely welded by arc welding, because of the excessive hardness produced in the fusion zone of the base metal. If arc welding must be done, either mild steel or stainless steel electrodes can be used.

b. *Welding Technique.*

(1) If the parts to be welded are small, they should be annealed or softened before welding. The edges should then be preheated up to 1,000 deg F., depending on the carbon content and thickness of the plate, and the welding done with either a mild steel or high strength electrode.

(2) High carbon electrodes should not be used for welding tools steels. The carbon picked up from the base metal by the filler metal will cause the weld to become glass hard, whereas the mild steel weld metal can absorb additional carbon without becoming excessively hard. The welded part should then be heat treated to restore its original properties.

(3) In welding with stainless steel electrodes, the edges of the plates should be preheated to prevent the formation of hard zones in the base metal. The weld metal should be deposited in small string beads to keep the heat input down to a minimum. In general, the application procedure is the same as that required for medium and high carbon steels.

7–17. High Hardness Alloy Steel

A large number and variety of alloy steels have been developed to obtain high strength, high hardness, corrosion resistance, and other special properties. Most of these steels depend on a special heat treatment process in order to develop the desired characteristic in the finished state. Many of these steels can be welded with a heavy coated electrode of the shielded-arc type whose composition is similar to that of the base metal. Low carbon electrodes can

also be used with some steels and stainless steel electrodes are effective where preheating is not practicable or is undesirable. Heat treated steels should be preheated, if possible, in order to minimize the formation of hard zones or layers in the base metal adjacent to the weld. The molten metal should not be overheated and for this reason, the welding heat should be controlled by depositing the weld metal in narrow string beads. In many cases, the procedure outlined for medium carbon steels (par. 7–14) and high carbon steels (par. 7–15) including the principles of surface fusion, can be used in the welding of alloy steels.

7–18. High Yield Strength, Low Alloy Structural Steel

a. *General.* High yield strength, low alloy structural steels are special steels that are tempered to obtain extreme toughness and durability. The special alloys and general makeup of these steels require special treatment to obtain satisfactory weldments. For general characteristics of this metal, see paragraph 2–3b(6)(*k*).

b. *Welding Technique.* Reliable welding of high yield strength, low alloy structural steels can be performed by using the following guide lines:

(1) *CORRECT ELECTRODES.* Hydrogen is the number one enemy of sound welds in alloy steels, therefore, use only LOW HYDROGEN (MIL–E–18038 or MIL–E22200/1) electrodes to prevent underbead cracking. Underbead cracking is caused by hydrogen, picked up in the electrode coating, released into the arc and absorbed by the molten metal.

(A) *MOISTURE CONTROL OF ELECTRODES.* If the electrodes are in an air-tight container, immediately upon opening the container place the electrodes in a ventilated holding oven set at 250–300 deg F. In the event that the electrodes are not in an air-tight container, put them in a ventilated baking oven and bake for 1–¼ hours at 800 deg F. Baked electrodes should, while still warm, be placed in the holding oven until used. Electrodes must be kept dry to eliminate absorption of hydrogen. Testing for moisture should be in accordance with MIL-E-22200.

Note. **Moisture stabilizer FSN 3439–400–0090 is an ideal holding oven for field use (MIL–N–45558/WC).**

c. *Low Hydrogen Electrode Selection.* Electrodes are identified by classification numbers which are always marked on the electrode containers. For low hydrogen coatings the last two numbers of the classification should be 15, 16, or 18. Electrodes of 5/32 and 1/8-inch in diameter are the most commonly used since they are more adaptable to all types of welding of this type steel. Table 16 is a list of electrodes used to weld high yield strength, low alloy structural steels and Table 17 is a list of electrodes currently established in the Army supply system.

Table 16. Electrode Numbers

E8015[1]	E9015[2]	E10015	E11015	E12015
E8016[2]	E9016	E10016	E11016	E12016
E8018	E9018	E10018	E11018	E12018

[1] The E indicates electrode; the first two or three digits indicate tensile strength; the last two digits indicate covering. 15, 16, and 18 all indicate a low hydrogen covering.

[2] Low hydrogen electrodes E80 and E90 are recommended for fillet welds since they are more ductile than the higher strength electrodes which are desirable for butt welds.

Table 17. Electrodes in the Army Supply System

Electrode Number	Size, in.	FSN
E9018	⅛ dia x 14 lg	3439–853–2716
E9018	5/32 dia x 14 lg	3439–853–2718
E11018	⅛ dia x 14 lg	3439–587–2412
E11018	5/32 dia x 14 lg	3439–587–2413
E11018	3/16 dia x 14 lg	3439–878–2158

d. *Wire Flux and Wire Gas Electrode Selection.* Wire electrode for submerged-arc and inert-gas welding are not classified according to strength. Welding wires and wire flux combinations used for steels to be stress relieved should contain no more than 0.05 percent vanadium. Weld metal with more than 0.05 percent vanadium may become brittle if stress relieved. When using either the submerged-arc or gas metal-arc welding process to weld high yield, low alloy structural steels to lower strength steels, the wire flux and wire gas combination should be the same as that recommended for the lower strength steels.

e. *Preheating.* For welding plates under 1 inch thick, preheating above 50 deg F. is not required except to remove surface moisture

from the base metal. Table 18 contains suggested preheating temperatures.

Table 18. Suggested Preheat Temperature F[1]

Plate Thickness	Shielded Metal-Arc (Manual-Arc) Welding[2]	Gas-Shielded Metal-Arc Welding[3]	Submerged-Arc Welding	
			Alloy Wire Neutral Flux[4]	Carbon Wire Alloy Flux[5]
Up to ⅛ incl	50	50	50	50
⅛ to 1 incl	50	50	50	200
Over 1 to 2 incl	150	150	200	300
Over 2	200	200	300	400

[1] Preheated temperatures above the minimum shown may be necessary for highly restrained welds. However, preheated temperatures should never exceed 400 deg F., for thickness up to and including 1-½-inches and 450 deg F., for thicknesses over 1-½-inches.

[2] Electrode E11018 is normal for this type steel. However, E12015, 16, or 18 may be necessary for thin sections, depending on design stress. Lower strength low hydrogen electrodes E100XX may also be used.

[3] Example: A-632 wire (Airco) and argon w/1 percent oxygen.

[4] Example: Oxweld 100 wire (Linde) and 709–5 flux.

[5] Example: L61 wire (Lincoln) and A0905 X 10 flux.

f. *Welding Process.* Avoid excessive heat concentration to allow area to cool rather quickly. For satisfactory welds use good welding practices, as defined in Section I, along with the following procedures:

(a) Use low weld current, fast travel speed, and the interpass temperatures, as shown in table 18.

(b) Use a straight stringer bead whenever possible.

(c) Restrict weave to partial weave pattern. Best results are obtained by a slight circular motion of the electrode with the weave area never exceeding two electrode diameters.

(d) Never use a full weave pattern.

(e) Skip weld as practical.

(f) Peening of the weld is sometimes recommended to relieve stresses while cooling of larger pieces.

(g) Fillet welds should be smooth and correctly contoured. Avoid toe cracks and undercutting. Lower strength electrodes should be used for fillet welds than those used for butt welding.

7–19. Cast Iron

a. *General.* Gray cast iron has low ductility and therefore will not expand, nor stretch to any considerable extent before breaking or cracking. Because of this characteristic, preheating is necessary when cast iron is welded by the oxy-acetylene welding process (see par. 6–19a). It can, however, be welded with the metal-arc without preheating if the welding heat is carefully controlled. This can be accomplished by welding only short lengths of the joint at a time and allowing these sections to cool. By this procedure, the heat of welding is confined to a small area and the danger of cracking the casting is eliminated. Large castings with complicated sections, such as motor blocks, can be welded without dismantling or preheating. Special electrodes designed for this purpose are usually desirable.

b. *Edge Preparation.* The edges of the joint should be chipped out or ground to form a 60 deg angle or bevel. The V should extend to approximately ⅛-inch from the bottom of the crack. A small hole should be drilled at each end of the crack to prevent it from spreading. All grease, dirt, and other foreign substances should be removed by washing with a suitable cleaning material.

c. *Welding Technique.*

(1) Cast iron can be welded with a coated steel electrode, but this method should be used as an emergency measure only. When using a steel electrode, the contraction of the steel weld metal, the carbon picked up from the cast iron by the weld metal, and the hardness of the weld metal caused by rapid cooling must be considered. Steel shrinks more than cast iron when cooled from a molten to a solid state and, when a steel electrode is used, this uneven shrinkage will cause strains at the joint after welding. When a large quantity of filler metal is applied to the joint, the cast iron may crack just back of the line of fusion unless preventive steps are taken. To overcome these difficulties, the prepared joint should be welded by depositing the weld metal in short string beads, ¾ to 1-inch long, made intermittently and, in some cases, by the step-back and skip procedure. To avoid hard spots, the arc should be struck in the V and not on the surface of the base metal. Each short length of weld metal applied to the joint should be lightly peened while hot with a small ball peen hammer and allowed to cool before additional

weld metal is applied. The peening action forges the metal and relieves the cooling strains.

(2) The electrodes used should be 1/8-inch in diameter so as to prevent excessive welding heat, the welding should be done with reverse polarity, and the weaving of the electrode should be held to a minimum. Each weld metal deposit should be thoroughly cleaned before additional metal is added.

(3) Cast iron electrodes are used where subsequent machining of the welded joint is required. Stainless steel electrodes are used when machining of the weld is not required. The procedure for making welds with these electrodes is the same as that outlined for welding with mild steel electrodes. Stainless steel electrodes provide excellent fusion between the filler and base metals but great care must be taken to avoid cracking in the weld, because stainless steel expands and contracts approximately 50 percent more than mild steel in equal changes of temperature.

d. *Studding.* Cracks in large castings are sometimes repaired by "studding" (fig. 7–30). In this process, the fracture is removed by grinding a V groove, holes are drilled and tapped at an angle on each side of the groove, and studs are screwed into these holes for a distance equal to the diameter of the studs, with the upper ends projecting approximately 1/4-inch above the cast iron surface. The studs should be seal-welded in place by one or two beads around each stud and then tied together by weld metal beads. Welds should be made in short lengths and each length peened while hot to prevent high stresses or cracking upon cooling. Each bead should be allowed to cool and be thoroughly cleaned before additional metal is deposited. If the studding method cannot be applied, the edges of the joint should be chipped out or machined with a round-nosed tool to form a U groove into which the weld metal should be deposited.

e. *Metal-Arc Brazing of Cast Iron.* Cast iron can be welded with heavy coated, reverse polarity bronze electrodes. The joints made by this method should be prepared in a manner similar to that used for oxy-acetylene braze welding of cast iron (par. 6–20). The strength of the joint depends on the quality of the bond between the filler metal and the cast iron base metal.

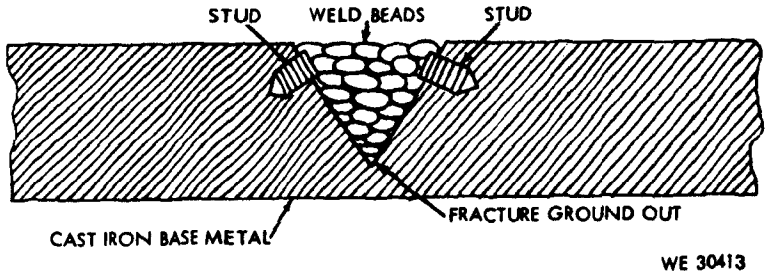

Figure 7–30. Studding method for cast iron repair.

f. *Carbon-Arc Welding of Cast Iron.* Iron castings may be welded with a carbon-arc, a cast iron rod, and a cast iron welding flux. The joint should be preheated by moving the carbon electrode along the surface, thereby preventing too rapid cooling after welding. The molten puddle of metal can be worked with the carbon electrode so as to move any slag or oxides that are formed to the surface. Welds made with the carbon arc coool more slowly and are not as hard as those made with the metal arc and a cast iron electrode. The welds are machinable.

Section IV. ELECTRIC-ARC WELDING OF NONFERROUS METALS

7–20. Aluminum Welding

a. *General.* Aluminum and aluminum alloys can be satisfactorily welded by metal-arc, carbon-arc, and other arc welding processes. The principal advantage of using arc-welding processes is that a highly concentrated heating zone is obtained with the arc and, for this reason, excessive expansion and distoriton of the metal are prevented.

b. *Metal-Arc Welding.*

(1) *PLATE WELDING.* Because of the difficulty of controlling the arc, butt and fillet welds are difficult to produce in plates less than 1/8-inch in thickness. In welding plate heavier than 1/8-inch, a plate with a 30 deg bevel will have strength equal to a weld made by the oxy-acetylene process but this weld may be porous and unsuited for liquid or gas tight

joints. Metal-arc welding is, however, particularly suitable for heavy material and is used on plates up to 2½-inches in thickness.

(2) *CURRENT AND POLARITY SETTINGS.* The current and polarity settings will vary with each manufacturer's type of electrodes and the polarity to be used should be determined by trial on the joints to be made.

(3) *PLATE EDGE PREPARATION.* In general, the design of welded joints for aluminum is quite consistent with that for steel joints. However, because of the higher fluidity of aluminum under the welding arc, some important general principles should be kept in mind. In the lighter gages of aluminum sheet less groove spacing is advantageous when weld dilution is not a factor. The controlling criterior is joint preparation. A special joint design V groove that is applicable to aluminum is shown at A, figure 7–31. This type of joint is excellent where welding can be done from one side only and where a smooth, penetrating bead is desired. The effectiveness of this particular design is dependent upon surface tension and should be applied on all material thicknesses over ⅛-inch. The bottom of the special V groove must be wide enough to contain the root pass completely. This necessitates adding a relatively large amount of filler alloy to fill the groove, but it results in excellent control of penetration and sound root pass welds. This edge preparation can be employed for welding in all positions with elimination of suckback difficulties in the overhead and horizontal welding positions. It is applicable to all weldable base alloys and all filler alloys.

c. *Welding Aluminum Castings.*

(1) Aluminum castings that have been heat treated should not be welded unless facilities for reheating after welding are available.

(2) Large castings or those of an intricate design should be preheated slowly and uniformly in a suitable furnace between 500 and 700 deg F. Small castings or those with thin sections may be preheated with a blow torch.

(3) Before welding the surface of the aluminum should be carefully cleaned (par. 6–22a(3)) and if the casting is heavy, the crack should be tooled out to form a V.

(4) Metal-arc or carbon-arc can be used but carbon-arc is preferred since it produces welds free of oxides and porosity. Flux coated electrodes are essential for good welds. All slag and flux must be removed from the furnished weld to prevent corrosion. If the casting has been preheated, the entire piece should be covered with sand or asbestos to afford slow cooling.

d. *Inert-Gas Metal-Arc Welding (MIG).* This fact, adaptable process is used with direct current reverse polarity and an inert gas to weld aluminum alloys, in any position, from 1/16-inch to several inches thick. TM 5–3431–211–15 describes the operation of a typical inert-gas, shielded-arc welding set.

(1) *SHIELDING GAS* Welding grade argon, helium, or a mixture of these gases is used for aluminum welding. Argon produces a smoother and more stable arc than helium. At a specific current and arc length, helium provides deeper penetration and a hotter arc than argon. Arc voltage is higher with helium, and a given change in arc length results in a greater change in arc voltage. The bead profile and penetration pattern of aluminum welds made with argon and helium differ. With argon the bead profile is narrower and more convex than helium. The penetration pattern shows a deep central section. Helium results in a flatter, wider bead, and has a broader underbead penetration pattern. A mixture of approximately 75 percent helium and 25 percent argon provides the advantages of both shielding gases with none of the undesirable characteristics of either. Penetration pattern and bead contour show the characteristics of both gases. Arc stability is comparable to argon.

(2) *WELDING TECHNIQUE.* The arc is struck with the electrode wire protruding about one-half inch from the cup. A frequently employed technique is to strike the arc approximately an inch ahead of the beginning of the weld and then quickly bring the arc to the weld starting point, reverse the direction of travel, and proceed with normal welding. Alternatively, the arc may be struck outside the weld groove on a starting tab. When finishing or terminating the weld, a similar practice may be followed by reversing the direction of welding, and simultaneously increasing the speed of welding to taper the width of the molten pool prior to breaking the

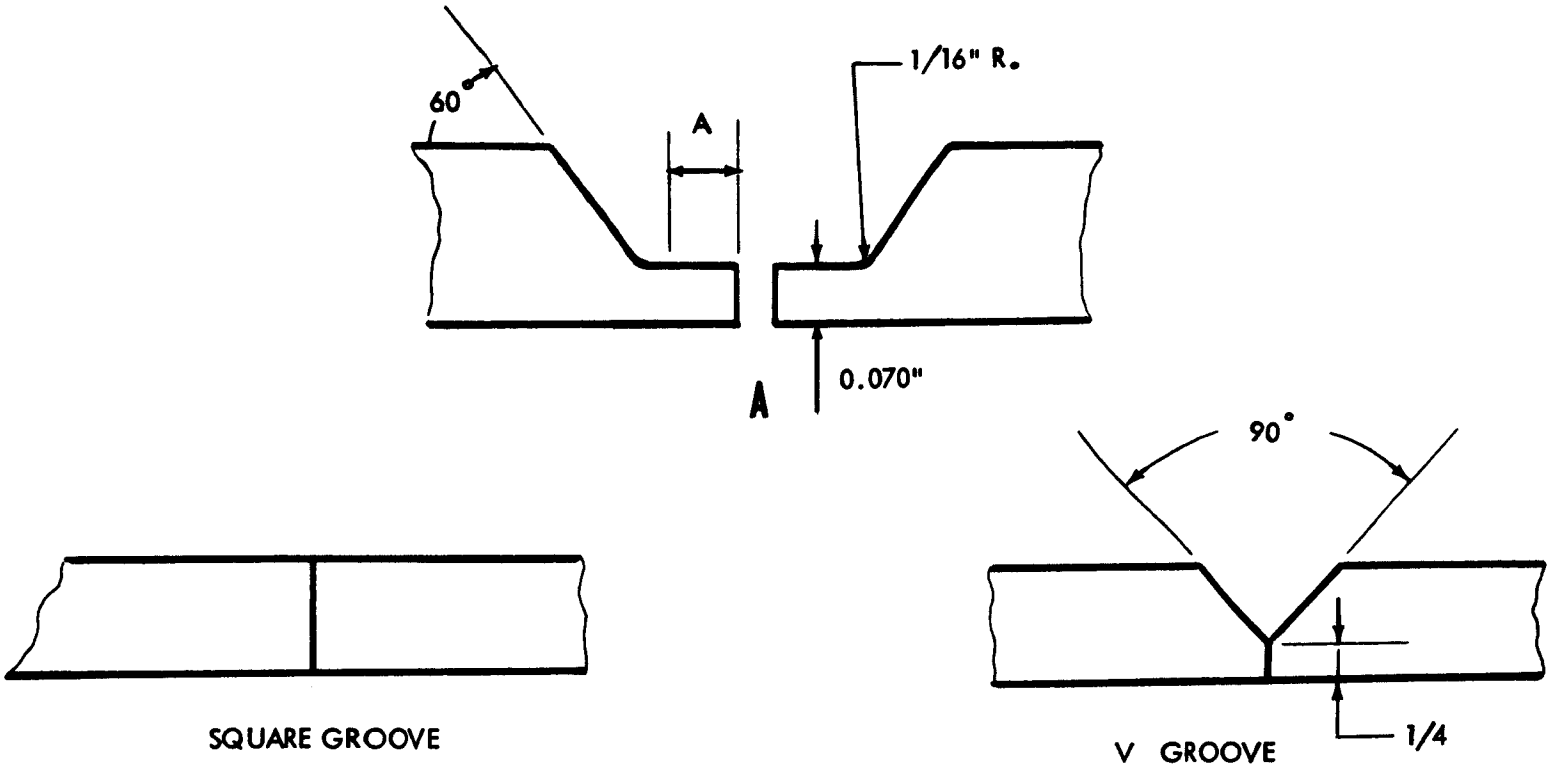

Figure 7-31. Joint design for aluminum plates.

arc. This helps to avert craters and crater cracking. Runoff tabs are commonly used. Having established the arc, the welder moves the electrode along the joint while maintaining a 70 to 85 deg forehand angle relative to the work. A string bead technique is normally preferred. Care should be taken that the forehand angle is not changed or increased as the end of the weld is approached. Arc travel speed controls the bead size. When welding aluminum with this process it is most important that high travel speeds be maintaind. When welding uniform thicknesses the electrode to work angle should be equal on all sides. When welding in the horizontal position best results are obtained by pointing the gun slightly upward. When welding thick to thin joints it is helpful to direct the arc toward the heavier section. A slight back-hand angle is sometimes helpful when welding thin to thick sections. The root pass of a joint usually requires a short arc to provide the desired penetration. Slightly longer arcs and higher arc voltages may be used on subsequent passes.

(3) *JOINT DESIGN.* Edges may be prepared for welding by sawing, machining, rotary planing, routing or arc cutting. Acceptable joint designs are shown in figure 7–32.

e. *Inert Gas Tungsten-Arc Welding (TIG).*

(1) *ALTERNATING CURRENT.*

(a) *CHARACTERISTICS OF PROCESS.* The welding of aluminum by the inert gas tungsten-arc welding process using alternating current produces an oxide cleaning action. Argon shielding gas is used. Better results are obtained when welding aluminum with alternating current by using equipment designed to produce a balanced wave or equal current in both directions. Unbalance will result in loss of power and a reduction in the cleaning action of the arc. Characteristics of a stable arc are the absence of snapping or cracking, smooth arc starting, and attraction of added filler metal to the weld puddle rather than a tendency to repulsion. A stable arc results in fewer tungsten inclusions.

(B) *WELDING TECHNIQUE.* For manual welding of aluminum with this process the electrode holder is held in one hand and filler rod, if used, in the other. An initial arc is struck on a starting block to heat the electrode. The arc is then broken and reignited in the joint. This technique reduces the tendency for tungsten inclusions at the start of the weld. The arc is held at the starting point until the metal liquifies and a well pool established. The establishment and maintenance of a suitable weld pool is important and welding must not proceed ahead of the puddle. If filler metal is required it may be added to the front or leading edge of the pool, but to one side of the center line. Both hands are moved in unison, with a slight backward and forward motion along the joint. The tungsten electrode should not touch the filler rod and the hot end of the filler rod should not be withdrawn from the argon shield. A short arc length must be maintained to obtain sufficient penetration and avoid undercutting, excessive width of the weld bead, and consequent loss of penetration control and weld contour. One rule is to use an arc length approximately equal to the diameter of the tungsten electrode. When the arc is broken, shrinkage cracks may occur in the weld crater, resulting in a defective weld. This defect can be prevented by gradually lengthening the arc while adding filler metal to the crater, quickly breaking and restriking the arc several times while adding additional filler metal into the crater, or by using a foot control to reduce the current at the end of the weld. Tacking before welding is helpful in controlling distortion. Tack welds should be of ample size and strength, and should be chipped out or tapered at the ends before welding over.

(C) *JOINT DESIGN.* Joint designs shown in figure 7–31 are applicable to the gas tungsten arc welding process with minor exceptions. Inexperienced welders who cannot maintain a very short arc may require a wider edge preparation, included angle, or joint spacing. Joints may be fused with this process without the addition of filler metal if the base metal alloy also makes a satisfactory filler alloy. Edge and corner welds are rapidly made without addition of filler metal and have a good appearance, but a very close fit is essential.

(2) *DIRECT CURRENT, STRAIGHT POLARITY.*

(a) Characteristics of Process. This process, using helium and thoriated tungsten

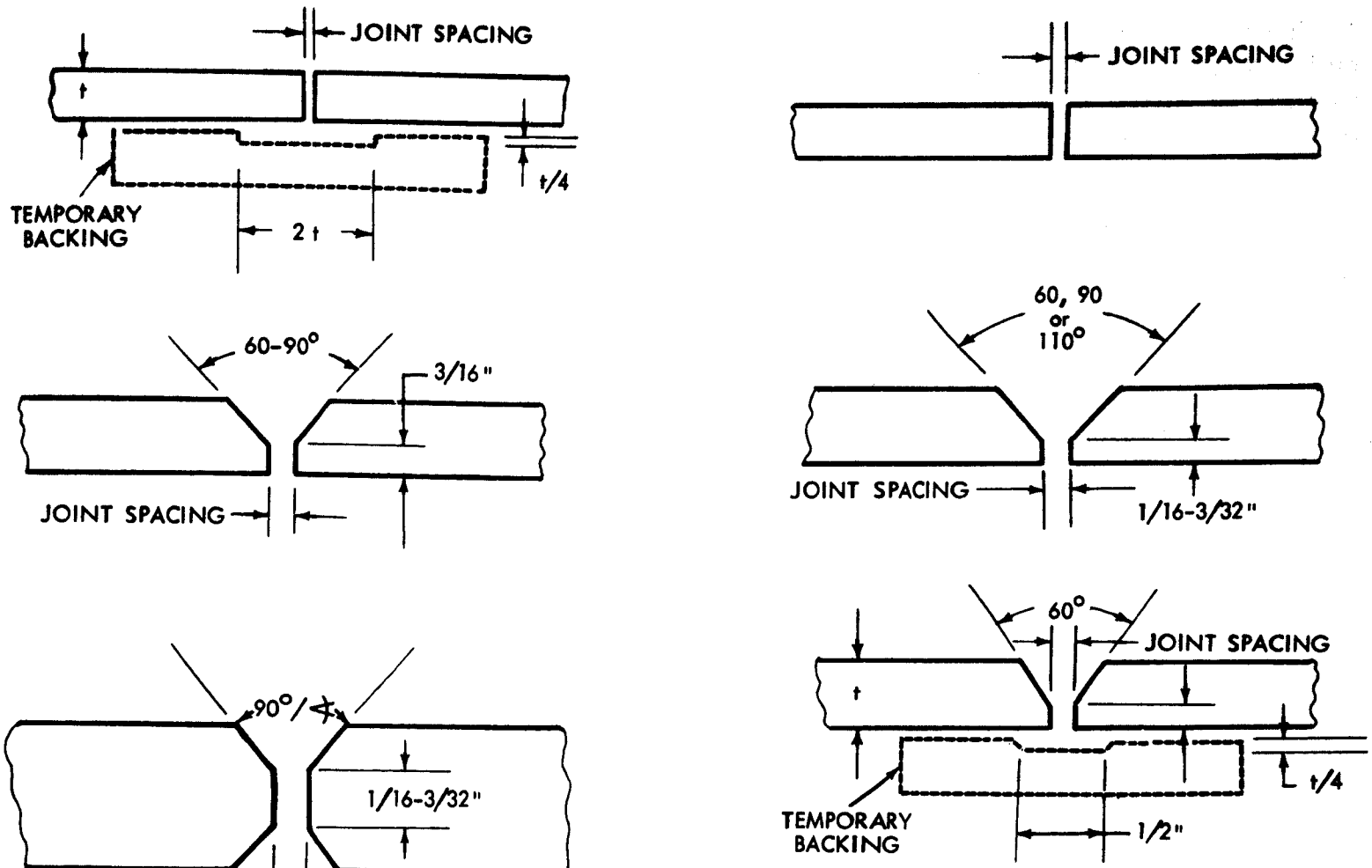

Figure 7-32. Aluminum joint designs for tungsten-arc welding processes.

electrodes, is advantageous for many automatic welding operations, especially in the welding of heavy sections. Since there is less tendency to heat the electrode, smaller electrodes can be used for a given welding current which will contribute to keeping the weld bead narrow. The use of direct current straight polarity (DCSP) provides a greater heat input than can be obtained with ac current. Greater heat is developed in the weld pool which is consequently deeper and narrower.

(B) *WELDING TECHNIQUES.* At high frequency current should be used to initiate the arc as touch starting will contaminate the tungsten electrode. It is not necessary to form a puddle as in ac welding since melting occurs the instant the arc is struck. Care should be taken to strike the arc within the weld area to prevent undesirable marking of the material. Standard techniques such as run-out tabs and foot operated heat controls are used. These are advantageous in preventing or filling craters, for adjusting the current as the work heats, and to adjust for a change in section thickness. In DCSP welding the torch is moved steadily forward and the filler wire is fed evenly into the leading edge of the weld puddle or laid on the joint and melted as the arc moves forward. In all cases the crater should be filled to a point above the weld bead to eliminate crater cracks. The fillet can be controlled by varying filler wire size. DCSP is adaptable to repair work. Preheat is not required even for heavy sections and the heat affected zone will be smaller with less distortion.

(C) *JOINT DESIGNS.* The joint designs shown in figure 7-31 are applicable to the automatic gas tungsten-arc DCSP welding process with minor exceptions. For manual DCSP the concentrated heat of the arc gives excellent root fusion. Root face will be thicker, grooves narrower and build up can be easily controlled by varying filler wire size and travel speed.

f. *Square Wave Alternating-Current Welding (TIG).*

(1) *GENERAL.* Square wave gas tungsten-arc welding with alternating-current differs from conventional balanced wave gas tungsten-arc welding in the type of welding form used. With a square wave the time of current flow in either direction is adjustable from 20 to 1. In square wave gas tungsten-arc welding there are the advantages of surface cleaning produced by positive ionic bombardment during the reversed polarity cycle, and the greater weld depth to width ratio, produced by the straight polarity cycle. Sufficient aluminum surface cleaning action has been obtained with a setting of approximately 10 percent DCRP and penetration equal to DCSP with 90 percent DCSP current.

(2) *WELDING TECHNIQUE.* It is necessary to have either superimposed high frequency or high open circuit voltage as the arc is extinguished every half cycle as the current decays toward zero and must be restarted each time. Thoriated tungsten electrodes should be used with this process and they should be precision shaped. Argon should be used to start the arc and can be used as the shielding gas, however, helium will give deeper penetration. A combination of the two gases may be used with the application deciding the shielding gas to be used. This process is in the development stage and welding parameters will have to be developed for each application.

(3) *JOINT DESIGN.* Square wave alternating-current welding offers substantial savings in weld joint preparation over conventional alternating-current balanced wave gas tungsten-arc welding. Smaller V grooves, U grooves and a thicker root face can be used and the greater depth to width weld ratio is conducive to less weldment distortion, more favorable welding residual stress distribution and less use of filler wire. With some slight modification the same joint designs can be used as in DCSP gas tungsten-arc welding (figure 7-31).

g. *Shielded Metal-Arc Welding (MIG).* In the shielded metal-arc welding process a heavy dip or extruded flux coated electrode is used with DCRP. The flux coating provides a gaseous shield around the arc and molten aluminum puddle and chemically combines and removes the aluminum oxide, forming a slag. When welding aluminum the process is rather limited due to arc spatter, eratic arc control,

limitations on thin material, and the corrosive action of the flux if it is not removed properly.

h. *Shielded Carbon-Arc Welding.* The shielded carbon-arc welding process can be used in joining aluminum. It requires flux and produces welds of the same appearance, soundness, and structure as those produced by either oxy-acetylene or oxy-hydrogen welding. Shielded carbon-arc welding is done both manually and automatically. A carbon arc is used as a source of heat while filler metal is supplied from a separate filler rod. Flux must be removed after welding otherwise severe corrosion will result. Manual shielded carbon-arc welding is usually limited to a thickness of less than $\frac{3}{8}$-inch and is accomplished by the same method used for manual carbon-arc welding of other material. Joint preparation is similar to that used for gas welding. A flux covered rod is used.

i. *Atomic Hydrogen Welding.* This welding process consists of maintaining an arc between two tungsten electrodes in an atmosphere of hydrogen gas. The process can be either manual or automatic with procedures and techniques closely related to those used in oxy-acetylene welding. Since the hydrogen envelope or shield surrounding the base metal excludes oxygen, smaller amounts of flux are required to combine or remove aluminum oxide, visibility is very good, there are fewer flux inclusions and a very sound metal is deposited.

j. *Stud Welding.*

(1) Aluminum stud welding may be accomplished with conventional electric arc stud welding equipment or using either the capacitor discharge or drawn arc capacitor discharge techniques. The conventional electric arc stud welding process may be used to weld aluminum studs $\frac{3}{16}$ to $\frac{3}{4}$-inch diameter. The aluminum stud welding gun is modified slightly by the addition of a special adapter for the control of the high purity shielding gases used during the welding cycle. An added accessory control for controlling the plunging of the stud at the completion of the weld cycle adds materially to the quality of weld and reduces spatter loss. Reverse polarity is used, with the electrode gun positive and the ground work negative. A small cylindrical or cone shaped projection on the end of the aluminum stud initiates the arc and helps establish the longer arc length required for aluminum welding.

(2) The unshielded capacitor discharge or drawn arc capacitor discharge stud welding processes are used with aluminum studs 0.062 to $\frac{1}{4}$-inch diameter. Capacitor discharge welding uses a low voltage electrostatic storage system in which the weld energy is stored at a low voltage in capacitors with high capacitance as a power source. In the capacitor discharge stud welding process a small tip or projection on the end of the stud is used for arc initiation. The drawn arc capacitor discharge stud welding process uses a stud with a pointed or slightly rounded end and does not require a serrated tip or projection on the end of the stud for arc initiation. In both cases the weld cycle is similar to the conventional stud welding process. However, use of the projection on the base of the stud provides most consistent welding. The short arcing time of the capacitor discharge process limits the melting so that shallow penetration of the workpiece results. The minimum aluminum work thickness considered practical is 0.032-inch.

k. *Electron Beam Welding.* Electron beam welding is a fusion joining process in which the workpiece is bombarded with a dense stream of high velocity electrons, and virtually all of the kinetic energy of the electrons is transformed into heat upon impact. Electron beam welding usually takes place in an evacuated chamber. The chamber size is the limiting factor on the weldment size. Conventional arc and gas heating melt little more than the surface. Further penetration comes solely by conduction of heat in all directions from this molten surface spot, thus the fusion zone widens as it deepens. The electron beam is capable of such intense local heating that it almost instantly vaporizes a hole through the entire joint thickness. The walls of this hole are molten, and as the hole is moved along the joint more metal on the advancing side of the hole is melted. This flows around the bore of the hole and solidifies along the rear side of the hole to make the weld. The intensity of the beam can be diminished to give a partial penetration with the same narrow configuration. Electron beam welding is generally applicable to edge, butt, fillet, melt-through lap,

and arc spot welds. Filler metal is rarely used except for surfacing.

l. *Resistance Welding.* The resistance welding processes (spot, seam, and flash welding) are important in fabricating aluminum alloys. These processes are especially useful in joining the high strength heat treatable alloys, which are difficult to join by fusion welding, but which can be joined by the resistance welding process with practically no loss in strength. The natural oxide coating on aluminum has a rather high and erratic electrical resistance. To obtain spot or seam welds of the highest strength and consistency it is usually necessary to reduce this oxide coating prior to welding.

(1) *SPOT WELDING.* Welds of uniformly high strength and good appearance depend upon a consistently low surface resistance between the workpieces. For most applications some cleaning operations are necessary before spot or seam welding aluminum. Surface preparation for welding generally consists of removal of grease, oil, dirt or identification markings, and reduction and improvement of consistency of the oxide film on the aluminum surface. Satisfactory performance of spot welds in service depends to a great extent upon joint design. Spot welds should always be designed to carry shear loads. However, when tension or combined loadings may be expected special tests should be conducted to determine the actual strength of the joint under service loading, as the strength of spot welds in direct tension may vary from 20 to 90 percent of the shear strength.

(2) *SEAM WELDING.* Seam welding of aluminum and its alloys is very similar to spot welding except that the electrodes are replaced by wheels. The spots made by a seam welding machine can be overlapped to form a gas or liquid tight joint. By adjusting the timing the seam welding machine can produce uniformly spaced spot welds equal in quality to those produced on a regular spot welding machine and at a faster rate. This procedure is called roll spot or intermittent seam welding.

(3) *FLASH WELDING.* All aluminum alloys may be joined by the flash welding process. This process is particularly adapted to making butt or miter joints between two parts of similar cross section. It has been adapted to joining aluminum to copper in the form of bars and tubing. The joints so produced fail in tension outside of the weld area.

7–21. Brass and Bronze Welding

a. *Metal-Arc Welding.* Brasses and bronzes can be successfully welded by the metal-arc process. The electrode used should be of the shielded-arc type with reversed polarity (electrode used should be of the shielded-arc type with reversed polarity (electrode positive). Brasses can be welded with phosphorus bronze, aluminum bronze, or silicon bronze electrodes, the choice depending on the base metal composition and the service required. Backing plates of matching metal or copper should be used. High welding current should not be used for welding copper zinc alloys (brasses), otherwise the zinc content will be volatilized. All welding should be done in the flat position, and if possible, the weld metal should be deposited with a weave approximately three times the width of the electrode.

b. *Carbon-Arc Welding.* This method can be used to weld brasses and bronzes with welding rods of approximately the same composition as the base metal. In this process, the welding is accomplished in much the same way that bronze is bonded to steel. The metal in the carbon arc is superheated and this very hot metal is alloyed to the base metal in the joint.

7–22. Copper Welding

a. *General.* Copper can be welded satisfactorily with either bare or coated electrodes. The oxygen free copper can be welded with more uniform results than the oxygen bearing copper, which tends to become brittle when welded. Due to the high thermal conductivity of copper, the welding currents are higher than those required for steel and preheating of the base metal is necessary.

b. *Metal-Arc Welding.*

(1) Metal-arc welding of copper differs from steel welding as indicated below:

(a) Greater root openings are required.

(b) Tight joints should be avoided in light sections.

(c) Larger groove angles are required, particularly in heavy sections in order to avoid excessive undercutting, slag inclusions, and

porosity. More frequent tack welds should be used.

(d) Higher preheat and interpass temperatures are required, (800 deg F., for copper, 700 deg F., for beryllium copper).

(e) Higher currents are required for a given size electrode or plate thickness.

(2) Most copper and copper alloy coated electrodes are designed for use with reverse (positive) polarity but electrodes for use with alternating currents are available.

(3) Peening is used to reduce stresses in the joints. Flatnosed tools are used for this purpose. Numerous moderate blows should be used, because vigorous blows might cause crystallizations or other defects in the joint.

c. *Inert-Gas, Tungsten-Arc Welding (TIG).*

(1) Copper can be successfully welded by inert-gas, tungsten-arc welding process. The weldability of each copper alloy group by this process depends upon the alloying elements used and for this reason no one set of welding conditions will cover all groups.

(2) Direct-current straight polarity is generally used for welding of most copper alloys. However, high frequency alternating current or direct current reverse polarity is used for beryllium copper or copper alloy sheets less than 0.050 inch thick.

(3) For some copper alloys a flux is recommended. However, a flux containing fluoride should never be used since the arc will vaporize the fluoride and cause irritation to the lungs of the operator.

d. *Carbon-Arc Welding.*

(1) This process for copper welding is most satisfactory for oxygen free copper, although it can be used for welding oxygen-bearing copper up to 3/8-inch in thickness. The root opening for the thinner material should be 3/16-inch and 3/8-inch for the heavier material. The electrode should be graphite type carbon, sharpened to a long tapered point and of a size at least equal to the welding rod. Phosphor bronze welding rods are used most frequently in this process.

(3) The arc should be sharp and directed entirely on the weld metal, even at the start. If possible, all carbon-arc welding should be done in the flat welding position or on a moderate slope.

7–23. Magnesium Welding

a. *General.* Magnesium is a very light weight, machinable, corrosion resistant, and high strength metal and is alloyed with small quantities of other metals, such as aluminum, manganese, zinc and zirconium, to obtain desired properties. It can be welded by most of the welding processes used in the metal working trades. Because this metal oxidizes rapidly when heated to its melting point (in air) a protective inert gas shield must be provided in arc welding to forestall destructive oxidation.

b. *Cleaning.* An oil coating or chrome pickle finish is usually provided on mangesium alloys for surface protection during shipment and storage. This oil, together with other foreign matter and metallic oxides, must be removed from the surface prior to welding. Chemical cleaning is preferred, because it is faster and more uniform in its action. Mechanical cleaning can be utilized if chemical cleaning facilities are not available. A final bright chrome pickle finish is recommended for parts that are to be arc welded. The various methods for cleaning magnesium are described below:

(1) Grease should be removed by the vapor degreasing system in which trichlorethylene is utilized or with a hot alkaline cleaning compound. Grease may also be removed by dipping small parts in dry-cleaning solvent or mineral-spirits paint thinner.

(2) Mechanical cleaning can be done satisfactorily with 160 to 240 grit aluminum oxide abrasive cloth, stainless steel wool, or by wire brushing.

(3) Immediately after the grease, oil, and other foreign materials have been removed from the surface, the metal should be dipped for 3 minutes in a hot solution with the following composition:

Chromic acid ($Cr O_3$) 24 ounces
Sodium nitrate ($Na NO_3$) 4 ounces
Calcium or magnesium flouride 1/8 ounce
Water_____to make 1 gal

The bath should be operated at 70 deg F. The work should be removed from the solution, thoroughly rinsed with hot water, and air dried. The welding rod should also be cleaned to obtain the best results.

c. *Joint Preparation.* Edges that are to be welded must be smooth and free of loose pieces and cavities that might contain contaminating agents such as oil or oxides. Joint preparations for arc welding various gages of mangesium are shown in figure 7–33.

d. *Safety Precautions.*

(1) Goggles, gloves, and other equipment designed to protect the eyes and skin of the welder should be worn.

(2) The possibility of fire caused by welding magnesium metal is very remote, because the temperature of incipient fusion must be reached before solid magnesium metal ignites and sustained burning occurs only if this temperature is maintained. Finely divided magnesium particles such as grinding dust, filings, shavings, borings, and chips present a fire hazard, since they ignite readily if proper precautions are not taken. Magnesium scrap of this type is not common to welding operations. If a magnesium fire does start, it can be extinguished with dry sand, dry powdered soapstone, or dry cast iron chips. The preferred extinguishing agents for magnesium fires are graphite base powders.

(3) None of the fumes given off during magnesium welding are toxic or noxious.

e. *Inert-Gas Tungsten-Arc Welding (TIG).*

(1) Because of its rapid oxidation when magnesium is heated to its melting point, an inert gas (Argon or Helium) is used to shield metal during arc welding. Arc welding, by this shielded-arc process, requires no flux and permits high welding speeds, with sound welds of high strength.

(2) Direct current machines of the stable-arc type operating on reverse polarity (electrode positive) and alternating-current machines, with a high frequency current superimposed on the magnesium. Both alternating and direct current machines are used for thin gage material. However, because of better penetrating power, alternating-current machines are used on material over $^3/_{16}$-inch thick. Helium is considered more practical than argon for use with direct current, reverse polarity. However, three times as much helium by volume as argon is required for a given amount of welding when argon is used with alternating current.

(3) The electrodes, which are composed of tungsten, are held in a water cooled torch equipped with required electrical cables and filings and an inlet and nozzle for the inert gas.

(4) The two magnesium alloys, in the form of sheet, plate, and extrusion, that are most commonly used for applications involving welding are ASTM–1A (Fed Spec QQ–M–54), which is alloyed with manganese, and ASTM–AZ31A (Fed Spec QQ–44), which is alloyed with aluminum, manganese, and zinc.

(5) In general, less preparation is required for welding with alternating current than welding with direct current because of the greater penetration obtained. Sheets up to ¼-inch thickness may be welded from one side with a square butt joint. Sheets over ¼-inch thickness should be welded from both sides whenever the nature of the structure permits, as sounder welds may be obtained as less warpage results. For a double V joint, the included angle should extend from both sides to leave a minimum $^1/_{16}$-inch root face in the center of the sheets. When welding a double V joint, the back of the first bead should be chipped out, using a chipping hammer fitted with a cape chisel, to remove oxide film, dirt, and incompletely fused areas before the second bead is added. In this manner maximum soundness is obtained.

(6) The gas should start flowing a fraction of a second before the arc is struck by brushing the electrode over the surface. With alternating current, the arc should be started and stopped by means of a remote control switch. The average arc length should be about ⅛-inch when using helium and $^1/_{16}$-inch when using argon. Current data and rod diameter are shown in table 19.

Table 19. Magnesium Weld Data

Sheet thickness (in.)	Current (amps)[1]	Rod diameter (in.)
0.030	20	1/16
0.040	30	1/16
0.050	35	3/32
0.060	45	3/32
0.070	55	⅛
0.080	60	⅛
0.090	65	⅛
0.100	70	⅛
0.125	75	⅛
0.150	80	5/32

Table 19. Magnesium Weld Data—Continued

Sheet thickness (in.)	Current (amps)[1]	Rod diameter (in.)
0.200[2]	90	5/32
0.250	100	5/32
0.500	115	5/32
1.000	130	5/32

[1] Currents shown are for all alloys except alloy M1, which requires 5 to 10 amperes more current for materials up to 0.050 inch thick and 15 to 30 amperes more current for thicker materials. Currents given are for welding speeds of 12 inches per minute.

[2] Sheets thicker than 0.150 inch should be welded in more than one pass. A current of about 60 amperes is used on the first pass and the currents given in the table are used for subsequent passes.

(7) When welding with alternating current, maximum penetration is obtained when the end of the electrode is held flush with or slightly below the surface of the work. The torch should be held nearly perpendicular to the surface of the work and the welding rod added from a position as nearly parallel with the work as possible (fig. 7–34).

(8) Welding should progress in a straight line at a uniform speed, with no rotary or weaving motion of the rod or torch, except for large corner joints or fillet welds. The welding rod can be fed either continuously or intermittently but care should be taken to avoid withdrawing the heated end from the protective gaseous atmosphere during the welding operation. Forehand welding, in which the welding rod precedes the torch in the direction of welding, is preferred. If stops are necessary, the weld should be started about ½-inch back from the end of the weld when welding is resumed.

(9) Because of the high coefficient of thermal expansion and conductivity, the control of distortion in the welding of magnesium presents some difficulties, but rigid jigging, small beads, and selected sequence in welding minimize distortion. Magnesium parts can be straightened by holding them in a position with clamps and heating to 300 to 400 deg F. If this heating is done by local torch application, care must be taken not to overheat the metal and thereby destroy its properties.

(10) If cracking is encountered during the welding of certain magnesium alloys, starting and stopping plates may be used to overcome this difficulty. These plates consist of scrap pieces of magnesium stock butted against opposite ends of the joint to be welded as shown in figure 7–35. The weld is started in one of the abutting plates, continued across the junction, along the joint to be welded, and stopped on the opposite abutting plate. If a V groove is used, the abutting plates should also be grooved. An alternate method is to start the weld in the middle of the joint and weld to each edge (fig. 7–35). Cracking may also be minimized by preheating the plate and holding jig to 200 to 400 deg F. and sometimes, by increasing the speed of the weld.

(11) Arc welding requires the filler rod to be the same composition as the alloy being joined. One exception is when welding AZ31B. In this case, grade C rod (MIL-R-6944), which produces a stronger weld metal, is used to reduce cracking.

(12) Residual stress should be relieved through heat-treatment. Stress relief is essential so that lockup stresses will not cause stress corrosion cracking. The recommended stress relieving treatment for arc-welded magnesium sheet is shown in table 20.

Table 20. Magnesium Stress Relief Data

Alloy	Temperature (+10° F.)	Time at temperature (hr)
AZ31B (annealed)	500	0.25
AZ31B (hard-rolled)	265	1.0
M1 (annealed)	500	0.25
M1 (hard-rolled)	400	1.0

(13) The only cleaning required after arc welding of magnesium alloys is wire brushing to remove the slight oxide deposit on the surface. Brushing may leave traces of iron which may cause galvanic corrosion. If necessary, clean as in *b* above. Arc-welding "smoke" can be removed by immersing the parts for ½ to 2 minutes at 180 deg to 212 deg F., in a solution composed of 16 ounces tetrasodium pyrophosphate ($Na_4 P_2 0_7$), 16 ounces sodium metaborate ($Na B 0_2$), and enough water to make 1 gallon.

7–24. Titanium Welding

a. *General.* The procedures for welding titanium and titanium alloys are similar to other metals. Some processes, such as ocyacetylene or arc-welding processes using active gases, cannot be used due to the high chemical activity and sensitivity of titanium to embrittlement by contamination. Processes that are

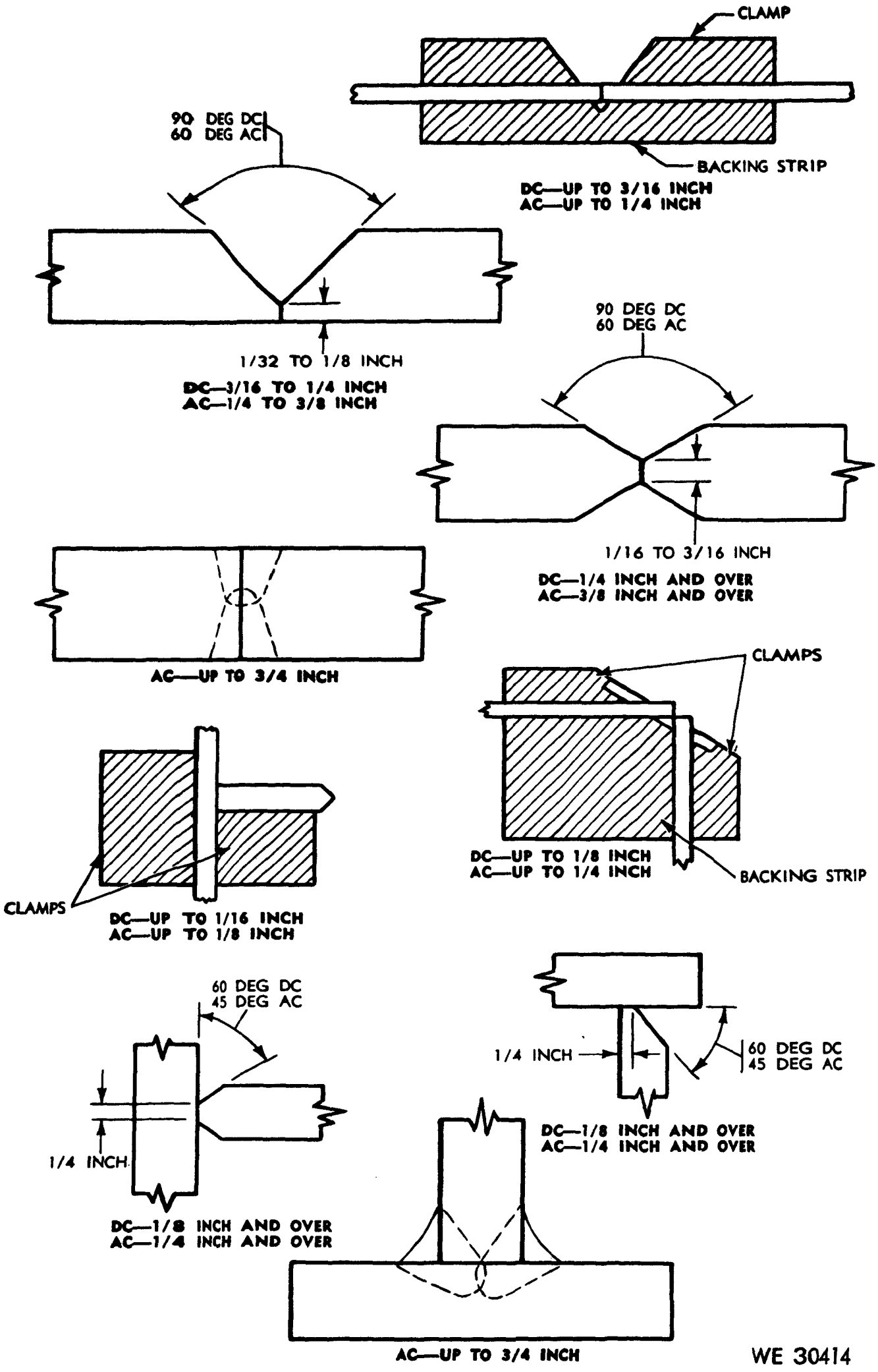

Figure 7–33. Joint preparation for arc welding magnesium.

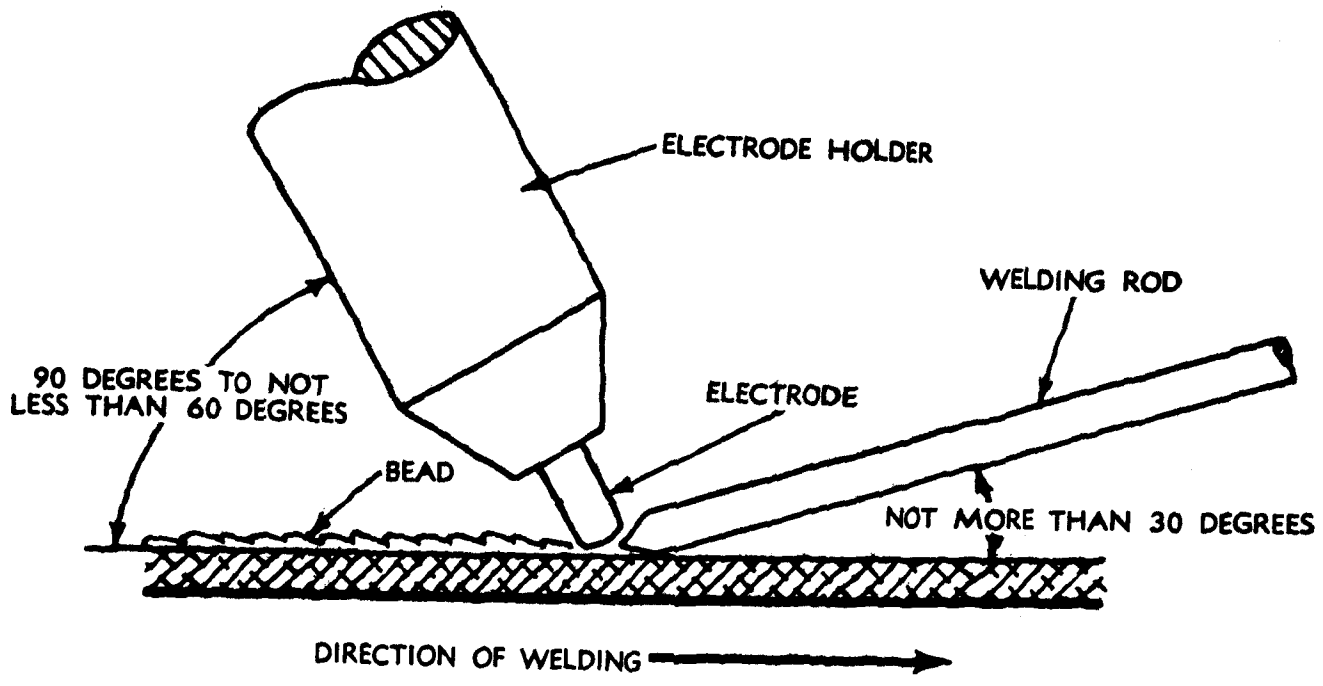

Figure 7–34. Position of torch and welding rod.

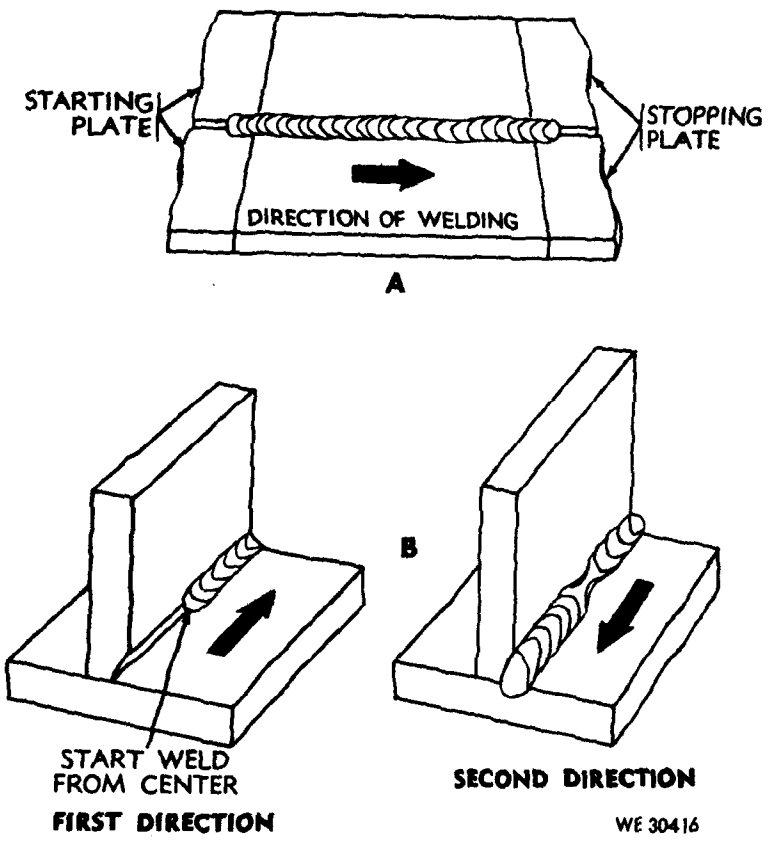

Figure 7–35. Minimizing cracking during welding.

satisfactory for welding titanium and titanium alloys include inert-gas-shielded metal-are welding and spot, seam, flash welding, and pressure welding. All of these processes provide for shielding of the molten weld metal and heat affected zones that would be affected by active elements. Prior to welding, titanium and its alloys should be free of all scale and other material that might cause weld contamination.

b. *Surface Preparation.*

(1) Surface cleaning is important in preparing titanium and its alloys for welding. Proper surface cleaning prior to welding reduces contamination of the weld due to surface scale or other foreign materials.

(2) Several cleaning procedures are used, depending on the surface condition of the base and filler metals. Surface conditions most often encountered are as follows:

(a) Scale free (as received from the mill).

(b) Light scale (after hot forming or annealing at intermediate temperature; i.e., less than 1, 300 deg F.).

(c) Heavy scale (after hot forming, annealing, or forging at high temperature).

(3) Metals that are scale free can be cleaned by simple degreasing.

(4) Metals with light oxide scale should be cleaned by acid pickling. In order to minimize hydrogen pickup, pickling solutions for this operation should have a nitric acid concentration greater than 20 percent. Metals to be welded should be pickled for 1 to 20 minutes at a bath temperature from 80 to 160 deg F.

After pickling, the parts are rinsed in hot water.

(5) Metals with a heavy scale should be cleaned with sand, grit, or vaporblasting, molten sodium hydride salt baths, or molten caustic baths. Sand, grit, or vaporblasting is preferred where applicable. Hydrogen pickup may occur with molten-bath treatments, but it can be minimized by controlling the bath temperature and pickling time. Bath temperature should be held at about 750 to 850 deg F. Parts should not be pickled any longer than necessary to remove scale. After heavy scale is removed, the metal should be pickled as described in (4) above.

(6) Surfaces of metals that have undergone oxy-acetylene flame cutting operations have a very heavy scale and may contain micro cracks due to excessive contamination or the metallurgical characteristics of the alloys. The best cleaning method for flame cut surfaces is to remove the contaminated layer and any cracks that may be present by machining operations. Certain alloys can be stress-relieved immediately after cutting to prevent the propagation of these cracks into the heat affected base metal. This stress relief is usually made in conjunction with the cutting operation.

c. *Inert-Gas-Shielded Metal-Arc Welding.* Both the nonconsumable and consumable electrode inert-gas-shielded metal-arc welding processes are used to weld titanium and titanium alloys. They are satisfactory for manual and automatic installations. With these processes, contamination of the molten weld metals and adjacent heated zones is minimized by shielding the arc and the root of the weld with inert gases ((1)(b) below) or special backing bars ((1)(c)*10* below). In some cases, inert-gas-filled welding chambers (2) below are used to provide the required shielding.

(1) *SHIELDING.*

(A) *GENERAL.* Very good shielding conditions are necessary to produce arc welded joints with maximum ductility and toughness. To obtain these conditions, the amount of air or other active gases which contact the molten weld metals and adjacent heated zones must be very low.

(B) *INERT GASES.* Both helium and argon are used as shielding gases. With helium as the shielding gas higher welding speeds and better penetration are obtained than with argon, but the arc is more stable in argon. For "open-air" welding operations, most persons prefer argon as the shielding gas because its density is greater than that of air. Mixtures of argon and helium also are used. With mixtures, the arc characteristics of both helium and argon are obtained. The mixtures usually vary in composition from about 20 to 80 percent argon. They often are used with the consumable-electrode process. To provide adequate shielding for the face and root sides of welds, special precautions often are taken. The precautions include the use of screens, baffles ((c)*8* below), trailing shields ((c)*7* below), and special backing fixtures (c)*10* below) in open-air welding, and the use of inert-gas-filled welding chambers.

(C) *OPEN AIR WELDING.*

1. In open air welding operations, the methods used to shield the face of the weld vary with joint design, welding conditions and the thickness of the materials being joined. The most critical area in regard to the shielding is the molten weld puddle. Impurities diffuse into the molten metal very rapidly and remain in solution. The gas flowing through a standard welding torch is sufficient to shield the molten zone. Because of the low thermal conductivity of titanium however, the molten puddle tends to be larger than most metals. For this reason and because of shielding conditions required in welding titanium, larger nozzles are used on the welding torch, with proportionally higher gas flows than are required for other metals. Chill bars often are used to limit the size of the puddle.

2. The primary sources of contamination in the molten weld puddle are turbulence in the gas flow from the welding torch, oxidation of hot filler rods, insufficient gas flow, small nozzles on the welding torch, and impure shielding gases. The latter three sources may be easily controlled.

3. If turbulence occurs in the gas flowing from the torch, air will be inspired and contamination will result. Turbulence is generally caused by excessive amounts of gas flowing through the torch, long arc lengths,

air currents blowing across the weld, and joint design. Contamination from this source can be minimized by adjusting gas flows and arc lengths and by placing baffles alongside the welds. Baffles protect the weld from drafts and tend to retard the flow of shielding gas from the joint area. Chill bars or the clamping toes of the welding jig can serve as baffles (fig. 7–36). Baffles are especially important for making corner type welds. Additional precautions can be taken to protect the operation from drafts and turbulence by erecting a canvas (or other suitable material) screen around the work area.

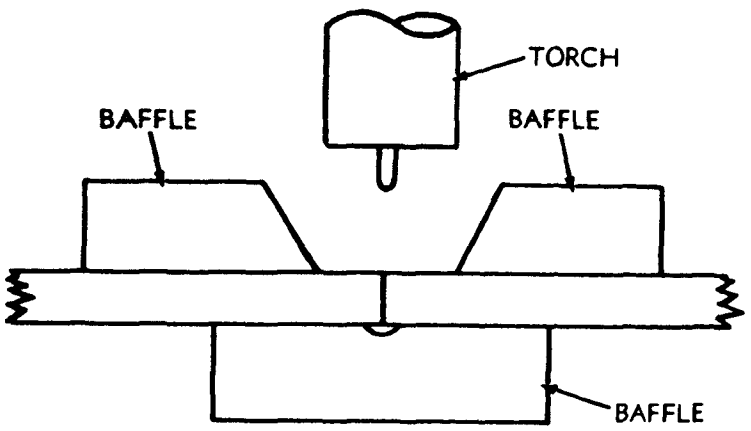

Figure 7–36. Baffle arrangements to improve shielding.

4. In manual welding operations with the tungsten-arc process, oxidation of the hot filler metal is a very important source of contamination. To control it, the hot end of the filler wire must be kept within the gas shield of the welding torch. Welding operators must be trained to keep the filler wire shielded when welding titanium and its alloys. Even with proper manipulation, however, contamination from this source probably cannot be eliminated completely.

5. Weld contamination which occurs in the molten weld puddle is especially hazardous because the impurities go into solution and do not cause discoloration. Although discolored welds may have been improperly shielded while molten, weld discoloration is caused by contamination which occurs after the weld has solidified.

6. Most of the auxiliary equipment used on torches to weld titanium is designed to improve shielding conditions for the welds as they solidify and cool. However, if the welding heat input is low and the welds cool to temperatures below about 1,200 to 1,000 deg F. while they are shielded by the gas flowing from the welding torch, auxiliary shielding equipment is not required. If the welds are at excessively high temperatures after they are no longer shielded by the welding torch, then auxiliary shielding should be supplied.

7. Trailing shields often are used to supply auxiliary shielding. These shields extend behind the welding torch and vary considerably in size, shape, and design. Sometimes they are incorporated into special cups which are used on the welding torch or consist only of tubes or hoses attached to the torch or manipulated by hand to direct a stream of inert-gas on the welds. Figure 7–37 shows a drawing of one type of trailing shield currently in use. Important features of this shield are that the porous diffusion plate allows an even flow of gas over the shield area and prevents turbulence in the gas stream; and the shield fits the torch so that a continuous gas stream between the torch and shield is obtained.

8. Baffles also are beneficial in improving shielding conditions for welds by retarding the flow of shielding gas from the joint area. Baffles may be placed alongside the weld, over the top, or at the ends of the weld. In some instances, they may actually form a chamber around the arc and molten weld pud-

dle. Also, chill bars may be used to increase weld cooling rates and may make auxiliary shielding unnecessary.

9. Very little difficulty has been encountered in shielding the face of welds in automatic welding operations. However, considerable difficulty has been encountered in manual operations.

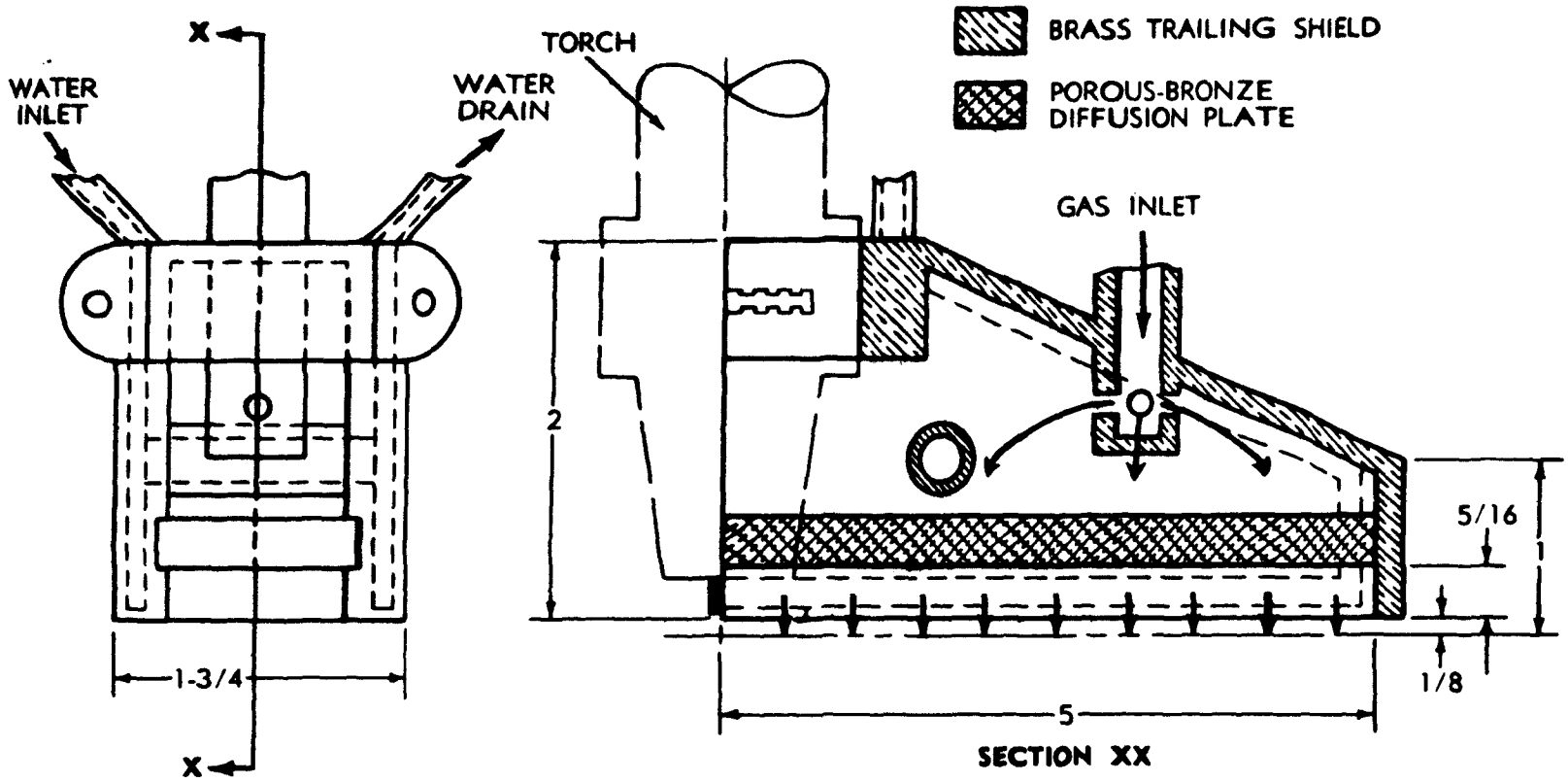

Figure 7–37. Trailing shield.

10. In open air welding operations, means must be provided for shielding the root or back of the welds. Backing fixtures often are for this purpose. In one type, an auxiliary supply of inert-gas is provided to shield the back of the weld. In the other, a solid or grooved backing bar fits tightly against the back of the weld and provides the required shielding. Fixtures which provide an inert-gas shield are preferred, especially in manual welding operations with low welding speeds. Figure 7–38 shows backing fixtures used in butt welding flat heavy plate and thin sheet respectively. Similar types of fixtures are used for other joint designs. However, the design of the fixtures varies with the design of the joints. For fillet welds on tee joints, shielding should be supplied for two sides of the weld in addition to shielding the face of the weld.

11. For some applications, it may be easier to inclose the back of the weld, as in a tank, and supply inert gas for shielding purposes. This method is necessary in welding tanks, tubes, or other inclosed structures where access to the back of the weld is not possible. Also, in some weldments, it may be necessary to machine holes or grooves in the structures in order to provide shielding gas for the back or roof of the welds.

12. The development of a pliable or flexible backing fixture would be beneficial to titanium welding operations. This type of fixture could be used on curved or irregularly shaped surfaces, as the application required, and also would fit properly as the weld distorted or expanded during the welding operation. In circumferential welds, distortion may result in a loose fitup between the material being welded, and the backing fixture. This condition may cause excessive weld contamination. One method of overcoming this problem is to use backing fixtures that will provide an inert-gas shield

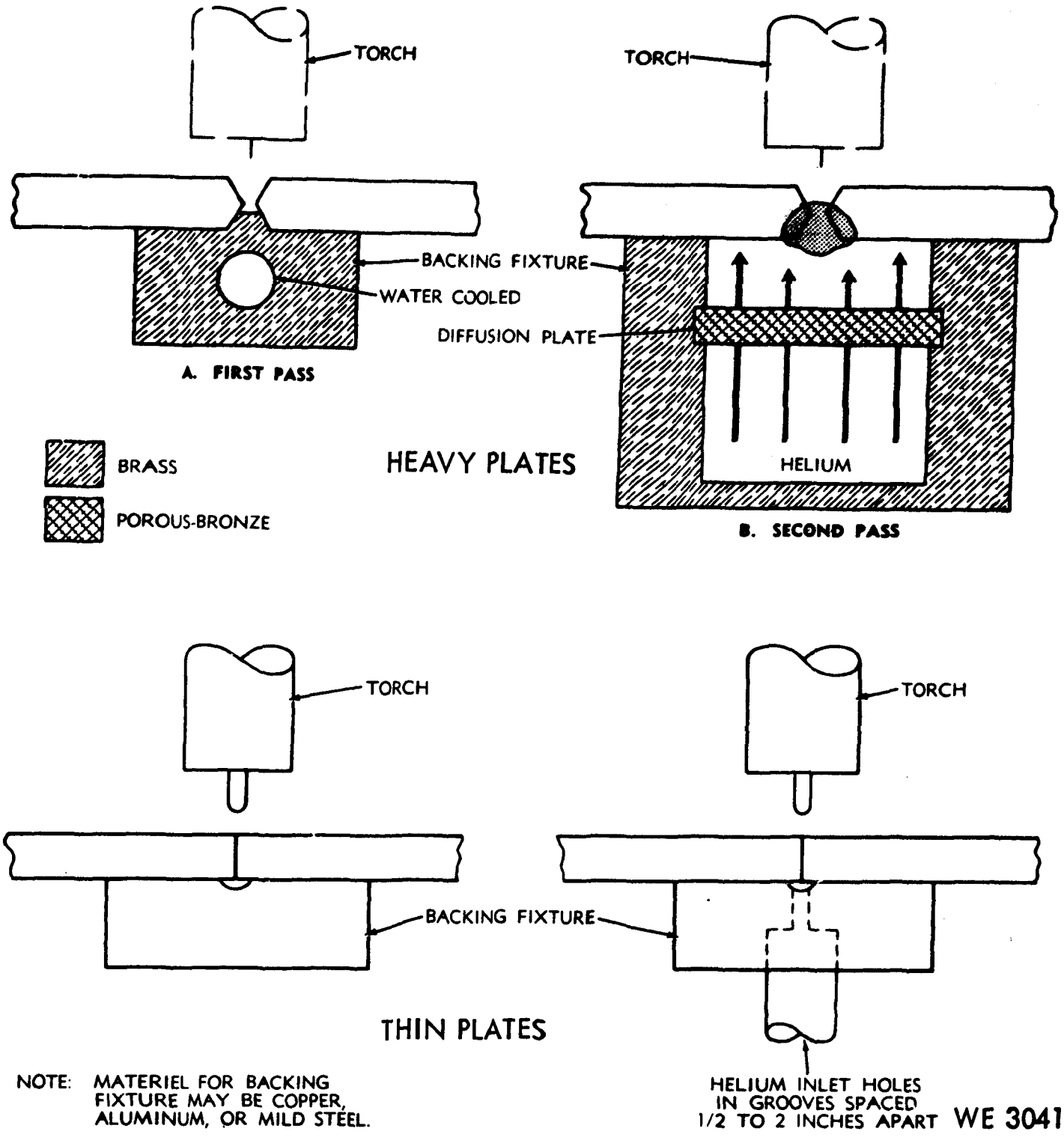

Figure 7–38. Backing fixtures for butt welding heavy plate and thin sheet.

for the weld, even when there is a gap between the backing fixture and metal being welded. This type of backing fixture for heavy plates, shown in figure 7–38, will work in this manner. Also, a flexible backing fixture which would conform to the weld as it distorts would overcome this problem.

13. Bend or notch toughness tests are the best methods for evaluating shielding conditions, but visual inspection of the weld surface, which is not an infallible method, is the only nondestructive means for evaluating weld quality at the present time. With this method, the presence of a heavy gray scale with a nonmetallic luster on the weld head indicates that the weld has been contaminated badly and has low ductility. Also, the weld surface may be shiny but have different colors, ranging from grayish blue to violet to brown. This type of discoloration may be found on severely con-

taminated welds or may be due only to surface contamination, the weld may be satisfactory. However, the quality of the weld cannot be determined without a destructive test. With good shielding procedures, weld surfaces are shiny and show no discoloration. However, if the weld is improperly shielded in the high-temperature zone around the arc and adequately weld with a shiny surface can be produced.

(2) *WELDING CHAMBERS.*

(a) For some applications, inert-gas filled welding chambers are used. The advantage of using such chambers is that good shielding may be obtained for the root and face of the weld without the use of special fixtures. Also, the surface appearance of such welds is a fairly reliable measure of shielding conditions. The use of chambers is especially advantageous when complex joints are being welded. However, chambers are not required for many applications and their use may be limited.

(b) Welding chambers vary in size and shape, depending on their use and the size of assemblies to be welded. The inert atmospheres may be obtained by evacuating the chamber and filling it with helium or argon, purging the chamber with inert gas, and collapsing the chamber to expel air and refilling it with an inert gas. Plastic bags have been used in this latter manner. When the atmospheres are obtained by purging or collapsing the chambers, inert gas usually is supplied through the welding torch to insure complete protection of the welds.

(3) *JOINT DESIGNS.* Joint designs for titanium are about the same as those used for other metals. For welding a thin sheet, the tungsten-arc process generally is used. With this process, butt welds may be made with or without filler rod, depending on the thickness of the joint and fitup. Special shearing procedures sometimes are used so that the root opening does not exceed 8 percent of the sheet thickness. If fitup is this good, filler rod is not required. If fitup is not this good, filler metal is added to obtain full-thickness joints. In welding thicker sheet (greater than 0.090-inch), both the tungsten-arc and consumable electrode processes are used with a root opening. For welding titanium plates, bars, or forgings, both the tungsten-arc and consumable-electrode processes also are used with single and double V joints. In all cases, good weld penetration may be obtained without excessive "drop-through". However, penetration and drop-through are controlled more easily by the use of proper backing fixtures.

Note. **Because of the low thermal conductivity of titanium, weld beads tend to be wider than normal. However, the width of the beads is generally controlled by using short arc lengths or by placing chill bars or the clamping toes of the jig close to the sides of the joints.**

(4) *WELDING VARIABLES.*

(a) Welding speed and current for titanium alloys depend on the process used, shielding gas, thickness of the material being welded, design of the backing fixtures, and the spacing of chill bars or hold down bars in the welding jig. Welding speeds vary from about 3 to 40 inches per minute. The highest welding speeds are obtained with the consumable-electrode process. In most cases, direct current is used with straight polarity for the tungsten-arc process and reverse polarity for the consumable-electrode process.

(b) "Arc wander" has proved troublesome in some automatic welding operations. With arc wander, the arc from the tungsten or consumable electrode moves from one side of the weld joint to the other side and a straight, uniform weld bead is not produced. Arc wander is believed to be caused by magnetic disturbances, bends in the filler wire, coatings on the filler wire, or a combination of these. Special metal shields and wire straighteners have been used to overcome arc wander, but they have not been completely satisfactory. Also, constant-potential welding machines have been used in an attempt to overcome this problem. These machines also have not been completely satisfactory.

(c) In setting up arc-welding operations for titanium, the welding conditions should be evaluated on the basis of weld-joint properties and appearance. Radiographs will show if porosity or cracking is present in the weld joint. A simple bend test or notch-toughness test will show whether or not the shielding conditions are adequate, and a visual examina-

tion of the weld will show if the weld penetration and contour are satisfactory. After adequate procedures are established, careful controls are desirable to insure that the shielding conditions are not changed.

(5) *WELD DEFECTS.*

(a) *General.* Defects in arc-welded joints in titanium alloys consist mainly of porosity ((b) below) and cold cracks ((c) below). Weld penetration can be controlled by adjusting welding conditions.

(b) *Porosity.* Weld porosity is rapidly becoming a major problem in arc welding titanium alloys. Although acceptable limits for porosity in arc welded joints have not been established, porosity has been observed in tungsten-arc welds in practically all of the alloys which appear suitable for welding operations. It does not extend to the surface of the weld but has been detected in radiographs. It usually occurs close to the fusion line of the welds. Weld porosity may be reduced by agitating the molten weld puddle and adjusting welding speeds. Also, remelting the weld will eliminate some of the porosity present after the first pass. However, the latter method of reducing weld porosity tends to increase weld contamination.

(c) *Cracks*

1. With adequate shielding procedures and suitable alloys, cracks should not be a problem. However, cracks have been troublesome in welding some alloys. Weld cracks are attributed to a number of causes. In commercially pure titanium, weld-metal cracks are believed to be caused by excessive oxygen or nitrogen contamination. These cracks are observed usually in weld craters. In some of the alpha-beta alloys, transverse cracks in the weld metal and heat-affected zones are believed to be due to the low ductility of the weld zones. However, cracks in these alloys also may be due to contamination. Cracks also have been observed in alpha-beta welds made under restraint and with high external stresses. These cracks are sometimes attributed to the hydrogen content of the alloys.

Note. **If weld cracking is due to contamination, it may be controlled by improving shielding conditions. However, repair welding on excessively contaminated welds is not practical in many cases.**

2. Cracks which are caused by the low ductility of welds in alpha-beta alloys can be prevented by heat treating or stress relieving the weldment in a furnace immediately after welding. Oxy-acetylene torches also have been used for this purpose. However, care must be taken so that the weldment is not overheated or excessively contaminated by the torch heating operation.

3. Cracks due to hydrogen may be prevented by vacuum-annealing treatments prior to welding.

(6) *Availability of Welding Filler Wire.* Most of the titanium alloys which are being used in arc welding applications are available as wire for welding filler metal. These alloys are listed below:

(a) Commercially pure titanium—commercially available as wire.

(b) Ti–5A1–2–1/2Sn alloy—commercially available as wire.

(c) Ti–1–1/2A1–3Mn alloy—available as wire in experimental quantities.

(d) Ti–6A1–4V alloy—available as wire in experimental quantities.

There has not been a great deal of need for the other alloys as welding filler wires. However, if such a need should occur, most of these alloys also could be reduced to wire. In fact, the Ti 8Mn alloy has been furnished as welding wire to meet some requests.

d. *Pressure Welding.* Solid-phase or pressure welding has been used to join titanium and titanium alloys. In these processes, the surfaces to be joined are not melted, but they are held together under pressure and heated to elevated temperatures (900 to 2,000 deg F.). One method of heating used in pressure welding is by an oxy-acetylene flame. With suitable pressure and upset, good welds are obtainable in the high strength alpha-beta titanium alloys with this method. The contaminated area on the surface of the weld is displaced from the joint area by the upset which occurs during welding. This contaminated surface is machined off after welding. Another method of heating is by heated dies. Strong lap joints are obtained with this method in commercially pure titanium and a high strength alpha-beta alloy. By heat-

ing in this manner, welds may be made in very short periods of time and inert-gas shielding may be supplied to the joints. With all of the heating methods, less than 2 minutes is required to complete the welding operation. With solid phase or pressure welding processes, it is possible to produce ductile welds in the high strength alpha-beta alloys by using temperatures which do not cause embrittlement in these alloys.

7–25. Nickel and Monel Welding

a. *General.* Nickel and nickel alloys such as monel can, in general, be welded by employment of the usual metal arc welding methods used for welding of carbon steels. Some nickel alloys are more difficult to weld due to the different composition. It is, therefore, suggested that the operator make trial welds with reversed polarity at several current values and select the one best suited for the work. Generally the oxy-acetylene welding methods for smaller plates are preferred; however, small plates can be welded by the metal arc and carbon arc processes and large plates are most satisfactorily joined, especially if the plate is nickel clad steel.

b. *Joint Design.* Butt joints are preferred but corner and lap joints can be effectively welded. Beveling is not required on plates $1/16$ to $1/8$-inch thick. With thicker materials a bevel angle of 35 to $37\frac{1}{2}$ deg should be made. In welding lap joints the weld should be made entirely with nickel electrodes if water or air tightness is required.

c. *Welding Techniques.*

(1) Clean all surfaces to be welded either mechanically by machining, sandblasting, grinding, or with abrasive cloth; or chemically by pickling.

(2) Plates hvaing U or V joints should be assembled, and if nickel clad steel, should be tacked on the steel side, to prevent warping and distortion, and after it is determined that the joint is even and flat, complete the weld on the steel side. Chip out and clean the nickel side and weld. If the base metal on both sides are nickel, clean out the groove on the unwelded side prior to commencing the weld on that side.

(3) If desired, the nickel side may be completed first. However, the steel side must be tacked and thoroughly cleaned and beveled (or gouged) down to the root of the nickel weld prior to welding.

(4) Lap and corner joints are sucessfully welded by depositing a bead of nickel metal into the root and then weaving successive beads over the root weld.

(5) The arc drawn for nickel or nickel alloy welding should be slightly shorter than that used in normal metal arc welding. A $1/16$ to $1/8$-inch arc is a necessity.

(6) Any position weld can be accomplished that can be satisfactorily welded by normal metal arc welding of steel.

Section V. CUTTING AND HARD SURFACING WITH THE ELECTRIC-ARC

7–26. General

a. *Cutting.* Electric-arc cutting is a melting process whereby the heat of the electric arc is used to melt the metal along the desired line of the cut. The quality of the cuts produced by arc cutting does not equal that of cuts produced by applications where smooth cuts are not essential. Arc cutting is generally confined to the cutting of nonferrous metals and cast iron.

b. *Hard Surfacing.* Hard surfacing is the process of applying extremely hard alloys to the surface of a softer metal to increase its resistance to wear by abrasion, corrosion, or impact. The wearing surfaces of drills, bits, cutters, or other parts when treated with these special alloys will outwear ordinary steel parts from 2 to 25 times, depending on the hard surfacing alloy and the service to which the art is subjected.

7–27. Metal Cutting With Electric-Arc

a. *General.* Electric-arc cutting can be performed by three methods: carbon-arc, metal-arc, and arc-oxygen cutting.

b. *Carbon-Arc Cutting.* In carbon-arc cutting, a carbon electrode is utilized to melt the metal progressively by maintaining a steady arc length and a uniform cutting speed. Direct current, straight polarity if preferred, because it develops a higher heat at the base metal, which is the positive pole. Direct current also permits a higher cutting rate than alternating current, with easier control of the arc. Air cooled carbon electrode holders are used for currents up to 300 amperes. Water cooled electrode holders are desirable for currents in excess of 300 amperes.

c. *Metal-Arc Cutting.*

(1) *ARC-OXYGEN.* Metal-arc cutting is a progressive operation with a low carbon steel, covered electrode. The covering on the electrode is a nonconducting refractory material and permits the electrode to be inserted into the gap of the cut without being short circuited. This insulating coating also stabilizes and intensifies the action of the arc. Direct current, straight polarity is preferred but alternating current can be used. Standard electrode holders are applicable for metal-arc cutting in air.

(2) *AIR-ARC.* By slightly converting the standard electrode holder, as described in TB 9–3439–203/1, a stream of air can be directed to the surface of the work increasing the speed of the cut and holding it to a minimum width.

(3) *UNDERWATER CUTTING.* Specially constructed, fully insulated holders must be used for underwater metal-arc cutting (see section V of this chapter).

d. *Arc-Oxygen Cutting.* Arc-oxygen cutting is a progressive operation in which a tubular electrode is employed. The steel or conducting-type ceramic is used to maintain the arc and also serves as a conduit through which oxygen is fed into the cut. In this process the arc provides the heat and the oxygen reacts with the metal in the same manner as in oxy-acetylene cutting (par. 6–40). Both direct and alternating currents are applicable in this process.

7–28. Hard Surfacing

Hard surfacing is used to apply a layer of metal of a special composition onto the surface or to a specific section or part of a base metal of another composition. A wide variety of characteristics or performance characteristics can be secured by the selection of proper surfacing metals. The applied layer may be as thin as $^1/_{32}$-inch or as thick as required.

7–29. Metals That Con Be Hard Surfaced

a. All plain carbon steels with carbon content up to 0.50 percent can be hard surfaced by either the oxy-acetylene or electric-arc process.

b. High carbon steels containing more than 0.50 percent carbon can be hard surfaced by any of the arc-welding processes but preheating to from 300 to 600 deg F., is usually advisable. This preheating will prevent cracking due to sudden heating of hardened parts and will prevent excessive hardening and cracking of the heat affected zone during cooling.

c. Low alloy steels can be hard surfaced in the same manner as plain carbon steels of the same hardening ability if the steel is not in its hardened state. If it is in the hardened state, it should be annealed before welding. In some cases, heat treatment is required after welding.

d. The hard surfacing of high speed steels is not generally recommended. This is due to the fact that, regardless of heat treatment, brittleness and shrinkage, cracks will develop in the base metal after hard surfacing. Usually there is no need for hard-surfacing these steels because surfaced parts of low alloy steels should provide equal service characteristics.

e. Manganese (Hadfield) steels should be hard-surfaced by the shielded metal-arc process only and with the work hardening type of alloys or with alloys that will bond easily with this metal.

f. Stainless steels, including the high chromium and the 18–8 chrome-nickel steels, can be hard surfaced with most of the alloys that have suitable melting points. A knowledge of the composition of the stainless steel in hand is needed for the selection of the proper alloy, otherwise brittleness or impairment of the corrosion resistant may result. The high coefficient of expansion of the 18–8 steels must also be considered.

g. Gray and alloy cast irons can be surface

hardened with the lower melting point alloys and the austenitic alloys if precautions are taken to prevent cracking of the casting iron during and after welding. Cobalt base alloys are also applicable to cast iron, although a flux may be required. Nickel, copper, and bronze alloys are readily applied to cast iron.

h. White cast iron cannot be successfully surfaced because the welding heat materially alters the properties of the underlying metal.

i. Malleable iron can be surfaced in the same manner as cast iron.

j. Copper, brass, and bronze are difficult to surface with ferrous or high alloy nonferrous metals because of their low melting points. However, brass, bronze, and some nickel surfacing alloys can be applied very readily. Fluxes are usually needed in these applications to secure sound welds.

7–30. Alloys Used For Hard Surfacing

a. *General.* No single hard surfacing material is suitable for all applications. Many types of hard surfacing alloys have been developed to meet the various requirements for hardness, toughness, shock and wear resistance, and other special qualities. These alloys are classified into seven groups.

b. *Group A.* This includes the low alloy types of surfacing alloys that are air hardened. Most of these electrodes are covered with coatings that supply alloying, deoxidizing, and arc stablizing elements. Preheating of the base metal may be necessary to prevent cracking when harder types of electrodes are used, but in many applications the presence of small cracks is not important.

c. *Group B.* These electrodes include the medium alloy and medium-high alloy types. They have a light coating or arc stabilization only. The alloying agents are in the metal of the rod or wire. The electrodes in this group have a lower melting point than those in group A. They produce a flatter surface and must be used in the flat position only. Multilayer deposits, with proper preheat, should be free from cracks.

d. *Group C.* These electrodes include the high speed steel and so-called austenitic steel alloys (other than austenitic-manganese steels. The electrodes are either bare or have a light arc stabilizing coating. The bare electrodes should be used for surfacing manganese steels only because their arc characteristics are poor. The base metal must not be heated over 700 deg F., to avoid embrittlement of the weld metal, which has low heat conductivity. Peening is used in the application of these alloys to reduce stresses and to induce some hardness in the underlying layers.

f. *Group E.* These electrodes include the cobalt base alloys. They have a moderately heavy coating and are intended for manual welding only. Low welding heat is recommended to avoid impairment of metal properties. Deposits are subject to cracking but this can be prevented by preheating and slow cooling of the workpiece.

g. *Group F.* These alloys are supplied as tube rods containing granular tungsten carbide inside the tube. Their arc characteristics are poor but porosity and cracks are of little importance in the application for which they are intended. The tungsten carbide (granules) must not be melted or dissolved in the steel and, for this reason, a minimum heat is recommended for welding. The deposits should show a considerable amount of undissolved carbide particles.

h. *Group G.* These are the nonferrous alloys of copper and nickel base types. They are heavily coated and are intended for direct current, reverse polarity welding in the flat position only.

7–31. Hard Surfacing Procedure

a. *Preparation of Surface.* The surface of the metal to be hard surfaced must be cleaned of all scale, rust, dirt, or other foreign substances by grinding, machining, or chipping. If these methods are not practicable, the surface may be prepared by filing, wire brushing, or sandblasting. These latter methods sometimes leave scale or other foreign matter which must be floated out during the surfacing operation. All edges of grooves, corners, or recesses must be well rounded to prevent overheating of the base metal.

b. *Hard Surfacing With the Metal-Arc.* Surfacing by arc welding is done in the same manner and is similar in principle to joining

by arc welding, except that the added metal has a composition that is not the same as that of the base metal. The characteristics of the added metal would be changed or impaired if it was excessively diluted by or blended with the base metal. For this reason, penetration into the base metal should be restricted by applying the surfacing metal with the minimum welding heat. In general, the current, voltage, polarity, and other conditions recommended by the manufacturer of the electrodes are based on this factor. An arc as long as possible will give the best results.

c. *Hard Surfacing With the Carbon-Arc.* This process is used principally for the application of group F (par. 7–30) alloys. The welding machine is set for straight polarity and the heat of the arc is used to weld the particles of carbide to the surface of the base metal.

Section VI. UNDER WATER CUTTING AND WELDING WITH THE ELECTRIC-ARC

7–32. General

a. *Underwater Arc Cutting.* In many respects underwater arc cutting is quite similar to underwater arc cutting is quite similar to underwater gas cutting inasmuch as an outside jet of oxygen and compressed air is needed to keep the water from the vicinity of the metal being cut. Arc torches for underwater cutting are produced in a variety of types and forms and are so constructed to be connected to oxygen-air pressure sources. Electrodes used may be carbon or metal and are usually hollow in order to introduce a jet of oxygen into the molten crater created by the arc. Current practice is to utilize direct current for all underwater cutting and welding, and in all cases the electrode is connected to the negative side of the welding generator.

b. *Underwater Arc Welding.* Underwater arc welding may be accomplished in much the same manner as ordinary arc welding is done. The only variations of underwater arc welding to ordinary arc welding is that the electrode holder and cable must be well insulated to reduce current leakage and electrolysis and the coated electrodes must be waterproofed so that the coating will not disintegrate underwater. The waterproofing for the electrode is generally a cellulose nitrate in which celluloid has been dissolved, ordinary airplane "dope" to which has been added 2 pounds of celluloid per gallon will prove satisfactory.

Warning: **Safety precautions must be exercised in underwater cutting and welding. Electrode holder and cable must be insulated, current shut off when changing electrodes, and diver should avoid contact between electrode and grounded work.**

7–33. Underwater Cutting Technique

a. Steel electrodes used for underwater cutting should be 14-inches long with $^5/_{16}$-inch outside diameter with an approximate 0.112-inch inside diameter hole. The electrode should have an extruded flux coating and be thoroughly waterproofed for underwater work. Welding current of 275 to 400 amps gives the best results with steel electrodes. When using graphite or carbon electrodes, 600 to 700 amps are required with a voltage setting around 70.

b. When working underwater, the cut is started by placing the tip of the electrode in contact with the work, depressing the oxygen lever slightly and then calling for current. When the arc is established, the predetermined oxygen pressure (c. below) is released and the metal is pierced, the electrode is then kept in continous contact with the work, cutting at the greatest speed at which complete penetration can be maintained. The electrode should be held at an angle of 90 deg to the work. When the electrode is consumed, the current is turned off, a new electrode inserted, and the same procedure is repeated until the cut is finished.

c. Normal predetermined pressure required for underwater cutting for plate thicknesses is the normal cutting pressure required in ordinary air cutting plus the depth in feet, multiplied by 0.445. As an example, ¼-inch plate in normal air cutting requires 20 psi pressure, therefore, at 10 feet underwater the following results would be reached:

Note. **Allowance for pressure drop in line is 10 to 20 psi per 100 ft of hose.**

7–34. Underwater Welding Technique

a. Direct current must be used for underwater welding and a 400 amp welder will generally have ample capacity. To produce satisfactory welds underwater the voltage must run about 10 volts and the current about 15 amps above those used for ordinary welding.

b. The procedure recommended for underwater welding is simply a touch technique with the electrode held in light contact with the work so that the crucible formed by the coating at the end of the electrode acts as an arc spacer. To produce ½-inch of weld bead per 1-inch of electrode consumed in "tee" or lap welding, the electrode is held at approximately 45 deg to the line of travel and at an angle of about 45 deg to the surface being welded. To increase or decrease weld size, the lead angle may be decreased or increased. The same procedure applies to welding in any position. No weaving or whipping is employed at any time. In vertical welding, working from the top down is recommended.

The touch technique has these advantages:

(1) Makes travel speed easy to control.

(2) Produces uniform weld surfaces almost automatically.

(3) Provides good arc stability.

(4) Permits diver to feel his way where visibility is bad or working position is awkward.

(5) Reduces slag inclusions to a minimum.

(6) Assures good penetration.

c. In general, larger electrodes are used in welding underwater than are normally employed. For example, in welding down on a vertical lap weld on ⅛ to 3/16-inch material, where a ⅛ or 5/32-inch electrode would usually be used in the open air, a 7/32 or 3/16-inch electrode is recommended for underwater work because the cooling action of the water freezes the deposit more quickly. Higher deposition rates are also made possible for the same reason. Usually in salvage operations tee and lap joints are used because they are easier to prepare and because they provide a natural groove to guide the electrode. These features are important under the difficult working conditions encountered underwater. Slag is light and has such nonadhering qualities that the turbulence of the water is generally sufficient to remove it and the use of cleaning tools is not necessary. However, where highest quality multipass welds are required, each pass should be thoroughly cleaned before depositing the next.

Amperages given in table 21 below are for depths up to 50 ft. As depth increases, amperage must be raised 13 to 15-percent for each additional 50 ft. For example, the 3/16-inch electrode at 200 ft will require approximately 325 amperes to assure proper arc stability.

Table 21. Recommended Welding Currents

Electrode Diameter	Amperes	Arc Volts
1/8-inch	130–163	23–26
5/32-inch	180–225	24–28
3/16-inch	225–280	25–30
7/32-inch	260–340	26–30
¼-inch	330–400	28–32

CHAPTER 8

OTHER WELDING PROCESSES

Section I. GENERAL

8–1. Scope

a. This section contains welding operations for the joining of ferrous and nonferrous metals by use of tools and equipment designed for specific welding procedures.

b. Tools and equipment used in welding by methods other than the oxy-acetylene torch and metal–arc electrode are described in Sections IV through VI of Chapter 5. Welding procedures possible by use of tools and equipment are listed below:

(1) Resistance Welding
(2) Thermit Welding
(3) Forge Welding

8–2. Welding Equipment

a. *Resistance Welding.* Spot, seams, upset, and flash welding is performed by a machine or machines which are mounted in a fixed position and are generally used in production line capacity, see section IV, chapter 5.

b. *Thermit Welding.* Thermit welding requires the utilization of crucible and mold as well as cranes and other equipment to handle molten metals. A general description of this type equipment is outlined in section V, chapter 5.

c. *Forge Welding.* Forge welding is a form of pressure welding by use of repeated blows applied to molten metal to upset and join two plates into a single plate. Tools and equipment required for this type welding are described in section VI, chapter 5.

Section II. RESISTANCE WELDING

8–3. General

Resistance welding is a type of welding process in which the work pieces are heated by the passage of an electric current through the contact. Such processes include spot welding seam welding, and percussion welding.

8–4. Resistance Welding Process

a. *Projection Welding.* This is defined as a process wherein coalescence is produced by the heat obtained from resistance to the flow of electric current through the work parts held together under pressure by electrodes. The resulting welds are localized at predetermined points by the design of the parts to be welded. This localization is usually accomplished by projections, embossments, or intersections. A method of localization is illustrated in figure 5–29. This process is commonly used in the assembly of punched, formed, and stamped parts.

b. *Seam Welding.* This is a resistance-welding process wherein coalescence is produced by the heat obtained from resistance to the flow of electric current through the work parts held together under pressure by rotating circular electrodes. The resulting weld is a series of overlapping spot welds made progressively along a joint. Tapped and flanged joints in cans, buckets, tanks, mufflers, etc., are commonly welded by this process.

c. *Spot Welding.* This is a resistance welding process wherein coalescence is produced by the heat obtained from resistance to the flow of electric current through the work parts held

together under pressure by electrodes. The size and shape of the individually formed welds are limited primarily by the size and contour of the electrodes. Spot welding is particularly adaptable to thin sheet-metal construction and has many applications in this type of work. The spot welding principle is illustrated in figure 8–1.

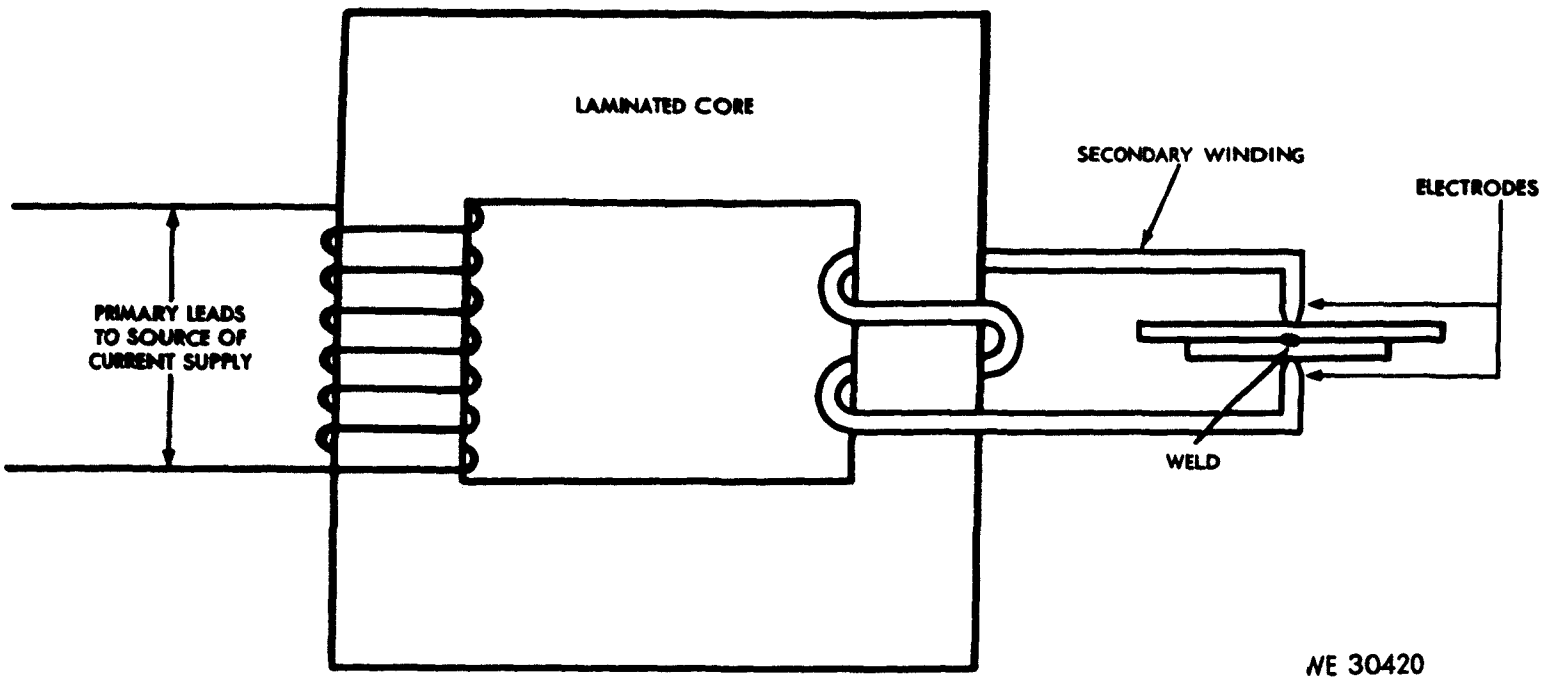

Figure 8–1. Schematic diagram of resistant spot welder.

d. *Roll-Spot Welding.* This is a resistance-welding process wherein separate spot welds are made without retracting the electrodes. This is accomplished by means of circular electrodes in continuous contact with the work.

e. *Upset Welding.* This is a resistance welding process wherein coalescence is produced, simultaneously over the entire area of abutting surfaces or progressively along a joint, by the heat obtained from resistance to the flow of electric current through the area of contact of these surfaces. Pressure is applied before heating is started and is maintained throughout the heating period. Upsetting is accompanied by expulsion of metal from the joint (fig. 8–2).

f. *Flash Welding.* Flash welding is a resistance-welding process wherein coalescence is provided, simultaneously over the entire area of abating surfaces, by the heat obtained from resistance to the flow of electric current between the two surfaces, and by the application of pressure after heating during flashing is substantially completed. Flashing is accomplished by expulsion of metal from the joint (fig. 8–2).

8–5. Welding Procedure

a. The operation of projection, seam, and spot welding involves the use of electric current of proper magnitude for the correct length of time. The current and time factors must be so coordinated that the base metal within a confined area will be raised to its melting point and then resolidified under pressure. The temperature obtained must be sufficient to insure fusion of the base metal elements but not so high that metal will be forced from the weld zone when the pressure is applied.

b. In upset welding (A, fig. 8–2), the surfaces to be welded are brought into close contact under pressure and the welding heat is obtained from resistance to the flow of current through the area of contact of the abuting surfaces. When a temperature sufficiently high is obtained, welding of the surfaces is achieved by upsetting with the application of high pressure.

c. In flash welding (B, fig. 8–2), the fusing of the parts is accomplished in three steps, the surfaces to be joined are brought together under a light pressure, then separated slightly to allow arcing to occur. This small arc brings

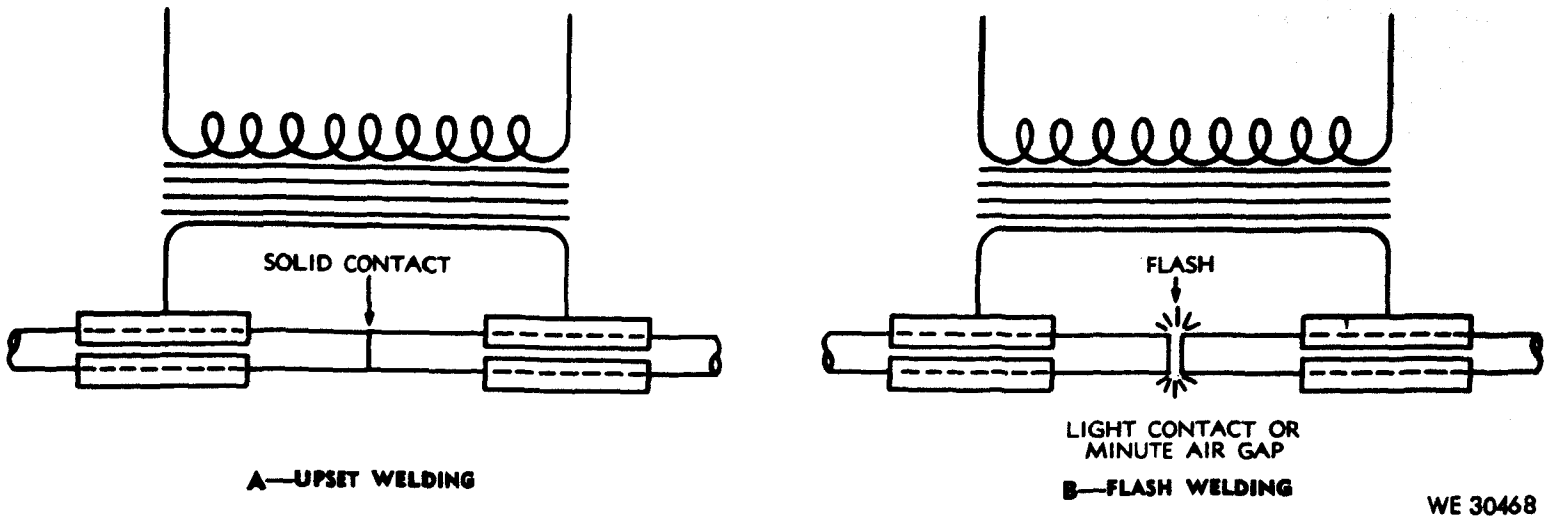

Figure 8–2. Schematic diagram of upset and flash welder.

the metals to their melting points at the separated ends and, as a final operation, the molten surfaces are forced together under heavy pressure. As they meet, the molten metal and slag are thrown out and a clean fusion is obtained.

8–6. Spot Welding Magnesium

a. Magnesium can be joined by spot, seam, or flash welding but spot welding is the most widely used. Spot welding is used mostly on assemblies subject to low stresses and to those not subjected to vibration. The welding of dissimilar alloys by the spot welding process should be avoided, especially if alloys of of markedly different properties.

b. Either alternating current or direct current can be used for spot welding magnesium. High currents and short weld duration are required, and both alternating-current and direct-current spot welders have sufficient capacity and provide the control of current that is necessary in the application of this process.

(1) *ALTERNATING-CURRENT MACHINES.* The alternating-current spot welding machines equipped with electronic synchronous timers, heat control, and phase shifting devices to control weld timing and current are suitable for the welding or magnesium. Three types of machines are used; single-phase, three-phase, and dry-disk rectifier type.

(2) *DIRECT-CURRENT MACHINES.* The electrostatic condenser discharge type is the most widely used direct-current machine for magnesium welding. The line demand for this type of equipment may be as high as 500 kva when welding sheets approximately 0.125 inch thick. Electromagnetic machines are also used. They require lower pressure applied by the electrodes during welding than the electrostatic equipment.

c. Electrodes for spot welding magnesium should be made of highconductivity copper alloys conforming to Resistance Welder Manufacturer's Association specifications. Hard-rolled copper can be used where special offset electrodes are desired. Electrodes should be water-cooled but never to the point where condensation will take place. Intermittent water flow, supplied only when the weld is made, assists in the maintenance of a constant tip temperature. The most common tips are dome ended with tip radii of curvature ranging from 2 to 8 inches, depending on sheet thickness. Four degree flat tips are frequently used. Flat tips with the diameters from $\frac{3}{8}$ to $1\frac{1}{4}$-inches are used on the side of the work where the surface is to be essentially free of marks. Contact surfaces of the electrodes must be kept clean and smooth.

d. Magnesium sheets for spot welding should be purchased with an oil coating rather than a chrome pickle finish. Pickled surfaces are hard to clean for spot welding, because of the surface etch. Satisfactory cleaning can be accomplished by either chemical or mechanical methods. Mechanical cleaning is used where the number of parts to be cleaned does not justify a chemical cleaning setup. Stainless-Steel wool, stainless steel wire brushes, or

aluminum oxide cloth are used for this purpose. Ordinary steel wool and wire brushes leave metallic particles and should not be used, because the magnetic field created in the tip will attract these particles. Chemical cleaning is recommended for high production. It is economical and provides consistently low surface resistance, resulting in more uniform welds and approximately double the number of spot welds between tip cleanings. The allowable time after cleaning and before welding is also much longer. Chemically cleaned parts can be welded up to 100 hours after cleaning, while mechanically cleaned parts should be welded at once.

e. Spot welding is a machine operation requiring accurate current, timing, and welding force and, therefore, the adjustment of the welding machine to the proper setting is the most important step in the production of strong consistent welds. The welding machine manufacturer's operating instructions should be followed closely. Recommended spacing and edge distances are given in table 22.

Table 22. Magnesium Spot Weld Data

B & S gage No.	Spot spacing (in.)	Minimum edge distance (in.)
24	0.50	0.125
18	0.70	0.187
14	1.00	0.250
12	1.25	0.375
8	1.50	0.625

f. Welding pressures are usually established first, using the lower currents or capacitance and voltage values recommended. High pressure provides greater latitude in the currents than can be used for the production of sound welds but may be limited by excessive sheet separation or the size of the electrodes. After approximating the pressure, the proper weld current and weld time or capacitance and voltage should be determined to obtain welds of the desired size and strength. If the maximum weld size is too low or cracking is encountered, it may be necessary to increase the pressure and current, or possibly the weld time. After all the settings are fixed, the hold time may need adjustment to make certain that pressure is maintained on the weld until solidification is complete. Insufficient hold time will result in porous welds and is normally indicated by a cracking sound during the contraction of the weld. Trial welds should be made in material of the same gage, alloy, hardness, and surface preparation as the metal to be welded. Test welds between strips crossed at right angles are useful for determinating proper welding condition, because they can be easily twisted apart.

8–7. Spot and Seam Welding Titanium

a. Spot and seam welding procedures for titanium and titanium alloys are very similar to those used on other metals. Welds can be made over a wide range of conditions and special shielding is not required. The short welding times and proximity of the surfaces being jointed prevent embrittlement of the welds by contamination from the air.

b. The spot and seam welding conditions which have greatest effect on weld quality are welding current and time. With variations in these conditions, the diameter, strength, penetration, and identation of the spot welds change appreciably. Electrode tip radius and electrode force also have some effect on these properties. For all applications, welding conditions should be established depending on the thicknesses being welded and the properties desired.

c. Most experience in spot welding is available from tests on commercially pure titanium. In these tests, the welding conditions have varied considerably, and it is difficult to determine if there are optimum spot welding conditions for various sheet gages. One of the major problems encountered is escessive weld penetration. However, penetration can be controlled by selecting suitable welding current and time.

d. Experience with some of the high strength alpha-beta alloys has shown that post-weld heat treatments are beneficial to spot and seam weld ductility, but procedures have not been developed to heat treat these welds in the machines. When necessary, furnace heat treatments or oxy-acetylene torch may be used to heat treat spot welds.

e. Specification have been established for spot and seam welds in commercially pure titanium. The quality-control measures of these specifications for stainless steel (MIL–W–

6858) is used. Suitable minimum edge distances and spot spacing are listed in table 23. These are the same spot spacings and edge distances specified for spot welds in steel.

*Table 23. Commercially Pure Titanium Spot Weld Data**

B & S gage No.	Spot spacing (in.)	Minimum edge distance (in.)
0.008	0.187	0.125
0.012	0.025	0.125
0.016	0.312	0.187
0.020	0.375	0.187
0.025	0.437	0.025
0.030	0.500	0.250
0.035	0.562	0.250
0.042	0.625	0.312
0.050	0.750	0.312
0.062	0.875	0.312
0.078	1.000	0.312
0.093	1.125	0.375
0.125	1.135	0.500

* Values used when not specified in drawings.

8–8. Flash Welding Titanium

a. Flash-welding procedures for titanium are similar to those used for other metals. As was the case for spot and seam welding (par. 8–7), special shielding is not necessary to produce satisfactory flash welds. However, inert-gas shielding (par. 7–24c(1)b) has been used to decrease the possibility of weld contamination and to increase ductility. For many of the high strength alloys, post weld heat treatments are required to prevent cracking and improve weld ductility. These welds are transferred to a furnace for heat treatment.

b. Flash welding conditions have varied considerably. However, short flashing cycles and fast upset speeds similar to those used for aluminum generally are employed. The upset cycle is probably the most important variable, because of its effect on the expulsion of contaminated metal from the joint. In some of the high strength alpha-beta alloys, superior results were obtained by using intermediate pressures (10,000 to 10,000 psi.)

Note. **High upset pressure result in high residual stresses that may cause the occurence of microfissures in the hard weld zones in these alloys.**

c. An adopted specification requires the tensile strength of the weld area of flash welded joints to be 95 percent minimum of parent metal and elongation through the weld area 50 percent minimum of parent metal. With proper welding procedures and proper postweld heat, treatment for titanium and most of the titanium alloys can be held to these criteria.

Section III. THERMIT WELDING

8–9. General

a. Thermit welding is a group of welding processes wherein coalescence is produced by heating superheated liquid metal and slag resulting from a chemical reaction between a metal oxide and aluminum, with or without the application of pressure. Filler metal, when used, is obtained from the liquid metal.

b. This process makes use of the heat generated by the combination of aluminum and oxygen induced by the ignition of a mixture of 10 parts magnetic iron oxide ($FE_3 O_4$) and 3 parts of finely divided aluminum. This mixture is placed in a refractory-lined crucible and ignited by a highly flammable powder composed mainly of barium peroxide. The reaction is nonexplosive, requires about 30 seconds for completion, and, when the reaction is complete, 7 parts of very hot steel (approximately 4,500 deg F.) are produced. The remainder is aluminum oxide slag. The steel thus formed is nearly 1,600 deg F. higher in temperature than ordinary molten steel. The molten steel is drawn from the crucible and poured into a mold to form the weld (fig. 5–30).

Warning: **In thermit welding, the mold must be thoroughly dried before the charge in the crucible is ignited. When the charge has been ignited, the operator should stand a safe distance away and should wear goggles. Painful burns may occur from the splashing metal, upsetting of the crucible, breaking of the mold, or by allowing the molten metal to come in contact with moisture in the mold.**

8–10. Purpose

The thermit welding process is particularly

useful in welding large sections and in the repair of heavy parts such as railroad rails, connecting rods of locomotives or other large engines, large castings, pipe, and heavy machine frames. It has its limitations, because the molds required to hold the thermit charge are usually complicated and large. Although the principal application of thermit welding has been with the aluminum and iron oxide mixture on steel structures, other metals or their oxides may be included in the thermit mixture. Chromium, nickel, manganese, tungsten, titanium, molybdenum, and cobalt can be used for this purpose. These elements alloy with iron and are used where higher strength, ductility, or hardness are required. They also permit control of the temperature and time of the reaction. Cast iron can be welded with a special thermit mixture.

8–11. Welding Procedure

The thermit metal is poured into the mold through one or more pouring gages, depending on the size of the section to be welded. Sufficient space is allowed for slag to collect and also for risers to form, in order to obtain good distribution of hot metal at the joint. After pouring the mold is allowed to remain in position for several hours, in order to permit solidification and to anneal the weld. The deposited weld metal cools uniformly and is, therefore, comparatively free from stresses. Its physical properties are similar to those of forged steel. The mold is then removed and the risers and gates are cut away with an oxy-acetylene torch. The thermit weld may be machined if necessary. Machining applies particularly to welded shafts or similar parts where the collar of reinforcing metal at the joint exceeds the desired finished dimensions.

Section IV. FORGE WELDING

8–12. General

a. Forge welding, as performed by the blacksmith, is by far the oldest process for joining metal pieces or parts but hand-forged welding is no longer used extensively because of the development of oxy-acetylene and electric-arc welding. It is, however, an effective process under some field conditions and equipment and procedures required in hand forge welding are, therefore, described only briefly in this manual.

8–13. Application

Forge welding is a group of welding processes wherein coalescence is produced by use of tools and equipment described in section VI, chapter 5. Metal parts are heated in a forge furnace with fuel such as coal, coke, or charcoal. The parts to be joined are heated until the surface of the metal becomes plastic. When this condition is reached, the parts are quickly superimposed and the weld is made by pressure or hammering. The hammering may be done by either hand or machine and the force of the hammering or pressure depends on the size and mass of the parts being joined. In this process, the surfaces to be joined must be free from foreign matter. In some cases, a flux is used (usually sand or borax sprinkled on the surfaces to be joined) just before the metal reaches the welding temperature in order to remove the oxide and dirt. The flux spreads over the metal, prevents further oxidation by keeping out the air, lowers the melting point of the scale, and makes it fluid, so that it can be squeezed out of the weld when the metal is hammered. Various types of forge welds are shown in figure 8–3.

b. Because of the development of machine forge welding the speed of welding and the size of the parts to be welded have increased greatly. Long seams in lap or butt welded pipe can be made and the quality of the weld is such that its location is almost impossible to detect. This process requires the use of a gas flame or other suitable heating method to bring the edges of the metal up to the welding temperature. Pressure is applied by rolls which press the plastic edges together until another set of rolls move to the parts being welded along the line of welding.

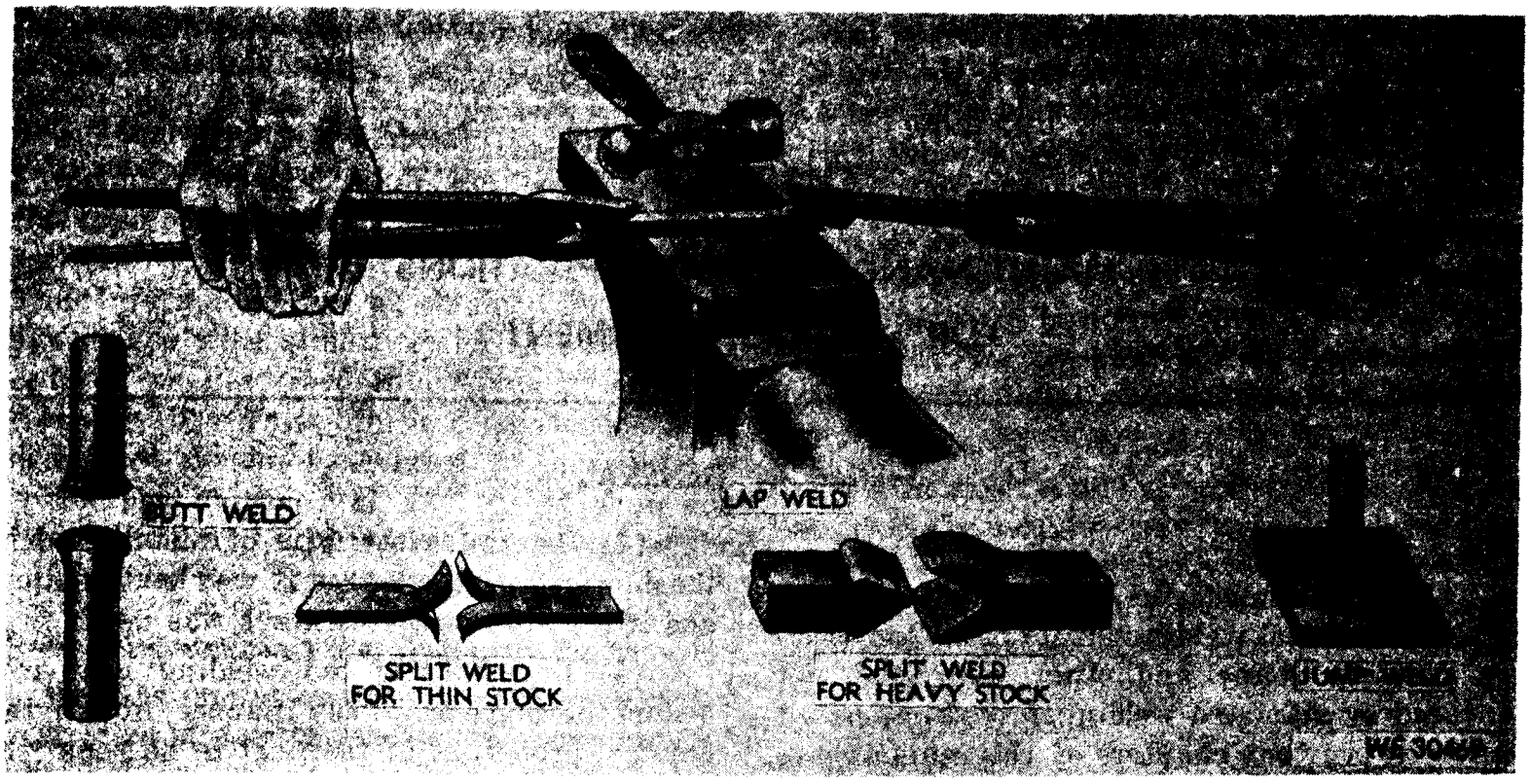

Figure 8–3. Types of forge welds.

CHAPTER 9

MAINTENANCE WELDING OPERATIONS FOR MILITARY EQUIPMENT

Section I. GENERAL

9–1. Scope

This chapter contains descriptions of materials and special welding information for specific military items and other equipment not covered by standard welding procedures as set forth in previous chapters of this manual. Appendix A contains references to formal DA publications covering additional equipment used by military personnel which are not included in this chapter. Welding technique for equipment containing high yield strength, low carbon steels (such as TI) used for bulldozer blades, armor, and heavy structural work is covered in paragraph 7–18 of this manual.

9–2. Sizing Up the Job

a. All of the materials used in the manufacture of military material as well as the assembled equipment are thoroughly tested before the materiel is issued to the using services in the field. Therefore, most of the damage to and failures of, the equipment will be due to accidents, overloading, or unusual shocks which the equipment was not designed to withstand. It is in this class of repair work that field service welding will be utilized most frequently.

b. Before repairing any damaged materiel, it must be determined whether or not the materiel can be satisfactorily welded. This can be decided by giving due consideration to the factors cited below:

(1) Determine the nature and extent of the damage and the amount of straightening and fitting of the metal that will be required.

(2) Determine the possibility of restoring the structure to usable condition without the use of heat.

(3) Determine the type of metal used in the damaged part, whether it was heat treated, and if so, what heat treatment was used.

(4) Determine if the welding heat will distort the shape or, in any manner, impair the physical properties of the part to be repaired.

(5) Determine if heat treating or other equipment or materials will be required in order to make the repair by welding.

c. In emergency cases, some heat treated parts can be repaired in the heat treated condition by welding with stainless steel electrodes containing 25 percent chromium and 20 percent nickel, or an 18 percent chromium, 8 percent nickel electrode containing manganese or molybdenum. These electrodes will produce a satisfactory weld, although a narrow zone in the base metal in the vicinity of the weld will be affected by the heat of welding.

(1) Minor defects on the surface of heat treated parts may be repaired by either hard surfacing or braze welding, depending on their application in service. In any of these repairs, the heat-treated part will lose some of its strength, hardness, or toughness, even though the weld metal deposited has good properties.

(2) The preferred method of repairing heat treated steels, when practicable, requires the annealing of the broken part and welding with a high strength rod. This method produces a welded joint that can be heat treated. The entire part should be heat-treated after welding to obtain the properties originally found in the welded parts. This method should not be attempted unless proper heat treating equipment is available. Repairs of special alloy heat-

treated steels must be approved by the chief of the field service.

9–3. Identifying the Metal

Welding repairs should not be made until the type of metal used for the components or sections to be repaired has been determined. This information can be obtained by previous experience with similar materiel, by test procedures as described in chapter 2, or from assembly drawings of the components. These drawings should be carried by maintenance companies in the field and should show the type of materiel and the heat treatment of the parts.

9–4. Determining the Weldable Parts

Welding operations on ordnance materiel are restricted largely to those parts whose essential physical properties are not impaired by the welding heat. Successful welded repairs cannot be made on machined parts that carry a dynamic load. This applies particularly to high-alloy steels that are heat-treated for hardness or toughness, or both. Gears, shafts, antifriction bearings, springs, connecting rods, piston rods, pistons, valves, and cams are considered to be unsuitable for field welding. The principle reason for this being that the welding heat alters or destroys the heat treatment of these parts.

9–5. Selecting the Proper Welding Procedure

The use of welding equipment and the application of welding processes to different metals have been covered in previous chapters of this manual and a thorough working knowledge of these processes and metals is a necessity before a welding procedure for any given job can be selected. When it has been decided by competent authority that the repair can be made by welding, the factors outlined below should be considered.

a. The proper type and size of electrode, together with the current and polarity settings, must be determined if an arc-welding process is used. If a gas welding process is used, the proper type of welding rod, correct gas pressure, tip size, flux, and flame adjustment must be determined.

b. In preparing the edges of plates or parts to be welded, the proper cleaning and beveling of the parts to be joined should be considered. The need for backing strips, quench plates, tack welding, and preheating must be determined.

c. Reducing warping and internal stresses requires the use of proper sequence for welding, control and proper distribution of the welding heat, spacing of the parts to permit some movement, control of the size and location of the deposited weld-metal heads, and proper cooling procedure.

d. Military materiel is designed for lightness and the safety factors are, of necessity, low in some cases. This necessitates some reinforcement at the joint to compensate for the strength lost in the welded part due to the welding heat. To accomplish this, a reinforcement should be designed that will provide the required strength without producing high local rigidity or excessive weight.

9–6. Preliminary Precautions

Before beginning any welding or cutting operations on the equipment, safety precautions as listed below must be considered:

a. Remove all ammunition from, in, on, or about the vehicle or materiel.

b. Drain the fuel tank, close the fuel and oil tank shut off valves, and, if welding or cutting is to be done on the tanks, steam them out thoroughly and flush with water.

c. Have a fire extinguisher handy.

d. Keep heat away from optical elements.

e. Be familiar with and observe the safety precautions prescribed in chapter 4 of this manual.

Section II. WELDING AUTOMOTIVE EQUIPMENT

9–7. General

The automotive equipment such as trucks, tanks, tractors, and other vehicles, are constructed from a large number of metals that are processed under various heat treatments. The metals used include copper alloys of vari-

ous types, carbon and alloy steels, titanium aluminum, magnesium, lead, etc. The principal joining processes that may be used are gas and electric-arc welding, brazing, and soldering.

9–8. Determining the Welding Method

a. Table III (app. B) shows a list of automotive parts and the metals of which they are usually composed and the welding process, or processes used for their repair. The first column of the chart lists the parts, the second column shows the usual metal composition of the part, and the third column lists the joining processes suitable for the repair of the part.

b. Tables I and II (app. B) show the oxyacetylene and electric welding processes used for joining specific metals and should be used to supplement the table described in a above. The base metal or the alloy welding process recommended, the type of flame and rod for gas welding, the electrode material and type for arc welding, the fluxes, and heat-treatment required are shown in the two welding tables.

9–9. Cast Iron, Cast Steel, Carbon Steel, and Forgings

In general, parts composed of these metals can be repaired by the same procedure as that used for their assembly or by brazing or soldering if the joining equipment originally used is not available or suitable for the purpose. For instance, cast iron and cast steel may be repaired by gas welding, arc welding, or by brazing. Parts or sections made of carbon steel originally assembled by spot, projection, or flash welding may be repaired by gas or arc welding. The same is true of forgings.

9–10. Heat Treated Parts

a. Certain parts in automotive equipment are heat treated during their manufacture, to enable them to withstand the service for which they are intended. Welding of these parts should not be attempted unless the repair shop is equipped with suitable heat treating equipment for handling these parts after welding.

b. In some cases, alloy steels or specially heat treated parts may be repaired by using a heat affected zone that is weaker than the original heat treated part will remain in the vicinity of the welded joint. In general, where it is possible to heat treat the parts after welding, they should first be annealed. Filler metal of the same composition or properties as the base metal should be used, and the parts heat treated after welding.

c. In some cases, where the part to be welded is in a heattreated condition, a stainless steel or mild steel filler rod and the transition-bead welding method may be used. This method is described below:

(1) A layer of stainless steel (25 percent chromium, 20 percent nickel or modified 18 percent chromium, 8 percent nickel stainless steel rod) is deposited on the surfaces of the broken edges.

(2) After the preparation, as in (1) above, the edges are welded with mild steel or high strength filler metal. Where hardness and toughness are required in the finished weld, 11 to 14 percent manganese or high strength filler metal is deposited on the stainless steel layer instead of the mild steel, and the weld may then be covered with a layer of hard surfacing metal.

(3) Either of the methods described above will provide satisfactory properties in the weld metal deposit. With either of these methods, there will be a heat affected zone in the base metal. These methods are useful in the field, but should be used under emergency conditions only.

9–11. Welding of Truck Components

a. *Frames.* The frame proper is not authorized for repair by welding (TB 9–2300–247–10). In general, truck frame crossmembers and the outer horns (shackle ends) are made of heat treated alloy steel and are subjected to high bending, torsion or twisting, and impact loads. Crossmembers and horns for the frame may be straightened, repaired, and reinforced. A commonly used method for repairing and strengthening a broken or weakened crossmember or horn is with reinforcing plates as shown in figure 9–1.

(1) The type of reinforcement selected will depend on the location of the repair and

possible interference with the operation of elements of the truck. It should be noted that the ends of the plates will produce heat affected areas of decreased strength across the back and legs of the channel.

(2) All interfering welds and other protrusions should be ground flush before reinforcement plates are applied. These reinforcement plates should be approximately the same thickness as the frame element and the width should be sufficient to bring the weld flush with the top and bottom sections of the channel.

(3) The procedure outlined for reinforcing channels should be followed when reinforcing plates are added to angles, tees, box sections, or I beams. Arc welding is customarily used for truck frame crossmember repairs.

b. *Front Axles.* The front axles of standard automotive equipment are made of heat treated alloy drop forgings. Repairs by welding should not be made on these axles except as a temporary measure in an extreme emergency.

c. *Rear Axle Housings.* These elements are of welded pressed steel construction of great strength and simplicity of design. Some of the older types are composed of malleable iron or cast steel. The pressed steel and cast steel housings can be satisfactorily arc welded. The malleable iron housings should be repaired by brazing. Malleable iron housings may be repaired by welding if extreme precautions are maintained. Castings should be kept clean and or annealing present in vicinity of the weld.

d. *Drive Shafts.* Drive shafts are usually made of medium carbon seamless tubing and are readily weldable by either electricarc or gas welding.

e. *Machined Alloy-Steel Parts.* Highly stressed alloy steel machined parts, such as crankshafts, connecting rods, gears, and axle drive shafts, are not generally repaired by welding because of the impairment of their heat treatment by the heat of welding.

f. *Radiators.* Radiators can be repaired with an oxy-acetylene welding torch with a proper tip, common 50–50 solder, and a flux. The oxy-acetylene flame should be adjusted to give a slightly carburizing mixture. The areas around the leaks in the copper tubes should be thoroughly cleaned, preferably with a 5 percent solution of hydrochloric acid, and "tinned" before the joint is made in order to insure a tight joint. Where a leak is present at joints between copper and cast iron, the surface of the iron should be "pickled" before the repair is made. This is done by applying a 5 percent hydrochloride acid solution to the iron at the joint and heating until the iron is thoroughly cleaned. This treatment removes surface oxides, scale, and other impurities and makes the iron capable of being tinned as readily as the cleaned copper. In many cases, additional flux is required to complete joint repair.

9–12. Tractor Repairs

The tractors used in the field are of three types; namely, the light and medium gasoline Except for the frames and suspensions, the construction of these vehicles is in accordance with commercial truck practices. The metals used for crankcase housings, clutch transmission, control differentials, and final drive, as well as the main frames and hollow angle braces, can be repaired if necessary by welding. The rolled channel frames, cross members, and truck roller frames can be straightened, built up, and repaired by welding processes.

9–13. Combat Tank Repairs

Combat tank hulls are constructed of armor plate, to which the internal and external mechanisms of the tank are fastened. The suspension system consists largely of castings and forgings. Various castings are used throughout the power train. Welded repairs on these vehicles can be made to parts that do not carry the driving power load. In general, the repair of these parts or components requires special precautions such as preheating, post heat treatments, and the proper welding procedure for the work in hand. One of the principal welding repairs on tanks and other combat vehicles will be on damaged armor plate. The technique for armor plate welding is described in section IV of this chapter.

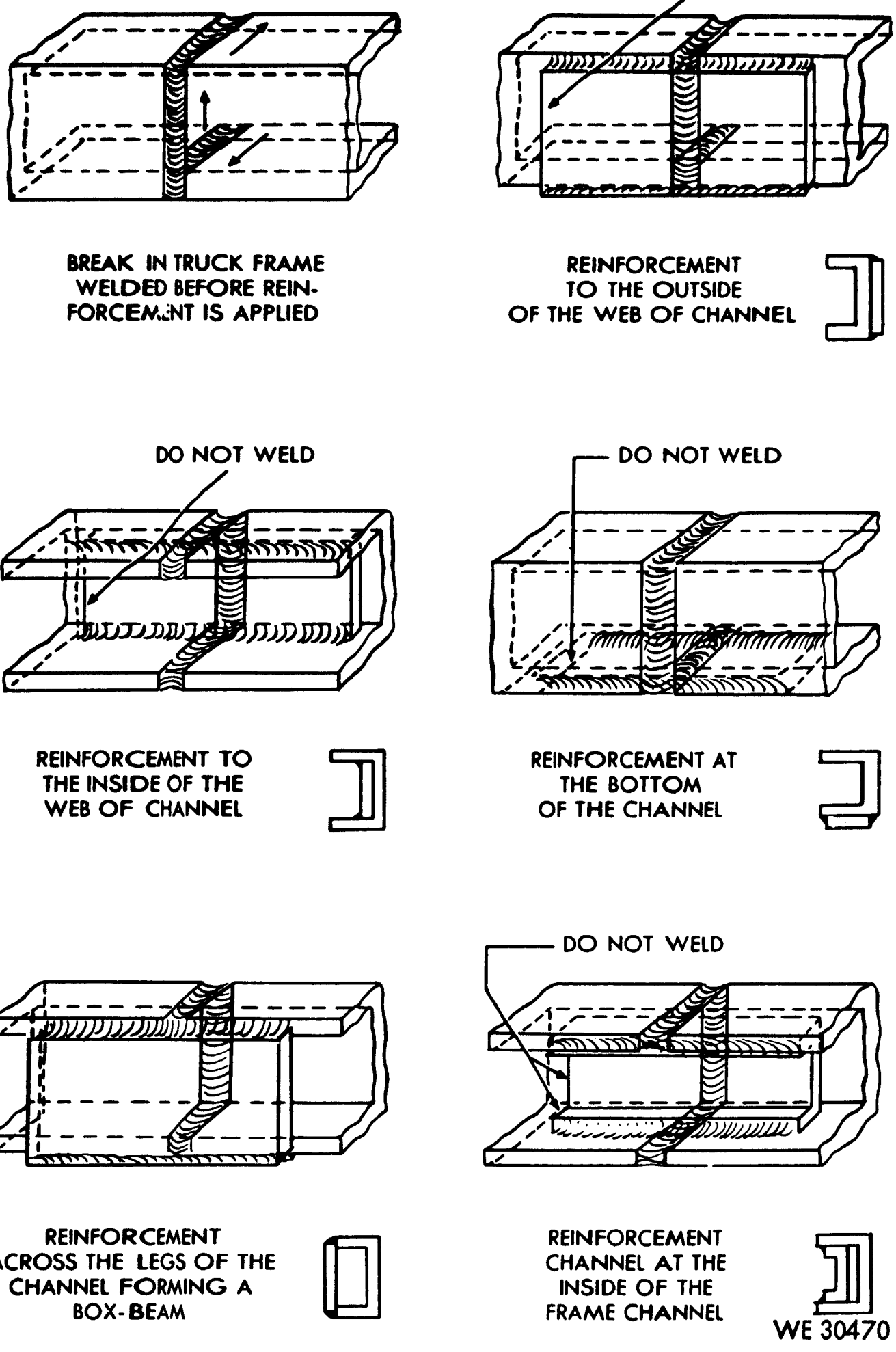
BREAK IN TRUCK FRAME WELDED BEFORE REINFORCEMENT IS APPLIED
DO NOT WELD
REINFORCEMENT TO THE OUTSIDE OF THE WEB OF CHANNEL
DO NOT WELD
REINFORCEMENT TO THE INSIDE OF THE WEB OF CHANNEL
DO NOT WELD
REINFORCEMENT AT THE BOTTOM OF THE CHANNEL
DO NOT WELD
REINFORCEMENT ACROSS THE LEGS OF THE CHANNEL FORMING A BOX-BEAM
REINFORCEMENT CHANNEL AT THE INSIDE OF THE FRAME CHANNEL
WE 30470

Figure 9–1. Methods of reinforcing damaged truck crossmembers.

Section III. WELDING ARTILLERY EQUIPMENT

9–14. General

Under field conditions, welding repairs on artillery materiel will be confined mainly to carriages and mounts. Damaged parts of the gun and cradle assembly will rarely be repaired by welding, since the materials of which they are made are usually of such a nature that welding operations destroy or adversely affect the properties of the metals or entail complicated heat treatment procedures.

9–15. Metals Used in Fabrication of Artillery Materiel

The principal metals of carriages, mounts, etc., are steels of the low and medium carbon and structural nickel alloy types. Before any welding operations are attempted, the personnel responsible for making the repair should be thoroughly familiar in identifying the type and weldability of the steel in the broken part.

9–16. Welding Repairs on Artillery Materiel

When selecting a welding procedure for artillery materiel, follow the recommendations given in appendix B. The low and medium carbon steels can be satisfactorily welded with mild steel electrodes or welding rods and, where it is necessary, severely damaged sections can be strengthened with suitable reinforcing plates. Trails that have been bent out of shape and cracked should first be straightened by the careful application of heat. The cracks should be welded and ground flush before reinforcing plates are applied. The reinforcing plates should be thick enough to provide for the necessary strength without making the structure too stiff. Only the seams running along the length of the trail should be welded on all reinforcing plates, *the end of the plates being left unwelded.* Welding of the ends would simply transfer to the welded ends of the reinforcing plate the conditions existing in the welded joint before adding reinforcement. This would result in weakness at this section and would defeat the purpose of the reinforcing plate. Gun shields are constructed of hard face armor plate. Section IV of this chapter covers welding of this material.

b. Trails constructed of structural nickel alloy steels are designed for lightness and specially treated for maximum strength. Welding of structures made of this steel present a more difficult problem. The top carriages or cradles should not be welded. Other structural members can be welded when approved by the chief of the field service. Field repairs by welding on these structures can be made, when authorized, by proper preheating, by welding with nickel alloy, 25–20 stainless steel or modified 18–8 stainless-steel electrodes, and finally, by slow cooling and a uniform stress relief heat treatment where possible. For many applications, welds can be made with these stainless steel electrodes without preheating or postheating.

Section IV. ARMOR PLATE WELDING AND CUTTING

9–17. General

a. Armor plate is used for the protection of personnel and equipment in combat tanks, self propelled guns, and other combat vehicles against the destructive forces of enemy projectiles. It is fabricated both in the form of castings and rolled plates which, in turn, are selectively heat treated to develop the desired structural and protective properties. Industrial manufacture of gun turrets and combat tank hulls includes designs using one-piece castings and welded assemblies of cast sections and rolled plates. In certain cases, cast sections of armor are bolted in place to expedite the requirements of maintenance through unit replacement. Welding has replaced riveting as a formative process of structural armor fabrication but riveting is still used on some vehicles protected by face hardened armor.

b. The development of a suitable technique for welding armor plate is contingent upon a clear understanding of the factors affecting the weldability of armor plates, the structural soundness of the weld, and its ultimate ability to withstand the forces of impact and penetration in service. From the standpoint of field

repair by welding, these considerations can be resolved into the factors outlined below:

(1) Knowledge of the exact type of armor being welded through suitable identification tests.

(2) Knowledge of alternate repair methods known to be satisfactory for the particular type of armor and type of defect in question.

(3) Design function of the damaged structure.

(4) Selection of welding materials and repair procedures from the facilities available to product optimum protective properties and structural strength.

(5) Determining the need for emergency repair to meet the existing situation.

(6) Careful analysis of the particular defect in the armor to insure proper disposition of the variables listed belw.

(a) Joint preparation and design.
(b) Welding electrodes.
(c) Welding current, voltage, and polarity
(d) Sequence of welding passes.
(e) Welding stresses and warpage.

(7) Proper protection or removal of flammable materials and equipment in the vicinity of the welding operation.

c. The advantages of welding as an expedient for field repair to damaged armor plate lie principally in the speed and ease with which the operation can be performed. The welding procedures for making repairs in the field are basically the same as those used for industrial fabrication but must be modified, at times, because of the varying types of damage due to impact, such as shown below:

(1) Complete shell penetration.

(2) Bulges or displaced sections.

(3) Surface gouges.

(4) Linear cracks of various widths terminating in the armor or extending to its outside edges.

(5) Linear or transverse cracks in or adjacent to welded seams.

d. Many of the repairs by welding require the selective use of patches obtained by cutting sections from completely disabled armored vehicles having similar armor plate. Also, most of the welding, whether around patches or along linear seams, is performed under conditions that, frequently, will permit no motion of the base metal sections to yield under contractions stresses produced by the cooling weld metal. The stress problem is further complicated by stresses produced by projectiles physically drifting the edges of the armor at the point of impact or penetration. It is with all of these variables in mind that the subsequent plate welding procedures are determined.

9–18. Properties of Armor Plate

Armor plate is an air hardening alloy steel, which means that it will harden by normalizing or heating to its upper critical point and cooling in still air. The base metal quenching effect produced adjacent to a weld in heavy armor plate under normal welding conditions is about halfway between the effects of air cooling and oil quenching. The extremely steep thermal gradients that occur in the region of a weld range from temperatures of 3,000 deg F., or more in the weld metal to ambient temperature in the base metal. Therefore, a narrow zone of each side of the deposited weld metal is heated above its critical temperature by the welding heat and quenched by the relatively cold base metal to form a hard brittle zone. It is in this hard non-ductile formation known as martensite that cracks are more likely to occur as a result of the sudden application of load. For this reason, special precautions must be taken in all welding operations to minimize the formation of these hard zones and to limit their effect on the structural properties of the welded armor. Care must be taken to prevent rapid cooling of the armor after welding, in order to avoid the formation of cracks in these hard zones.

9–19. Types of Armor Plate

a. *General.* Two types of armor are used on combat vehicles, namely, homogeneous (cast or rolled) and face hardened (rolled). It is essential that the armor be specifically identified before any welding or cutting operations are performed. This is important because the welding procedures for each type of armor are distinctly different and noninterchangeable.

b. ***Homogeneous** Armor.* Homogeneous armor is heat treated throughout its entire thickness to develop good shock or impact resisting properties. As its name indicates it is uniform in hardness, composition, and structure throughout and can be welded on either side. Aluminum armor plate is in the homogeneous class and welding procedures are the same as inert-gas metal-arc welding. See paragraph 7–20d.

c. *Face Hardened Armor Plate.* Face hardened armor plate has an extremely hard surface layer obtained by carburizing, which extends to a depth of 1/5 to ¼ of the outward facing thickness of the armor on the tank or armored vehicle. The primary purpose of face-hardened armor is to provide good resistance to penetration. The inner side is comparatively soft and has properties similar to those of homogeneous armor. As a matter of face, the inside and outside of face hardened armor plate are two different kinds of steel. Face hardened steel up to ½-inch in thickness should be welded from the soft side only.

9–20. Identification of Armor Plate

a. *File Test.* This test is a simple but accurate method of identifying armor plate. A file will bite into homogeneous armor plate on both sides, but will bite only the soft side of face hardened armor plate. When applied to the face side, the file will slip, acting in much the same manner as on case hardened steel.

b. *Appearance of Fracture.* The metal edges of holes or cracks in homogeneous armor plate are ragged and bent, with the metal drifted in the direction of the forces which damaged the armor. Cracks in homogeneous armor are usually caused by stresses and are present at severe bulges or bends in the plate or section. The metal edges of holes and cracks in face hardened armor are relatively clean cut and sharp. The plates do not bulge to any great extent before cracking. By examining the edges of freshly broken face hardened armor, it should be noted that the metal at the face side is brighter and finer in structure than the metal at the soft side. The brighter metal extends to a depth of approximately 1/5 to ¼ of the thickness from the surface of the face side.

9–21. Cutting Armor Plate

a. *Cutting Homogeneous Armor Plate.* Either the oxygen cutting torch, which is preferable, or the electric arc can be used to cut homogeneous armor plate. The carbon arc can be used to cut out welds and to cut castings and plates, but the shielded metal-arc is preferred when oxygen and acetylene are not available.

b. *Cutting Face Hardened Armor Plate.* The procedure for cutting this type of armor is essentially the same as that required for homogeneous armor except that every precaution should be taken to keep as much heat as possible away from the hard, face side of the plate. This is accomplished by performing all cutting operations from the soft side of the armor, thus limiting the extent of heating and consequent softening of the hardened surfaces.

(1) *CUTTING WITH THE OXYGEN TORCH.*

(a) The general practice used for oxygen-torch cutting can be applied for cutting armor plate but the tip size, cutting oxygen, and preheating gas temperatures should be kept at the minimum, consistent with good quality cuts, to prevent overheating.

(b) When the cutting of the stainless steel type of weld, such as is used on tanks and other armored vehicles is performed with an air-arc cutting torch, the cutting process must be modified to suit. This is necessary because stainless steel is a nonoxidizing metal. Cutting is, therefore, accomplished by using an oxidizable steel rod in conjunction with the oxygen cutting torch. The oxygen combines with the steel rod and the resultant evolution of high temperature creates high-temperature molten steel at the end of the rod. Drops of this molten steel are washed off of the weld and help to melt it. This washing action is accomplished by an oscillating motion of the torch tip which tends to cause the molten weld metal to wash away in thin layers. When thick welds are cut, the steel rod should be held against the side of the weld and fed downward as required to supply sufficient heat. The oscillating motion should also be used to aid in the removal of the metal. The cutting process in which the steel rod is used is illustrated in figure 9–2.

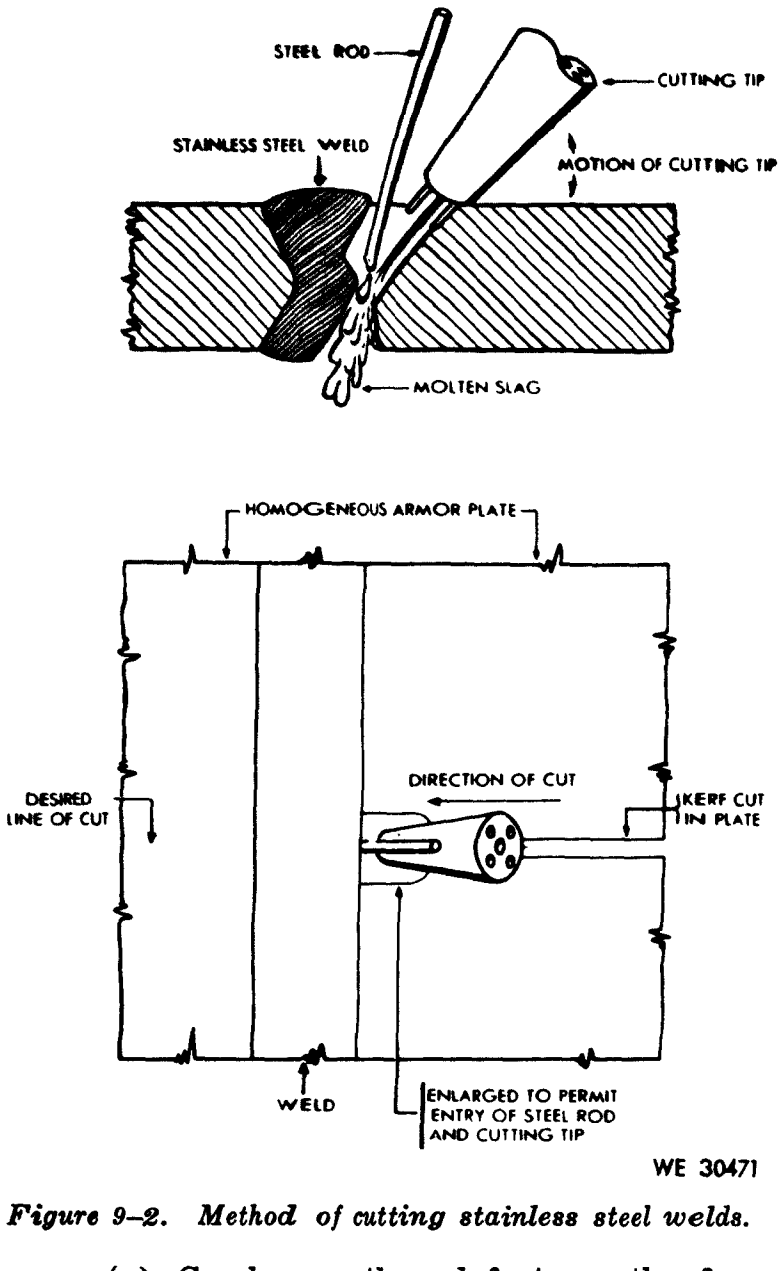

Figure 9–2. Method of cutting stainless steel welds.

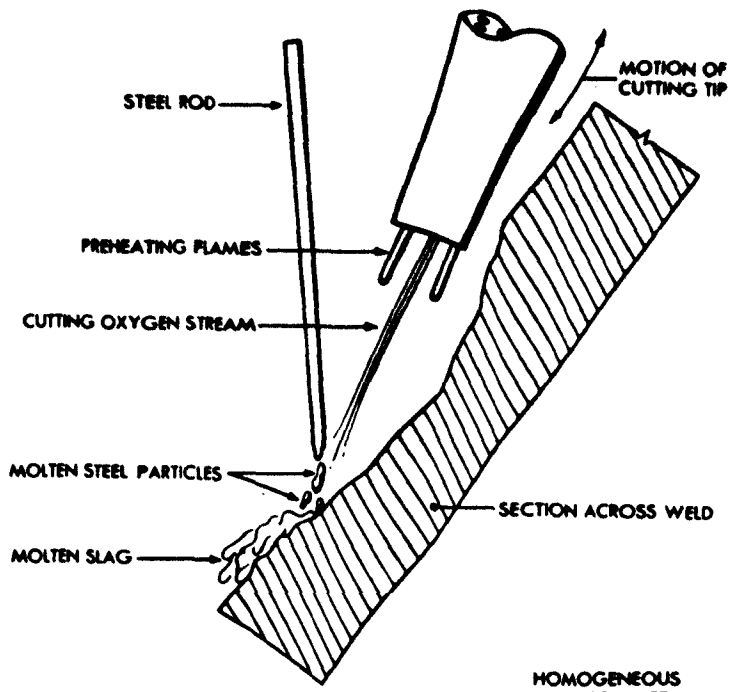

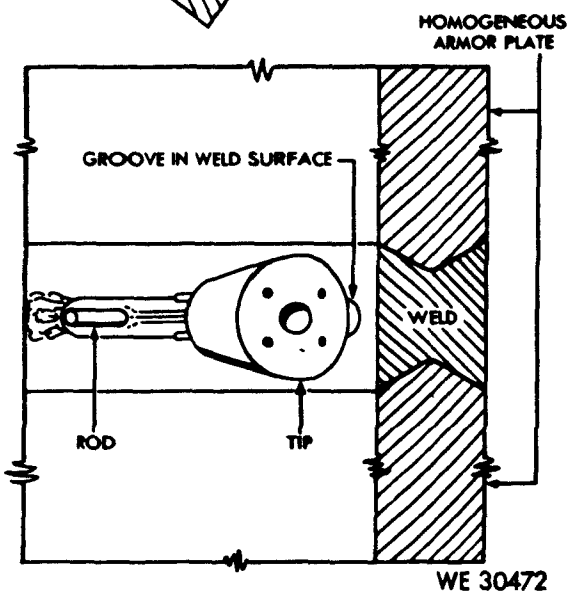

Figure 9–3. Method of removing surface defects from stainless steel welds.

(c) Cracks or other defects on the face of stainless-steel welds can be removed by holding the cutting tip at a slight angle from 9–3. The reaction between the cutting oxygen and the steel rod develops sufficient heat to melt the weld metal, which is washed away can be rewelded.

(2) *CUTTING WITH THE ELECTRIC ARC.*

(a) Electric-arc cutting is a group of processes whereby metal is severed along the heat of an arc maintained between the electrode and the base metal. Three procedures, described in (b) through (d) below, are used in cutting with the electric arc.

(b) Carbon-arc cutting is a process wherein the severing of metals is effected by progressive melting with the heat of an electric arc between a metal electrode and the base metal. Direct current, straight polarity (electrode negative) is preferred. The carbon arc is used under some conditions in conjunction with a jet of compressed air for the removal of defective austenitic weld metal. Cutting with the carbon arc is utilized for severing both ferrous and nonferrous metal but does not produce a cut of particularly good appearance. The electrodes are either carbon or graphite and preferably with a pointed end to reduce arc wandering and thus produce less erratic cuts.

(c) Metal-arc cutting is a process whereby the cut is produced by progressive melting and direct current, straight polarity is preferred. Coated electrodes ranging in diameters from $\frac{1}{8}$ to $\frac{1}{4}$-inch are used; larger diameters are not satisfactory because of excessive spatter. The thickness of the metal that can be cut by the metal-arc process is limited only by useful length of the electrodes,

which are obtainable in 14 and 18-inch lengths. The principal purpose of the electrode coating is to serve as an insulator between the core of the electrode and the side wall of the cut and, consequently, with less short-circuiting against the kerf. The cut provided by metal-arc cutting is less ragged than that produced with the carbon-arc but, nevertheless, is not satisfactory for welding without further preparation by grinding or chiseling. It is used for cutting both ferrous and nonferrous metals.

(d) Oxy-arc cutting is an oxygen cutting process wherein the severing of metals is effected by means of the chemical reaction of oxygen with the base metal at elevated temperatures, the necessary temperature being from combustion of acetylene with oxygen. Oxy-arc cutting is a recently developed process for the progressive cutting of metals. The cut is produced by a hollow-steel or ceramic electrode, which serves as a duct through which a stream of oxygen passes. The arc is used to bring the metal up to an incandescent heat and the oxygen produces the cut by rapid oxidation.

(3) After completing the cut by an arc-cutting process, the rough edges and adhering slag and scale should be removed by hammering, chipping, or grinding prior to welding.

9–22. Welding Homogeneous Armor Plate

a. *General.* Welding of damaged armor on vehicles in the field requires, as a preliminary step, that the type of armor be identified by a method such as described in paragraph 9–20. Homogeneous armor plate can be satisfactorily welded using the electric-arc welding process and 18–8 stainless steel, heavy coated electrodes, with reverse polarity. Armored vehicles that have been exposed to conditions of extreme cold shall not be welded until the base metal has been preheated sufficiently to bring the temperature of the base metal in the zone of welding up to not less than 100 deg F. At this temperature, the metal will be noticeably warm to the touch. If this preheat is not applied, cracking will occur in the welding cold base metal in the deposited weld metal.

b. *Procedure.*

(1) When simple cracks (A, fig. 9–4) are welded, the edges of the crack should be beveled by means of flame cutting to produce a double beveled joint (B, fig 9–4). Care should be taken to round off the corners at the toe and root of the joint. This is necessary in order to eliminate excessive weld metal dilution by base metal when welding at these points. The included angle of bevel should be approximately 45 deg to provide electrode clearance for making the root welding beads. The root opening should be from 3/16 to 5/16-inch, depending on plate thickness (fig. 9–4).

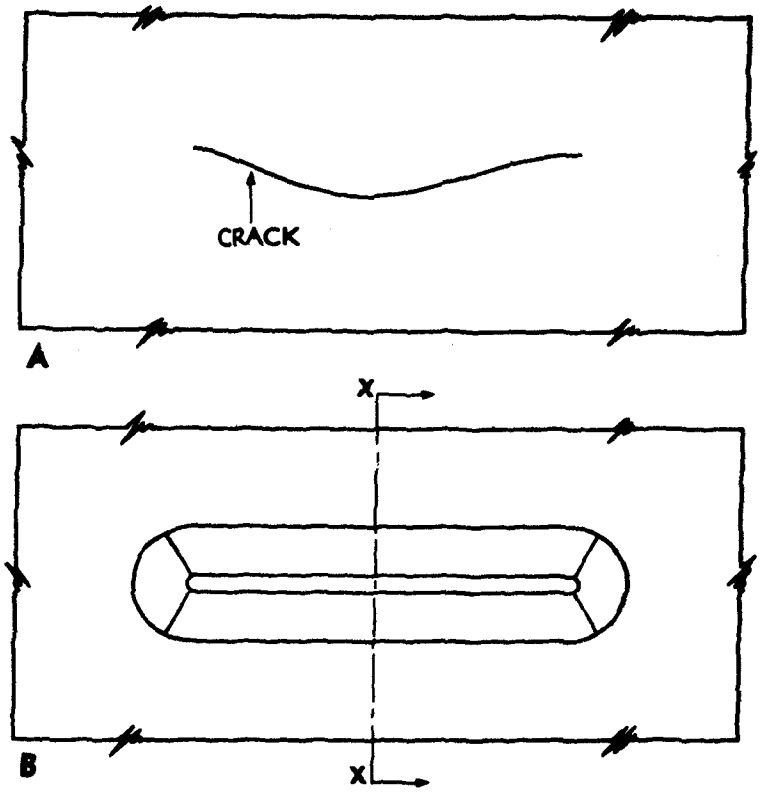

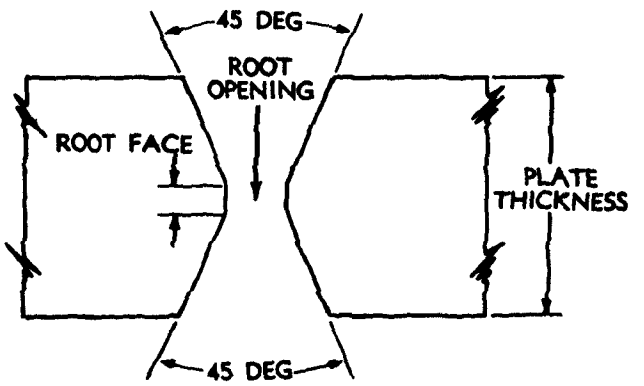

SECTION X–X

PLATE THICKNESS	ROOT OPENING	ROOT FACE
3/8 TO 7/8	3/16	±0
1 TO 1-1/2	1/4	±0
GREATER THAN 1-1/2	5/16	±1/16

± TOLERANCE, PLUS 3/16, MINUS 0

± TOLERANCE, PLUS 1/16 MINUS 0

NOTE: ALL DIMENSIONS SHOWN ARE IN INCHES

WE 30473

Figure 9–4. Preparation for welding cracks in homogeneous armor plate.

(2) The weld beads deposited at the root of the weld must be of good quality and it is essential that care be taken to prevent cracks, oxide and slag inclusions, incomplete penetration, or excessive weld metal dilution in this area. Some of the methods recommended as preparatory steps for root bead welding are shown in figure 9–5. For narrow root openings, a 3/16-inch stainless steel electrode without coating can be tack welded in place (A, fig. 9–5). Welding bead numbers 1, 2, 3, and 4 are then deposited in that order. All slag and oxides should be removed from the joint before beads number 3 and 4 are deposited, to insure a sound weld in this zone. If a mild steel rod or strip is used instead of a stainless steel rod (B, fig. 9–5), the back side of the backing rod or strip should be chipped out after beads 1 and 2 are deposited to minimize dilution in beads 3 and 4. The use of a stainless steel strip as a backing for root beads in a wide root opening is shown at C, figure 9–5, together with the sequence of root bead; and the alternate method for a wide root opening, with a mild steel strip as shown at D, figure 9–5. When the alternate method is used, the backing rod or strip should be chipped out (B, fig. 9–5). Another procedure uses a copper backing bar (E, fig. 9–5). The copper bar is removed after beads 1 and 2 are deposited, the beads will not weld to the bar. Beads 3 and 4 are then deposited (A, fig. 9–5). In certain cases where plates of homogeneous armor are cracked along their entire length, thus permitting easy access to the entire cross section of the plate, another method of joint preparation can be used (F, fig. 9–5). The beads deposited at the root of the bevel, in each case, act as a backing for beads subsequently deposited.

(3) A major factor when welding cracks in armor that terminate within the plates is weld crater and fusion zone cracking, especially in the root beads. An intermittent backstep and overlap procedure (C, fig. 9–6) is recommended to overcome or avoid this hazard and it should be noted that all of the welding steps necessary to complete bead number 1 are completed before bead number 2 is started. By back stepping the passes, the craters at the end of each pass are located on previously deposited metal and are, therefore, less subject to cracking. All craters on subsequent passes that do not terminate on previously deposited metal should be filled by a hesitation and drawback technique to avoid the formation of star cracks which are caused by the solidification of shallow deposits of molten weld metal.

(4) Each pass in beads 1, 2, 3, and 4 (A and B, fig. 9–6) is limited to from 1 to 2 inches in length and should be peened while the weld metal is still hot to help overcome the cooling stresses. No electrode weaving motion should be used when the root beads are deposited and the welding should be performed preferably with a 5/32-inch electrode. Peening also tends to eliminate or minimize warpage in the section being welded. Arc blow should be controlled by properly adjusting the welding. Some of the more common defects encountered when welding root beads on homogeneous armor plate and remedial procedures are shown in figure 9–7.

(5) The sequence of welding beads and the procedure recommended to completely weld the double beveled joint is shown in figure 9–8. This welding should be performed with 5/32 or 3/16-inch electrodes. The electrode is directed against the side wall of the joint, so as to form an angle of approximately 20 to 30 deg with the vertical. The electrode should also be inclined 5 to 15 deg in the direction of the welding. By this procedure, the side wall penetration can be effectively controlled. The electrode weaving motion should not exceed 2½ electrode core wire diameters. This is important, because stainless steel has a coefficient of expansion approximately 1½ times that of mild steel, and consequently, if a weaving motion greater than that recommended is used, longitudinal shrinkage cracks in the weld or fusion zone may develop. The thickness of the layer of metal deposited can be varied by controlling the speed of welding. The sequence of passes used for completely filling a double-beveled joint (fig. 9–9) was determined after consideration of all the foregoing factors.

(6) By alternating the deposition of metal first on one side of the joint and then the other, a closer control of heat input at the joint is obtained and the shape of the welded

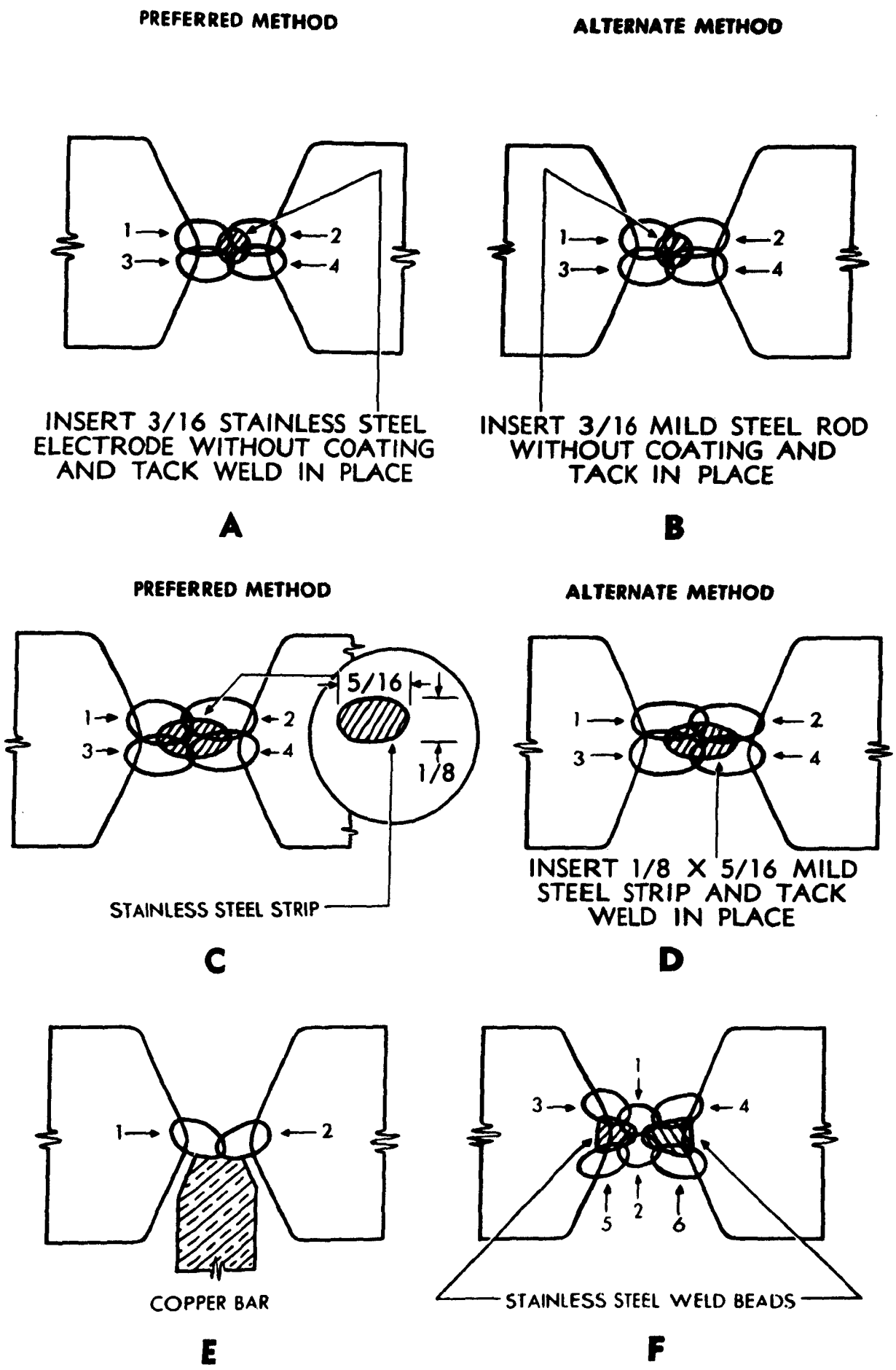

Figure 9–5. Backing methods for depositing weld beads at the root of a beveled joint.

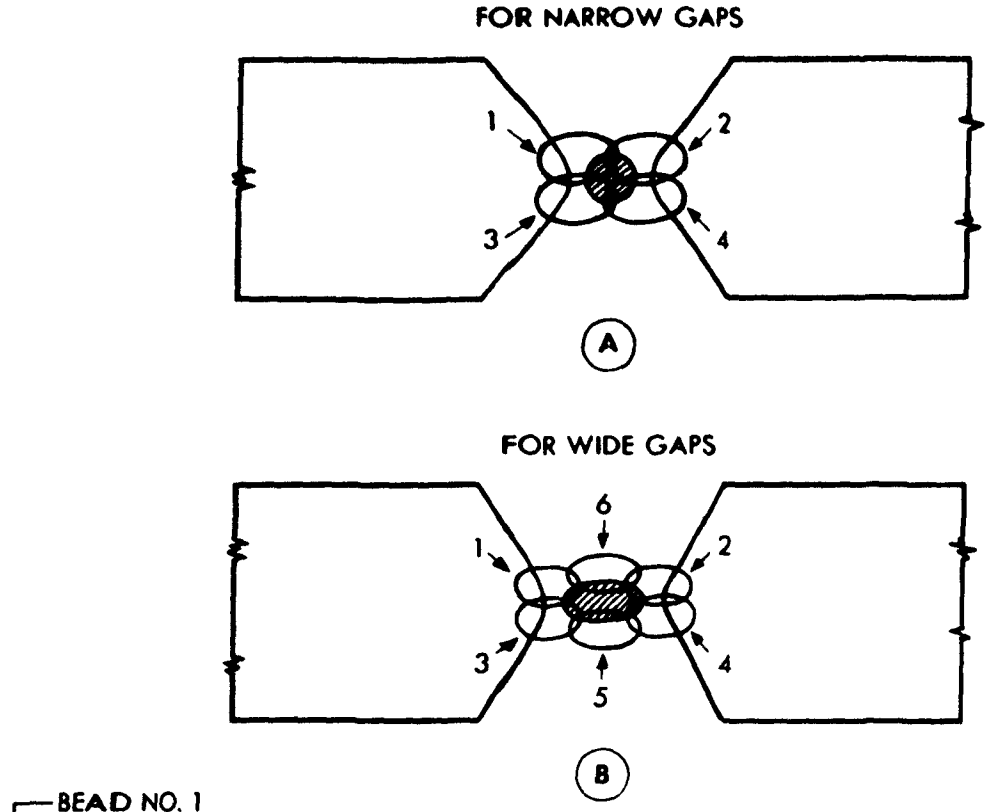

Figure 9–6. Sequence of passes when depositing weld beads on homogeneous armor plate.

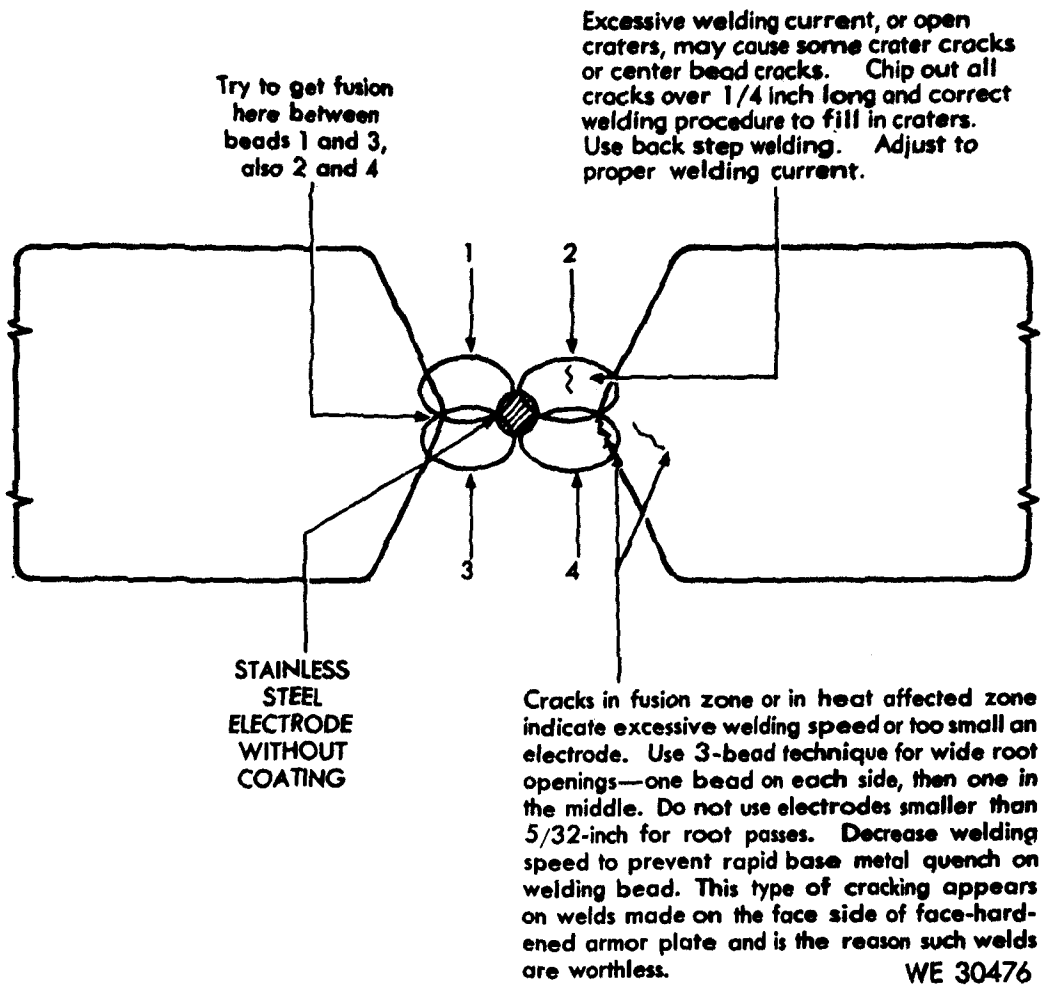
Try to get fusion here between beads 1 and 3, also 2 and 4
Excessive welding current, or open craters, may cause some crater cracks or center bead cracks. Chip out all cracks over 1/4 inch long and correct welding procedure to fill in craters. Use back step welding. Adjust to proper welding current.
1
2
3
4
STAINLESS STEEL ELECTRODE WITHOUT COATING
Cracks in fusion zone or in heat affected zone indicate excessive welding speed or too small an electrode. Use 3-bead technique for wide root openings—one bead on each side, then one in the middle. Do not use electrodes smaller than 5/32-inch for root passes. Decrease welding speed to prevent rapid base metal quench on welding bead. This type of cracking appears on welds made on the face side of face-hardened armor plate and is the reason such welds are worthless.
WE 30476

Figure 9–7. Common defects when welding root beads on homogeneous armor and the remedial procedure.

structure can be maintained. Each layer of metal deposited serves to stress relieve the weld metal immediately beneath it and will also partially temper the heat affected zone produced by the previous welding bead in the base metal. The passes at the toe of each weld layer also serve as annealing passes and are deposited before intermediate passes are added to completely fill the intervening space (see passes 9 and 11, 12 and 14, 18 and 20, 15 and 17, etc., fig. 9–9). These annealing passes are important factors in the elimination of fusion-zone cracks which might start at the surface of the weld. Through careful control of the depth of penetration, a heat affected zone with a scalloped effect is produced.

c. Emergency repairs on cracked armor plate can be made by using butt straps on the back of the cracked armor (fig. 9–10). The primary purpose of these butt straps is to strengthen the section weakened by the crack.

d. Complete penetrations in homogeneous armor plate are repaired by using the procedures shown in figures 9–11 through 9–13. It should be noted that considerable structural damage is done to the metal immediately adjacent to the shell penetration (fig. 9–12). A sufficient amount of metal should be removed to insure complete freedom from protrusions and subsurface cracks together with good contact between the patch and the base armor plate as shown in figure 9–11. Where the projectile penetration openings are large, relative to the thickness of the plate, a plug patch of homogeneous armor having the same thickness as the base metal should be used. The plug patch should be shaped and welded in place as shown in figure 9–13. Small diameter penetrations in armor can be repaired by plug welding without the use of patches.

e. Bulges in armor that are also cracked but do not interfere with the operation of internal mechanism in the vehicle can be repaired by welding the cracked section, using

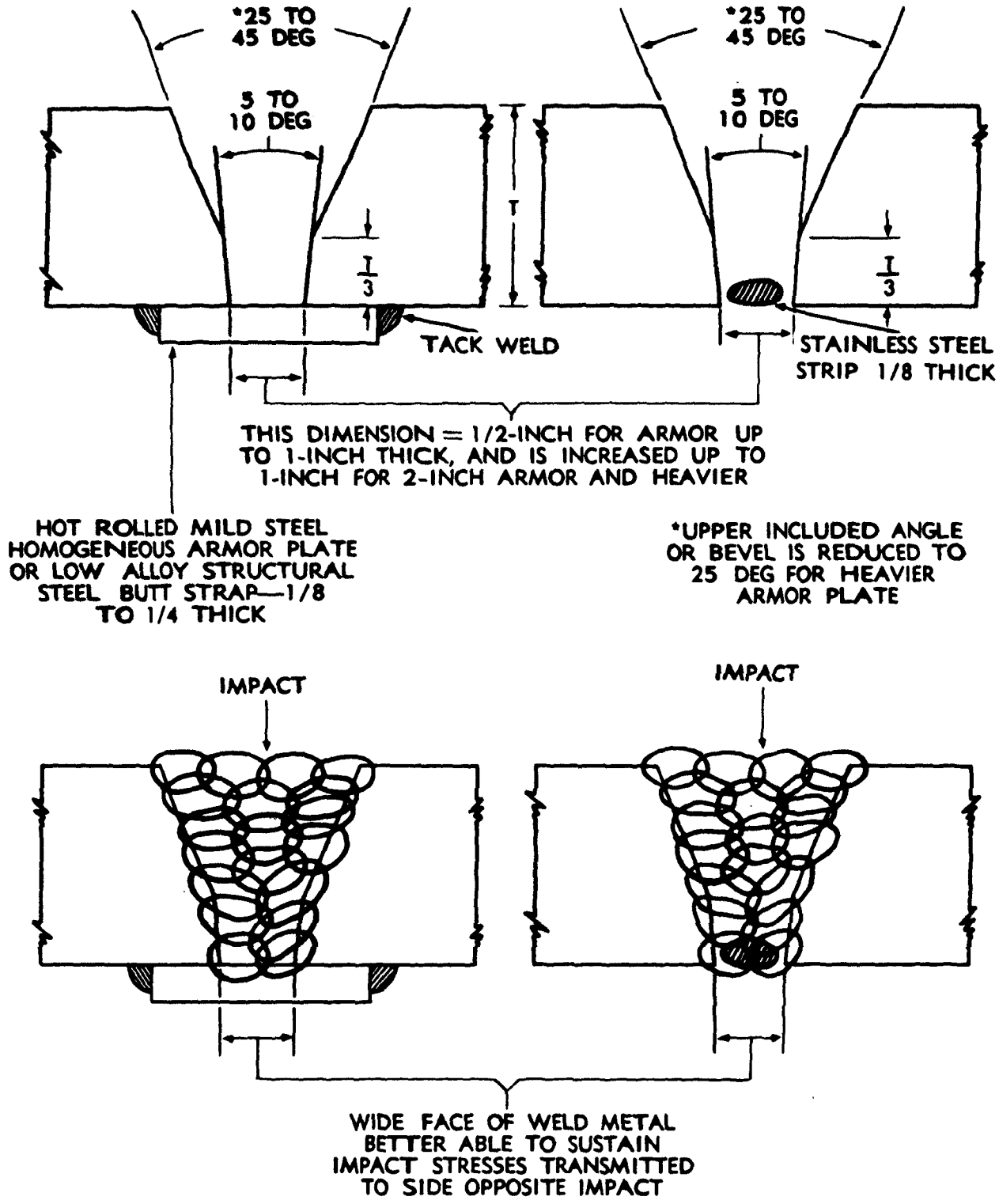
*25 TO 45 DEG
5 TO 10 DEG
T
1/3
TACK WELD
*25 TO 45 DEG
5 TO 10 DEG
1/3
STAINLESS STEEL STRIP 1/8 THICK
THIS DIMENSION = 1/2-INCH FOR ARMOR UP TO 1-INCH THICK, AND IS INCREASED UP TO 1-INCH FOR 2-INCH ARMOR AND HEAVIER
HOT ROLLED MILD STEEL HOMOGENEOUS ARMOR PLATE OR LOW ALLOY STRUCTURAL STEEL BUTT STRAP—1/8 TO 1/4 THICK
*UPPER INCLUDED ANGLE OR BEVEL IS REDUCED TO 25 DEG FOR HEAVIER ARMOR PLATE
IMPACT
IMPACT
WIDE FACE OF WELD METAL BETTER ABLE TO SUSTAIN IMPACT STRESSES TRANSMITTED TO SIDE OPPOSITE IMPACT
NOTE: ALL DIMENSIONS SHOWN ARE IN INCHES.
WE 30477

Figure 9–8. Procedure for welding homogeneous armor from side to side.

the procedure previously described in this section. For best repairs, however, the bulge should be cut out and a patch inserted. Where bulges interfere with the operation of internal mechanism, grinding, or chipping of the bulged surface can be applied to remove the interference. In all cases, the welds should be made to the full thickness of the plate and all cracks over ¼-inch in width should be chipped out before rewelding.

f. Where it is not feasible to make the welding repair from both sides of the armor, the joint must necessarily be made from one side (fig. 9–8). It will be noted that either a butt

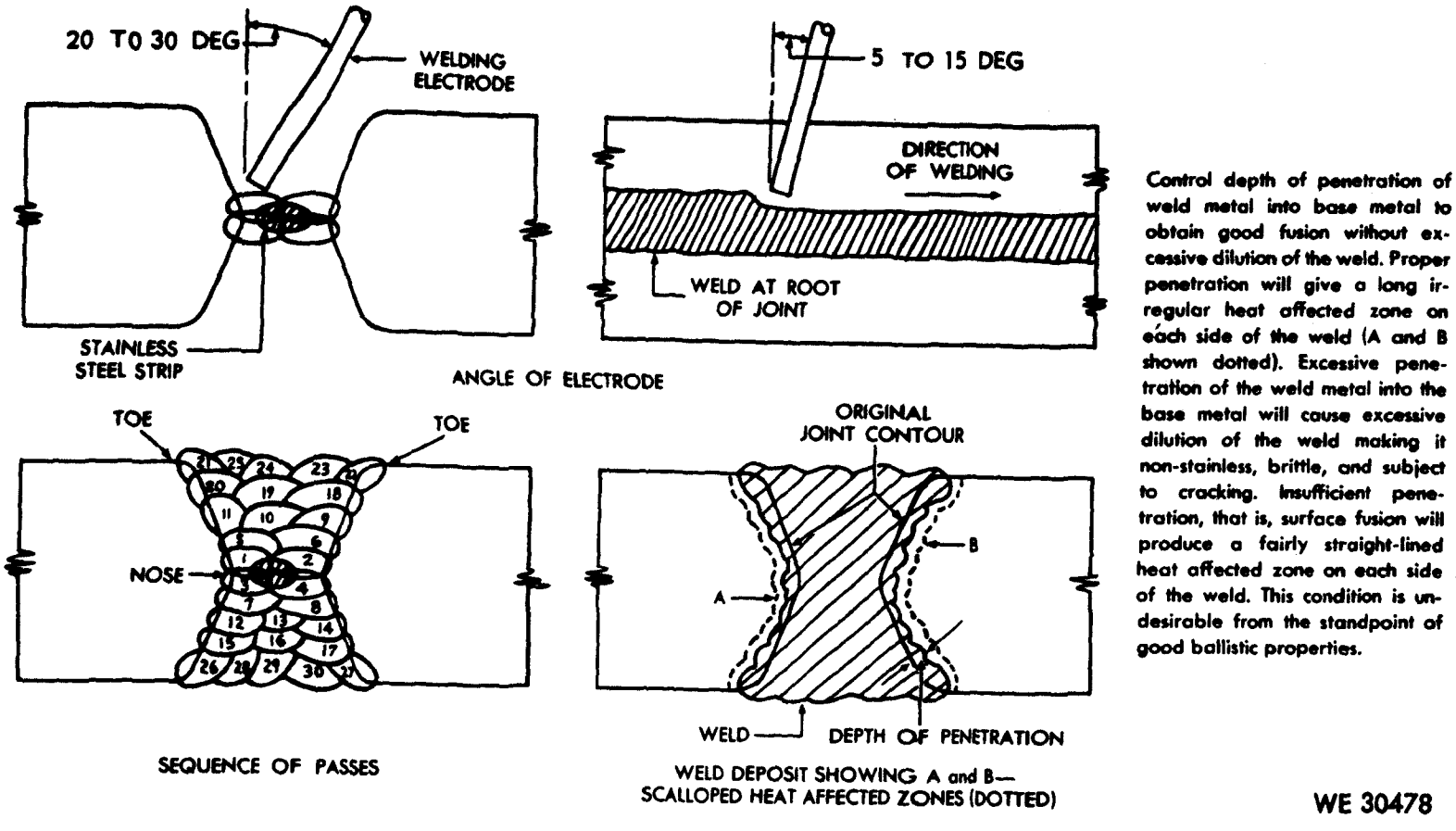

Control depth of penetration of weld metal into base metal to obtain good fusion without excessive dilution of the weld. Proper penetration will give a long irregular heat affected zone on each side of the weld (A and B shown dotted). Excessive penetration of the weld metal into the base metal will cause excessive dilution of the weld making it non-stainless, brittle, and subject to cracking. Insufficient penetration, that is, surface fusion will produce a fairly straight-lined heat affected zone on each side of the weld. This condition is undesirable from the standpoint of good ballistic properties.

Figure 9–9. Double bevel weld on homogeneous armor plate.

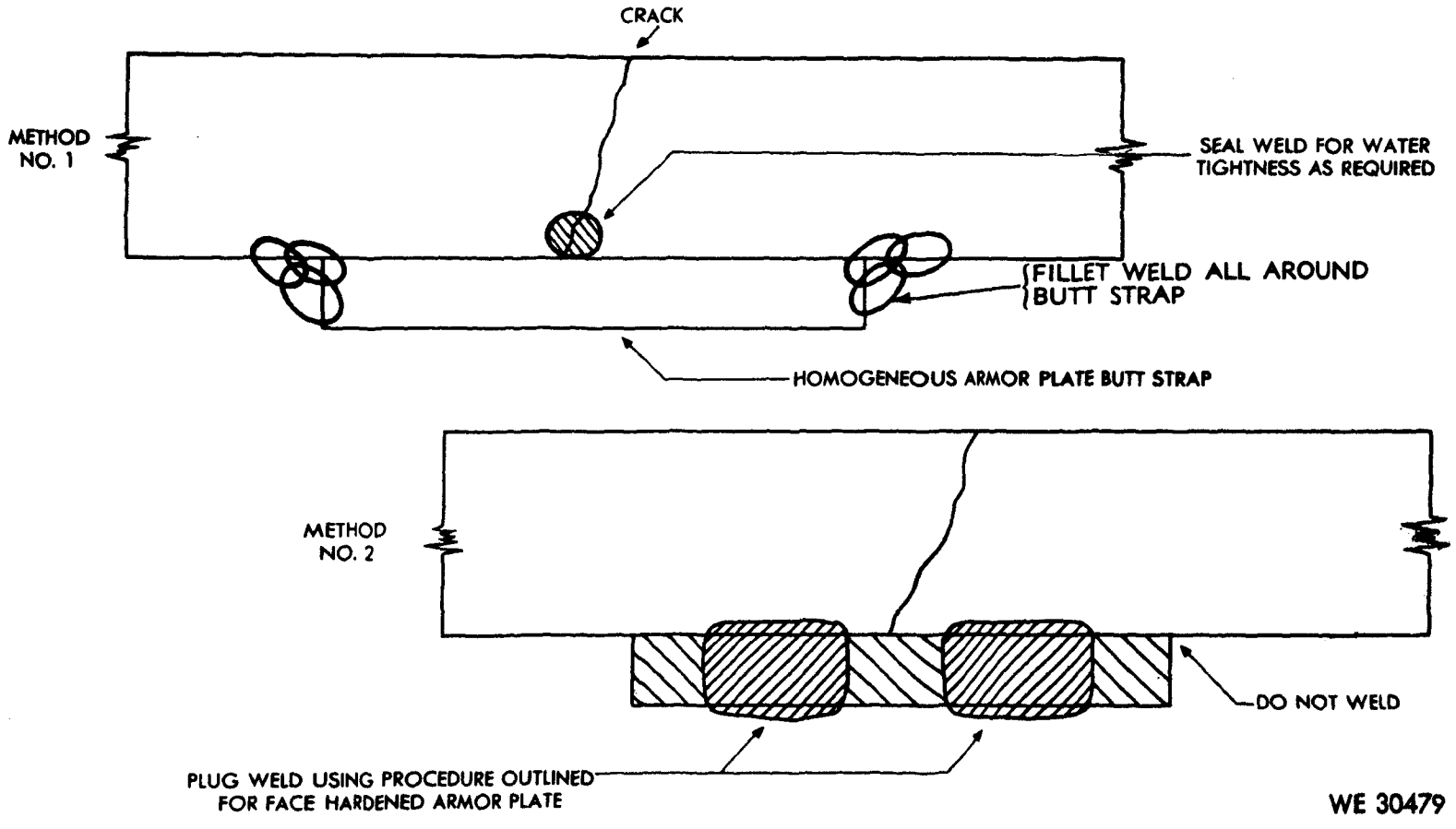
CRACK
METHOD NO. 1
SEAL WELD FOR WATER TIGHTNESS AS REQUIRED
FILLET WELD ALL AROUND BUTT STRAP
HOMOGENEOUS ARMOR PLATE BUTT STRAP
METHOD NO. 2
DO NOT WELD
PLUG WELD USING PROCEDURE OUTLINED FOR FACE HARDENED ARMOR PLATE
WE 30479

Figure 9–10. Butt strap welds on cracked armor plate.

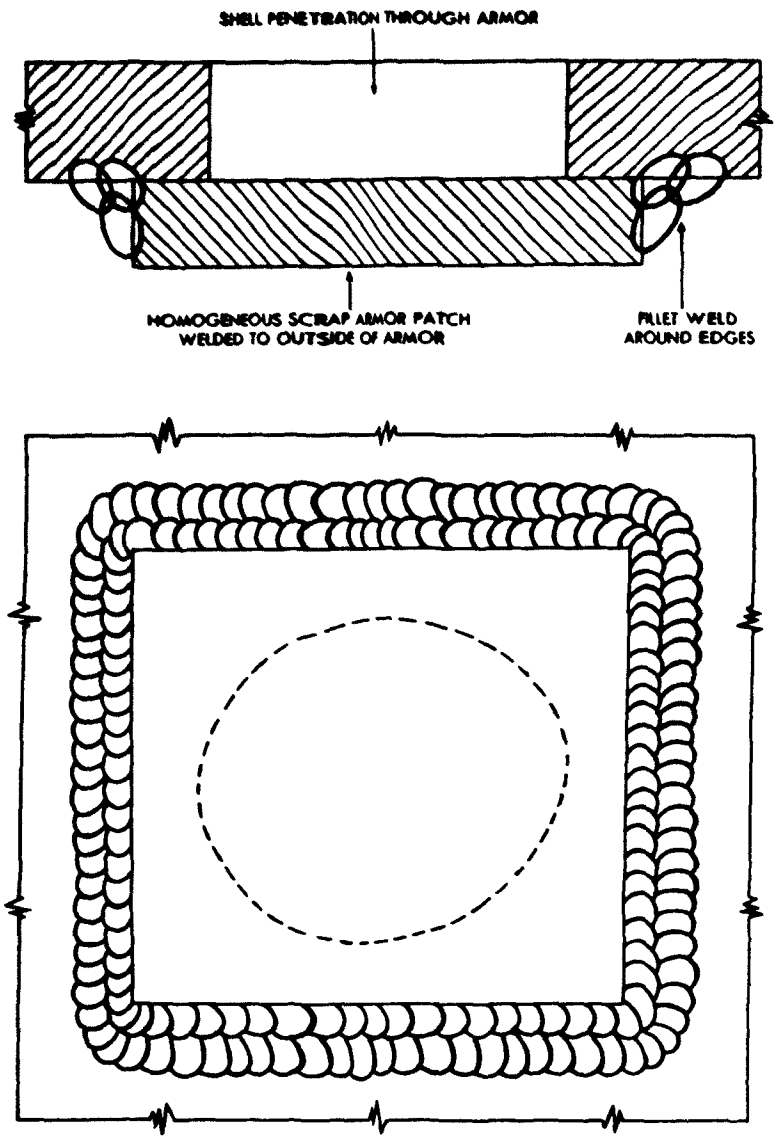
SHELL PENETRATION THROUGH ARMOR
HOMOGENEOUS SCRAP ARMOR PATCH WELDED TO OUTSIDE OF ARMOR
FILLET WELD AROUND EDGES
WE 30480

Figure 9–11. Emergency repair on penetration through armor.

strap or a stainless steel strip can be used as a backup for the root beads of the weld.

g. For applications where a butt strap would interfere with the operation of internal mechanism, the technique that permits removal of the butt strap after welding is used (fig. 9–14).

h. When armor is struck by a projectile impacting at a fairly low angle and is merely gouged at the surface (fig. 9–15), the joint should be prepared to enable welding from both sides. However, where the gouge does not extend over halfway through the place thickness and does not produce appreciable bulging on the inside, it is recommended to fill the gouge with weld metal.

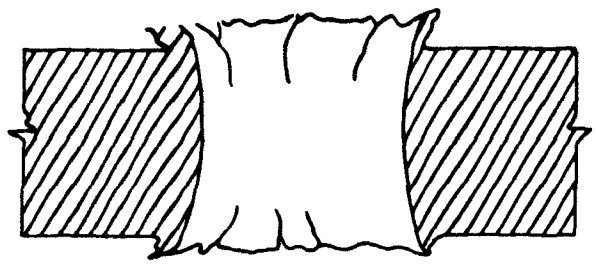

SHELL PENETRATION IN HOMOGENEOUS ARMOR PLATE. ALL TORN AND IRREGULAR EDGES SHOULD BE FLAME CUT BEFORE BEVELING SIDEWALLS FOR WELDING

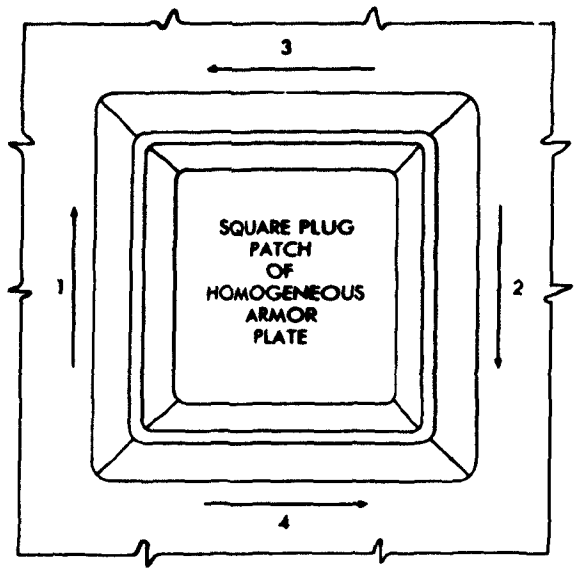

SQUARE PLUG DESIGN HAS DISTINCT ADVANTAGES OVER ROUND PLUG IN THAT STRAIGHT LINE WELDS CAN BE MADE. ROUND PLUGS REQUIRE CONSTANT VARIATION IN ANGLE OF ELECTRODE TO MAKE CURVED WELDS. THIS PROCEDURE PROMOTES ERRATIC PENETRATION AND IRREGULAR WELDS. NUMBERS INDICATE SEQUENCE TO BE USED IN WELDING

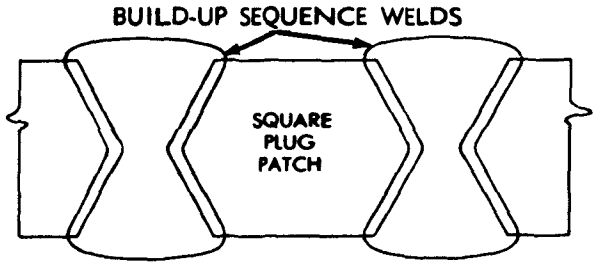

Figure 9–12. Double bevel plug welding procedure for repairing shell penetration in homogeneous armor plate.

9–23. Welding Face Hardened Armor Plate

a. *General.*

(1) Face-hardened armor plate can be welded satisfactorily, using the electric arc welding process and 18–8 stainless steel reverse polarity, heavy-coated electrodes. The face side of face hardened armor is extremely hard and brittle. Special precautions must be taken to avoid excessive heating and distortion of the plate and to prevent cracking of the face due to stresses applied thereby. A satisfactory method for welding this type of armor makes use of the butt strap and plug weld technique. The welding procedure for

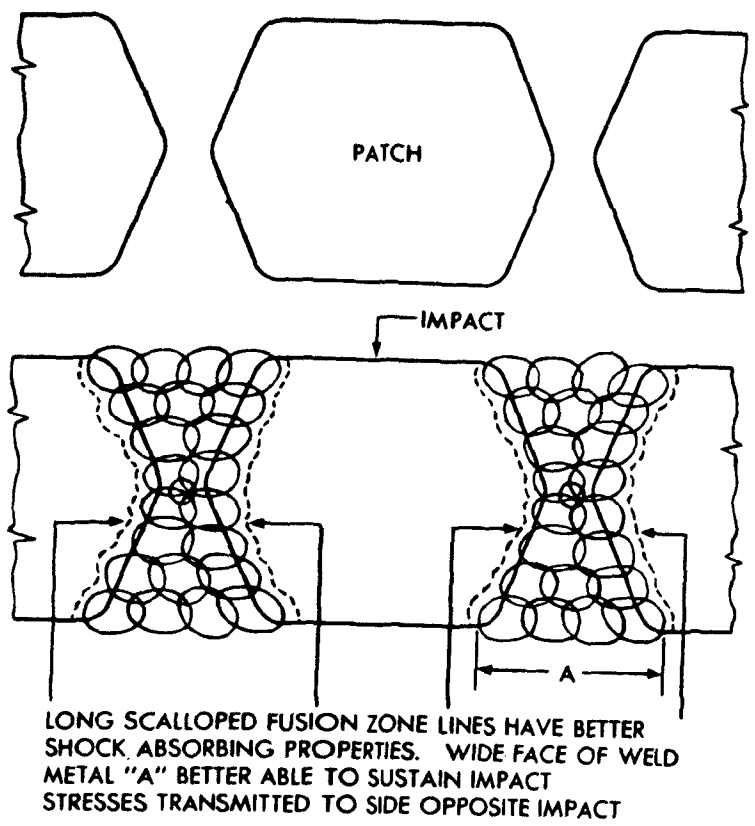
PATCH
IMPACT
A
LONG SCALLOPED FUSION ZONE LINES HAVE BETTER SHOCK ABSORBING PROPERTIES. WIDE FACE OF WELD METAL "A" BETTER ABLE TO SUSTAIN IMPACT STRESSES TRANSMITTED TO SIDE OPPOSITE IMPACT
DOUBLE BEVEL JOINT—CORRECT
PATCH
IMPACT
FAIRLY STRAIGHT FUSION ZONE LINE HAS POOR BALLISTIC STRENGTH
K-TYPE JOINT—INCORRECT
WE 30482

Figure 9–13. Correct and incorrect plug weld penetration for repairing shell penetration in homogeneous armor plate.

face hardened armor varying from ¼ to 1-inch in thickness is illustrated in figures 9–16 and 9–17. The welding is done from the soft side of the armor plate and the strength of the joint depends upon the soundness of the plug welds. The butt strap should be cut so as to conform to dimensions given for the particular thickness of face hardened armor being welded. The place is tack welded to the soft side of armor through elongated slots cut into the butt strap. The plugs should then be welded to completely fill the slots without excessive weld reinforcement or undercutting at the surface of the plug. These precautions are necessary in order to eliminate surface discontinuities which act as stress raisers and are a good source for crack formations under impact loads. To effectively seal the crack in face hardened armor against lead splatter and where watertightness is required, a seal bead weld should be made on the soft side and ground flush before applying the butt strap. All welding should be performed on clean, scale free surfaces. Previously deposited weld metal should be thoroughly cleaned by chipping and wire brushing to remove slag and oxides to insure sound welds.

(2) Crater cracks can be eliminated by the back step and overlap procedures or by using the electrode hesitation and drawback technique. Crater cracks formed in the initial weld passes should be chipped out before additional weld metal is applied. They can be welded out successfully on all subsequent passes of the weld. As a further precaution, string beads should be used for the initial passes. For subsequent passes, do not weave the electrode more than 2½ electrode core wire diameters. The efficiency of the joint welded by this method depends upon good fusion to the base metal and side walls of the slots in the butt strap.

(3) If straightening is necessary, do not hammer on the face of the armor; all hammering should be done on the soft side, on the butt strap, or on the plug welds. Force should not be applied to straighten face-hardened armor if the applied force will produce tension on the face side.

(4) Where two or more butt straps are used to repair irregular cracks or to make a patch weld, the butt straps are welded together for additional strength (fig. 9–18).

b. *Armor Plate Repair Methods.*

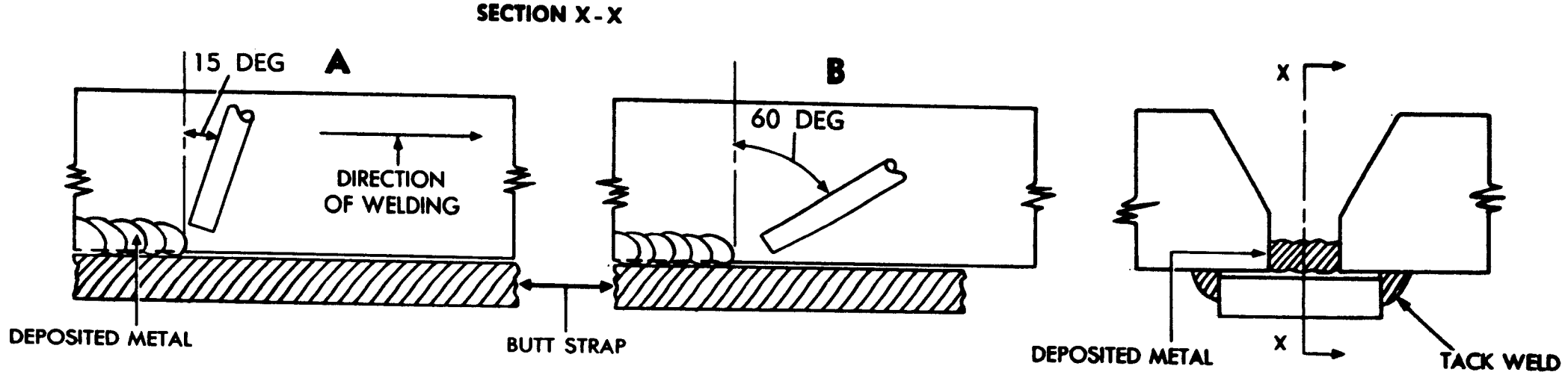

ANGLE OF ELECTRODE AT END OF WEAVE. ELECTRODE HELD ADJACENT TO SIDE WALL FOR GOOD PENETRATION

ANGLE OF ELECTRODE WITH VERTICAL INCREASED AT MIDDLE OF WEAVE TO DIRECT WELD AT PREVIOUSLY DEPOSITED METAL

This welding technique was developed to permit welding a double-tapered single-bevel joint on homogeneous armor plate without welding the butt strap to the deposited weld metal. After depositing the root passes the butt strap can be removed by simply breaking the tack welds holding it to the bottom face of the armor. This welding procedure consists of changing the angle of the electrode in the direction of welding during the side to side weaving motion of the electrode in making the root pass. By increasing the electrode angle to approximately 60 deg with the vertical at the middle of the weave and increasing the speed of weaving, all the metal deposited is welded to the previously deposited metal only. At the end of the weave, the weaving speed of the electrode is decreased while simultaneously decreasing the angle to approximately 15 deg with the vertical and held momentarily to insure good joint side wall penetration. This technique can be mastered with a little practice and has distinct advantages namely:

1. The butt strap can be removed and a finish pass welded to the root of the weld to obtain an all-weld metal joint.

2. In certain sections of the interior of an armored vehicle the presence of a butt strap may materially interfere with the functioning of equipment located nearby.

WE 30483

Figure 9–14. Welding homogeneous armor without welding butt strap to the deposited weld metal.

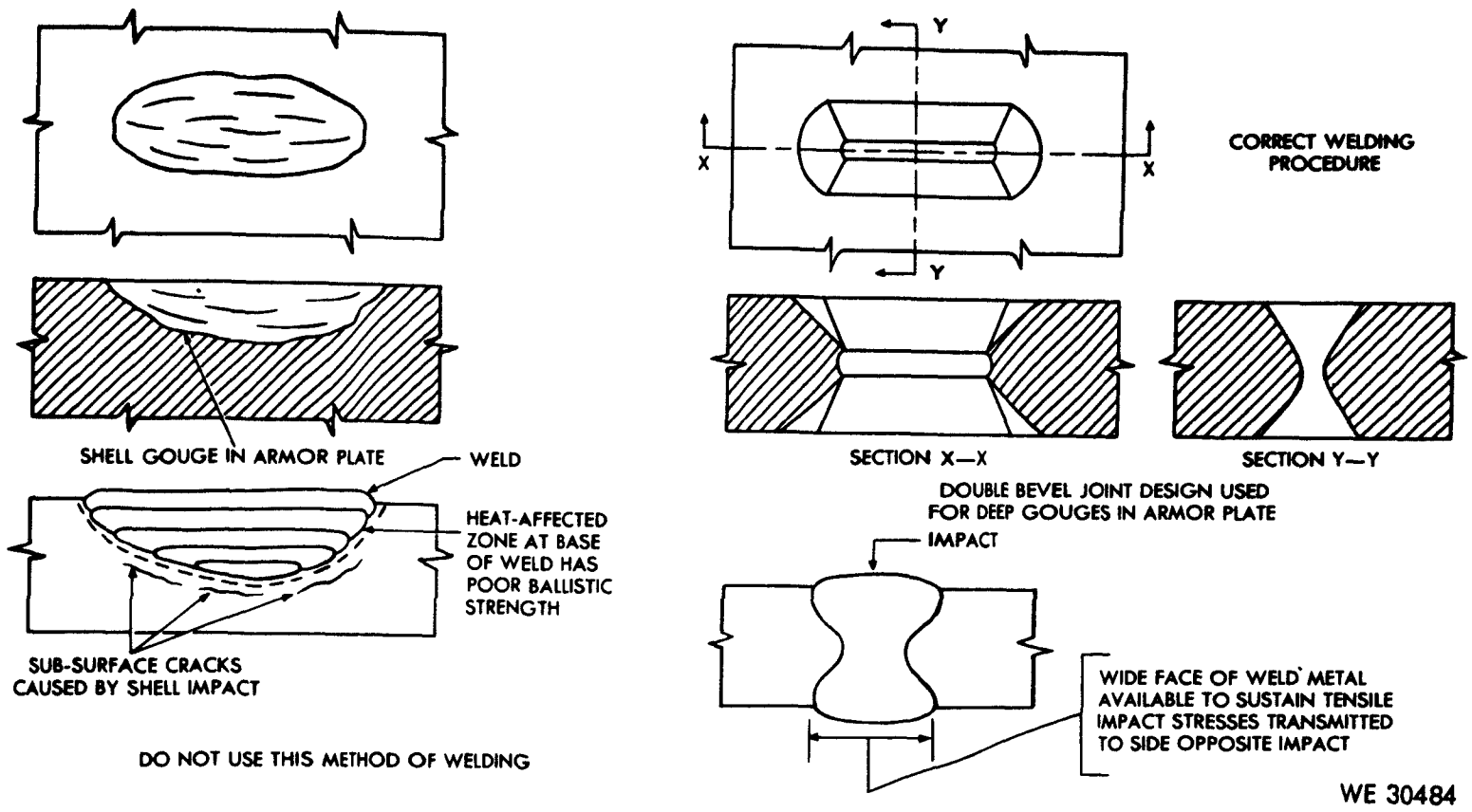
SHELL GOUGE IN ARMOR PLATE
WELD
HEAT-AFFECTED ZONE AT BASE OF WELD HAS POOR BALLISTIC STRENGTH
SUB-SURFACE CRACKS CAUSED BY SHELL IMPACT
DO NOT USE THIS METHOD OF WELDING
Y
X
X
Y
CORRECT WELDING PROCEDURE
SECTION X—X
SECTION Y—Y
DOUBLE BEVEL JOINT DESIGN USED FOR DEEP GOUGES IN ARMOR PLATE
IMPACT
WIDE FACE OF WELD METAL AVAILABLE TO SUSTAIN TENSILE IMPACT STRESSES TRANSMITTED TO SIDE OPPOSITE IMPACT
WE 30484

Figure 9–15. Welding repair of gouges in surface of homogeneous armor plate.

(1) Corner joints can be repaired by using angle iron for butt straps (fig. 9–19). The same procedures are followed in making plug welds as used for repairing cracked armor.

(2) Although the butt strap method is satisfactory for repairing damaged face hardened armor up to 1 inch thick and heavier, it is usually only on thicknesses up to and including ½-inch plate. Another accepted procedure for welding face hardened armor above ½-inch in thickness is a double bevel joint method requiring the soft side to be completely welded before any welding is attempted on the face side of the plate (fig. 9–20). By using string bead welding and the step back and overlap procedure for the root passes, the danger of cracking is held at a minimum. Additional passes can be run straight out; however, no weaving should be used on this type joint in order to keep the structure free from warpage. A modified procedure, known as the depressed joint method, for welding face hardened armor up to and including ½-inch in thickness (fig. 9–21) is made by using a stainless steel bar ⅛ x ¼-inch in cross section. The principal advantages of this joint are its simplicity and good structural and balistic properties. Care should be taken that no welding is done on the hard face side.

c. *Armor Plate Welding Electrodes.*

(1) The most satisfactory method for the repair of homogeneous and face hardened armor plate is in the electric arc welding process with stainless steel electrodes.

(2) The oxy-acetylene welding process requires heating of a large section of the base metal on either side of the prepared joint to maintain a welding puddle of sufficient size at the joint to weld satisfactorily. This heating destroys the heat treatment imparted to armor plate, thus causing large areas to become weak structurally and ballistically. In addition, the procedure is slow and produces considerable warpage in the welded sections.

(3) Initial developments in armor plate welding have specified stainless steel electrodes containing 25 percent chromium and 20 percent nickel. In an effort to conserve chromium and nickel, electrodes containing 18 percent chromium and 8 percent nickel in the core wire and small percentages of either manganese or molybdenum, or both, added in the electro coating, produce excellent results. These

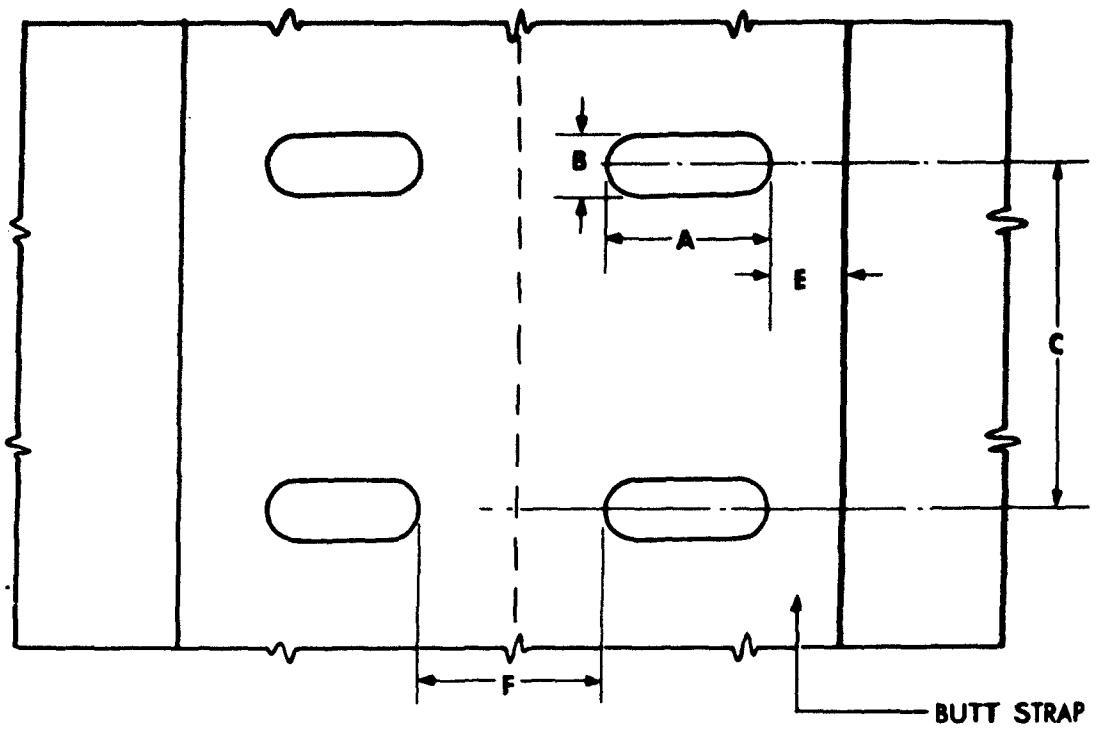

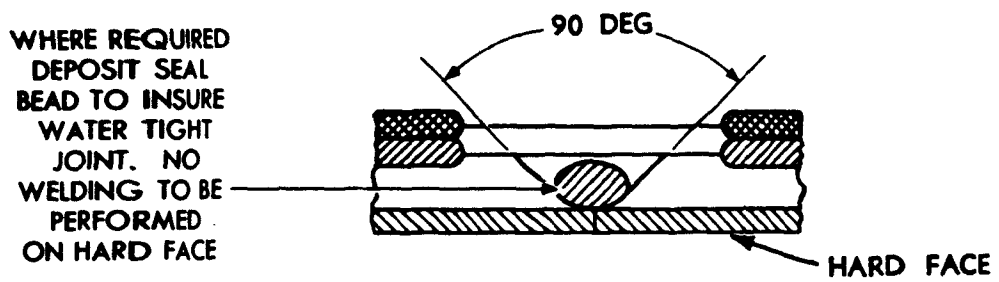

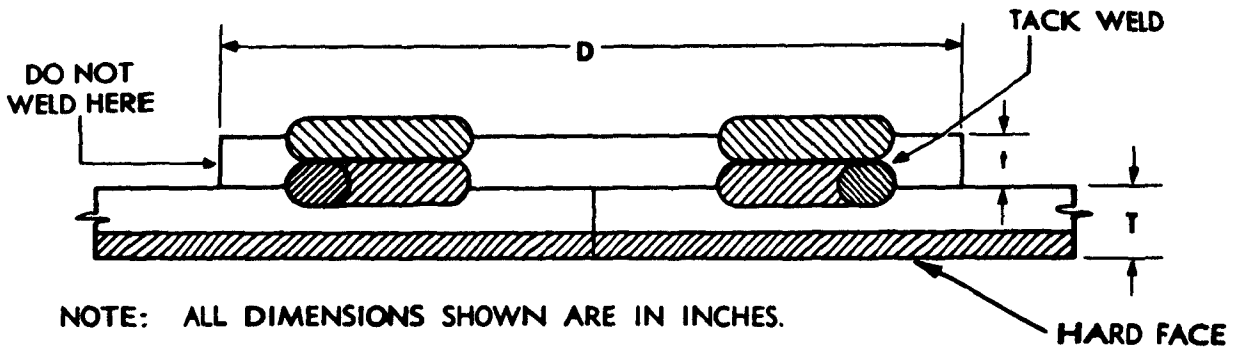

NOTE: ALL DIMENSIONS SHOWN ARE IN INCHES.

T	t	A	B	C	D (min.)	E (min.)	F
1/4	3/16	3/4	7/16	3	3	1/4	1
3/8	1/4	1-1/8	1/2	3	4	3/8	1
1/2	3/8	1-1/4	5/8	3	4-1/4	3/8	1
5/8	3/8	1-1/4	5/8	3	4-1/4	3/8	1
3/4	1/2	1-1/4	5/8	2	4-1/2	7/16	1
1	5/8	1-3/8	3/4	2	4-3/4	1/2	1

WE 30485

Figure 9-16. Welding joint data for butt welds on face hardened armor.

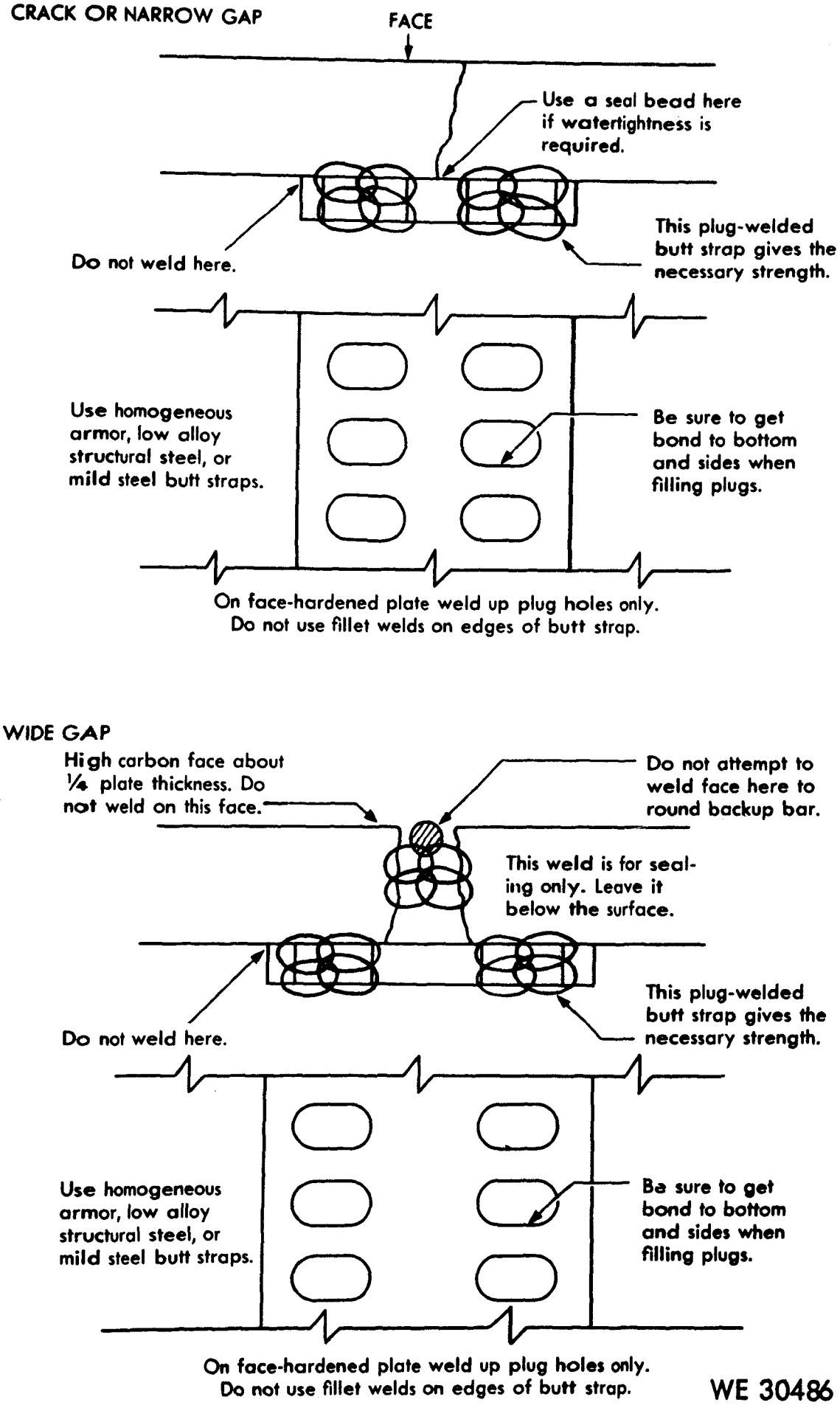
CRACK OR NARROW GAP
FACE
Use a seal bead here if watertightness is required.
Do not weld here.
This plug-welded butt strap gives the necessary strength.
Use homogeneous armor, low alloy structural steel, or mild steel butt straps.
Be sure to get bond to bottom and sides when filling plugs.
On face-hardened plate weld up plug holes only.
Do not use fillet welds on edges of butt strap.
WIDE GAP
High carbon face about 1/4 plate thickness. Do not weld on this face.
Do not attempt to weld face here to round backup bar.
This weld is for sealing only. Leave it below the surface.
Do not weld here.
This plug-welded butt strap gives the necessary strength.
Use homogeneous armor, low alloy structural steel, or mild steel butt straps.
Be sure to get bond to bottom and sides when filling plugs.
On face-hardened plate weld up plug holes only.
Do not use fillet welds on edges of butt strap.
WE 30486

Figure 9–17. Use of butt strap on face hardened armor to repair cracks or gaps.

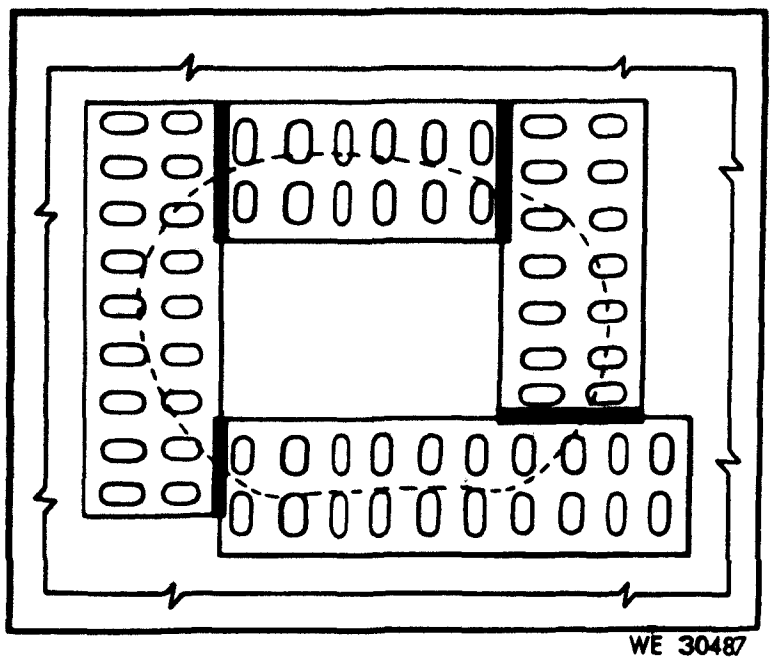

Figure 9–18. Butt strap weld on face hardened armor.

electrodes are recommended for welding all types of armor plate by the electric-arc process without preheating or postheating the structure welded and should be the all welding position type. By convention, these electrodes are known as manganese modified 18–8 stainless and molybdenum modified 18–8 stainless steel electrodes.

d. *Current and Polarity.* The recommended welding current settings listed are for the direct-current, reversed polarity, all position, heavy coated, modified 18–8 stainless steel electrodes. The exact current requirements will be governed to some extent by the joint type, electrode design, and position of welding.

Electrode diameter (in.)	*Current range (amps)*
1/8	90 to 100
5/32	110 to 180

e. *Electrode Requirements.* Field repair units will require the various type electrodes in approximately the following proportions:

Electrode diameter (in.)	*Percentage of electrode*
1/8	20
5/32	60
3/16	20

9–24. Strengthening Riveted Joints in Armor Plate

In order to strengthen riveted joints in armor plate which have been made with button-head rivets, a seal bead weld is recommended (fig. 9–22). The arc is struck at the top of the rivet with a stainless steel electrode and held there for a length of time sufficient to melt approximately ½-inch of the electrode. A bead is then deposited along the curved surface of the rivet to the armor plate and continued around the edge of the rivet until the rivet is completely welded to the armor plate. The seal bead weld prevents the rivet head from being sheared off and the shank of the rivet from being punched through the plate. Countersunk rivets are sealed in the same manner. The rivets in joints made in face hardened armor should be sealed welded only on the soft side of the plate.

Section V. PIPE WELDING

9–25. General

Pipe operating conditions in the handling of oil, gases, water, and other substances range from high vacuum to pressure of several thousands pounds per square inch and mechanical joints are not satisfactory for many of these services. Electric-arc or oxy-acetylene welding provides effective joints in these services and also reduces weight, increases the strength, and lowers the cost of pipe installations.

9–26. Preparation For Welding

a. *Pipe Beveled by Manufacturer.* Pipe to be welded is usually supplied with a single V bevel of 32½ deg with a 1/16-inch root face for pipe thicknesses up to ¾-inch. A single U groove is used for heavier pipe. If the pipe has not been properly beveled or has been cut in the field, it must be beveled prior to welding.

b. *Cutting of Pipe.* This operation is necessary when pipe must be cut to suit a specific length requirement. To insure a leak proof welded joint, the pipe must be cut in a true circle in a plane perpendicular to the centerline of the pipe. This may be accomplished by using a strip of heavy paper, cardboard, leather belting, or sheet gasket material with a straightedge longer than the circumference of the pipe to be welded. The material is

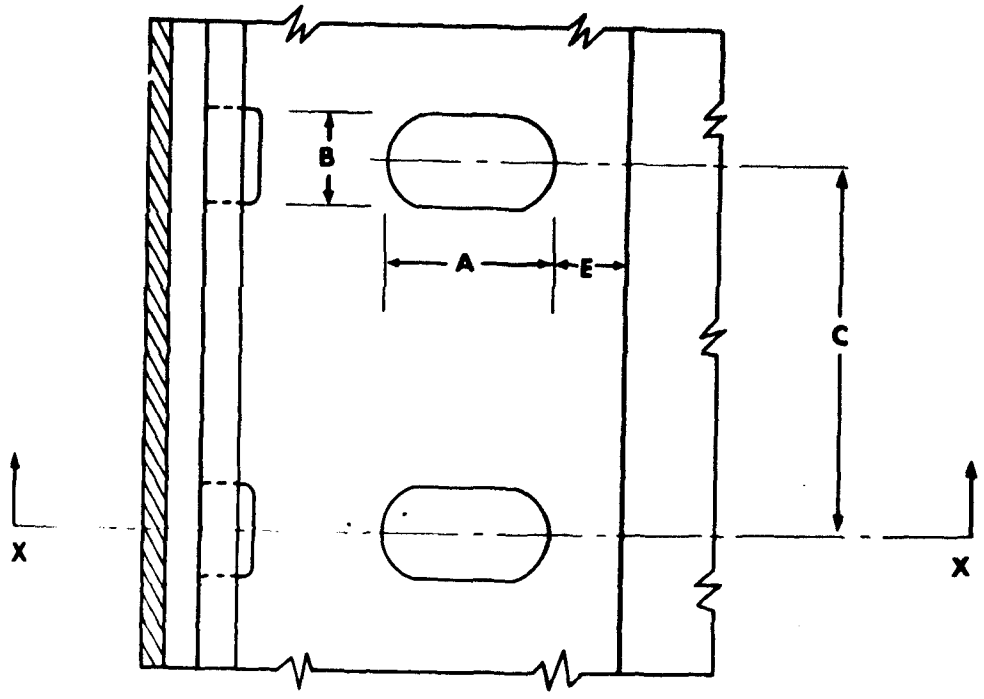

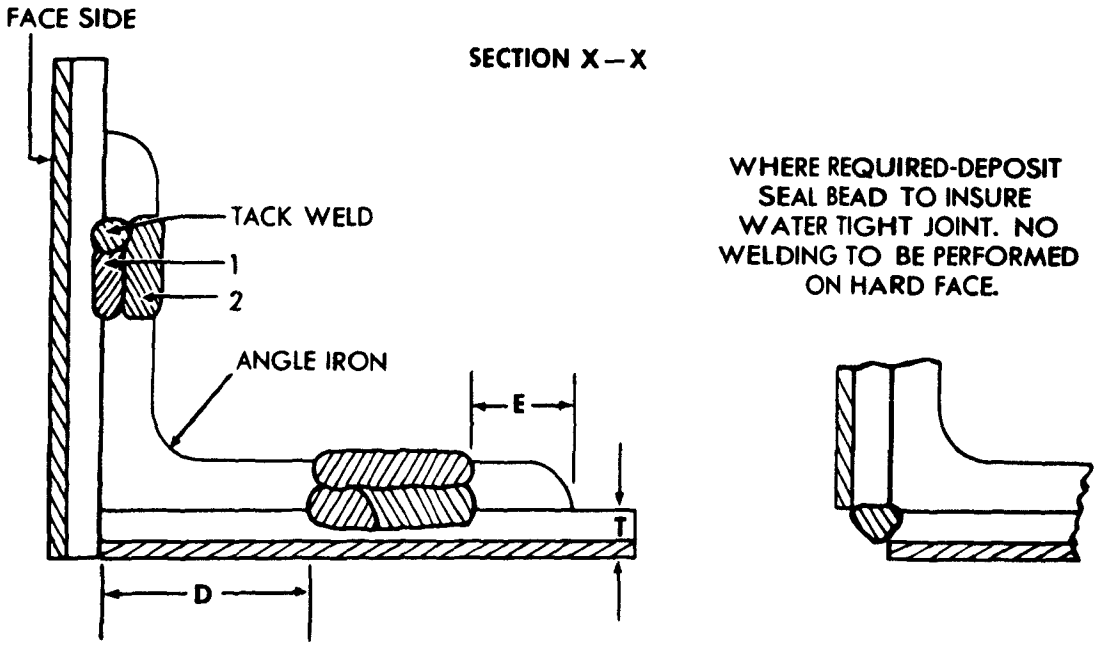

T	A	B	C	D	E (MIN.)	ANGLE IRON
1/4	3/4	7/16	3	5/16	1/4	1-5/16 X 1-5/16 X 3/16
3/8	1-1/8	1/2	3	3/8	3/8	1-7/8 X 1-7/8 X 1/4
1/2	1-1/4	5/8	3	1/2	3/8	2-1/8 X 2-1/8 X 3/8

NOTE: ALL DIMENSIONS SHOWN ARE IN INCHES WE 30488

Figure 9–19. Weld joint data for corner welds on face hardened armor plate.

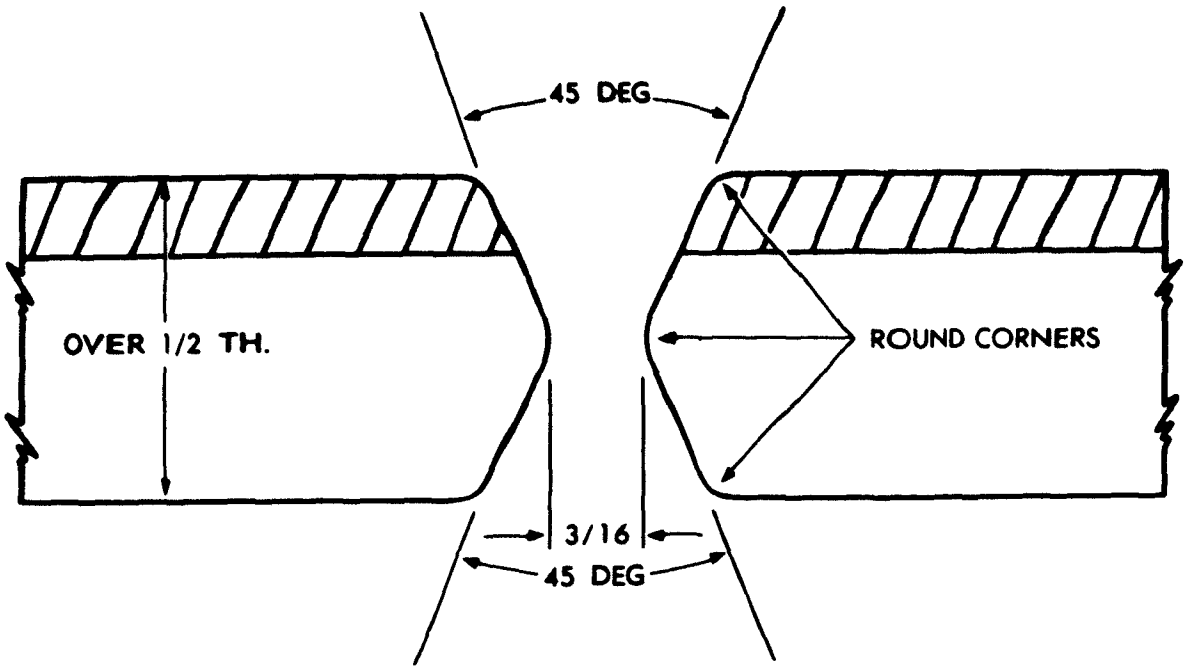

JOINT DESIGN

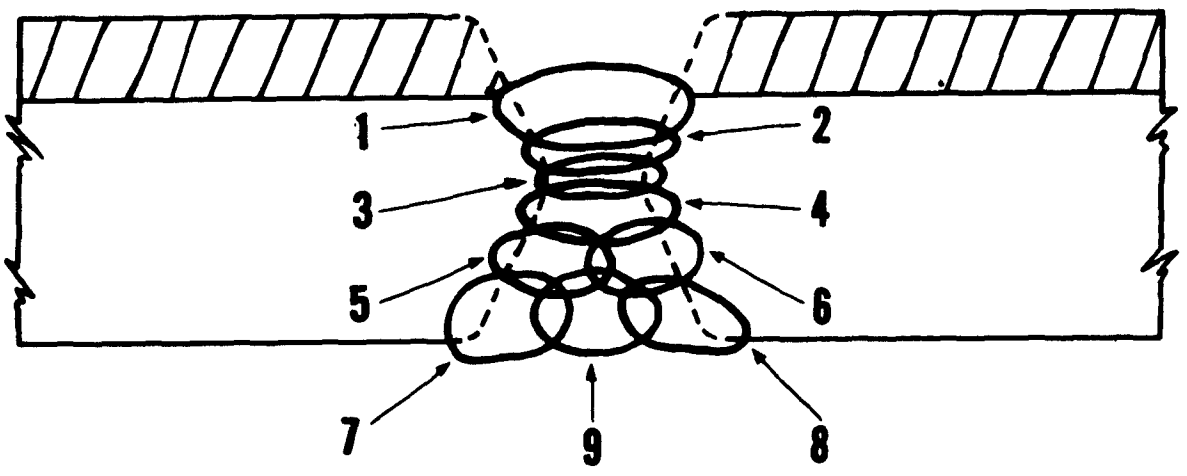

GENERAL SEQUENCE OF WELDING BEADS

Completely weld soft side with Beads No. 1-8. For Bead No.1 - use 1/8 inch electrodes. For all other Beads - use 5/32 and 3/16 inch electrodes. Beads No.6 and annealing beads. Use string bead technique throughout.

NOTE: ALL DIMENSIONS SHOWN ARE IN INCHES. WE 30489

Figure 9-20. Procedure for welding face hardened armor over 1/2 inch thick, using the double bevel joint method.

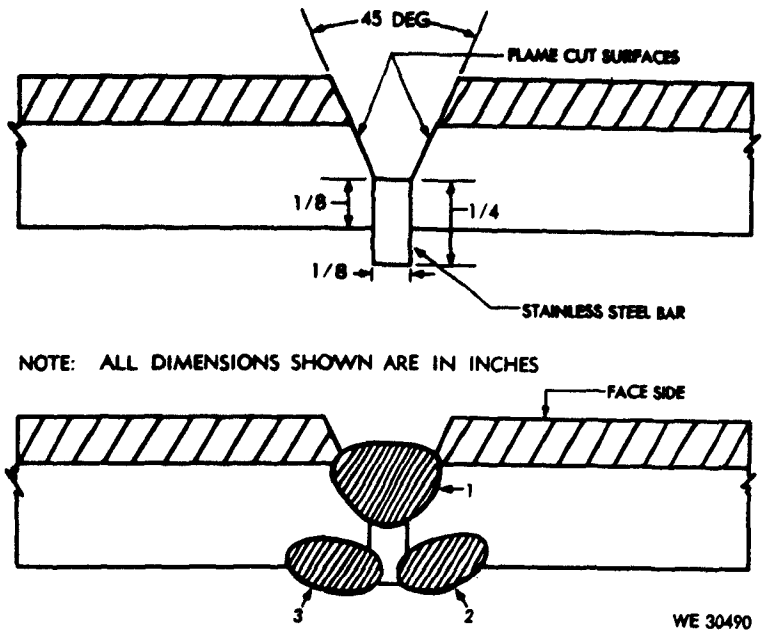

Figure 9–21. Procedure for welding face hardened armor up to 1/2 inch, using the the depressed joint method.

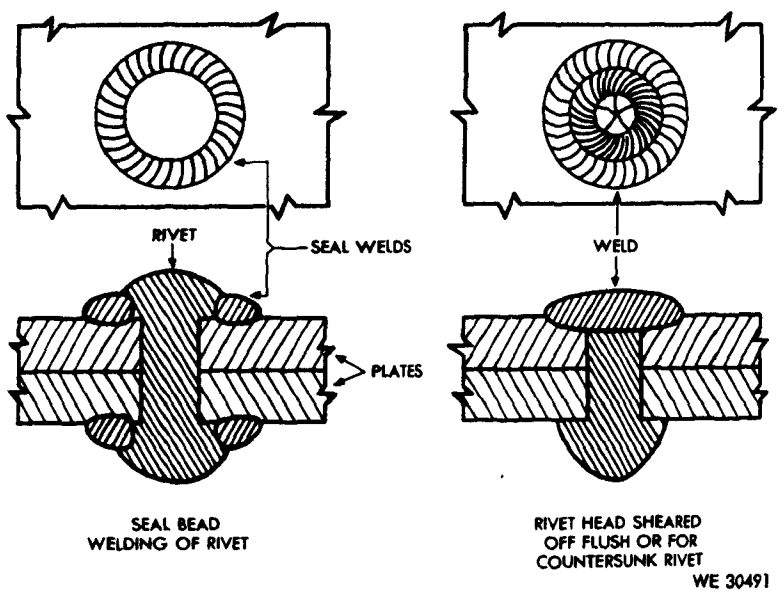

Figure 9–22. Seal bead weld.

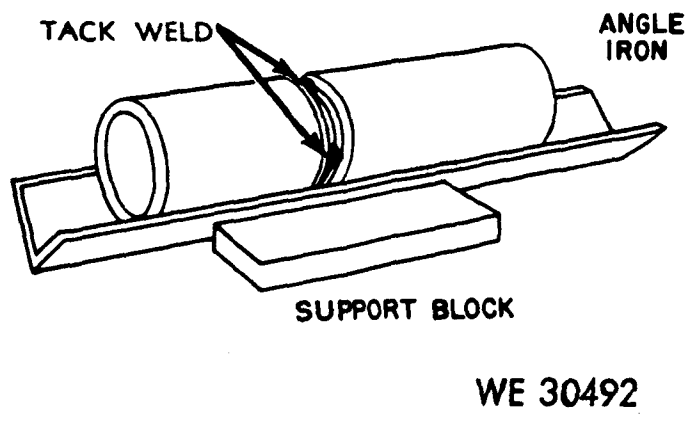

Figure 9–23. Angle iron serving as jig for small diameter pipe.

wrapped around the pipe and overlapped and the pipe marked along the edge of the material with a soakstone pencil. The cut should be made on a 30 to 35 deg bevel with a hand cutting torch and checked with a carpenters square.

c. *Cleaning of Pipe.* After beveling, remove all rust, dirt, scale, or other foreign matter from the outside of the pipe in the vicinity of the weld with a file, wire brush, grinding disk, or other type of abrasive. If the bevels are made by acetylene cutting, the oxide formed must be entirely removed. The inside of the pipe in the vicinity of the weld may be cleaned by a boiler tube and flue cleaner, by sandblasting, by tapping with a hammer with an airblast followup, or by any other suitable method, depending on the inside diameter of the pipe. Care should be taken to clean the scarf faces thoroughly.

d. *Alining the Joint.* A pipe lineup clamp should be used to aline and securely hold the pipe ends preparatory to tack welding. A spacing tool to separate the pipe ends can be made from an old automobile spring leaf. The spacing for oxy-acetylene welding should be approximately ⅛-inch; for arc welding, the spacing will depend on the size of the electrode used for the root pass.

(1) If a pipe lineup clamp is not available, the pipe section should be set in a jig so that their centerlines coincide and the spacing of the pipe ends is uniform prior to tack welding. An angle iron (fig. 9–23) will serve as a jig for small diameter pipe, while a section of channel or I beam will be satisfactory for larger pipe.

(2) When a backing ring (e. below) is used and it is desired to weld to the backing ring, the spacing should not be less than the diameter of the electrode used for the root pass. When welding to the backing ring is not desired, the spacing should not exceed one half the electrode diameter and varies from this diameter to zero, depending on whether a small or large angle of bevel is used.

e. *Backing Rings and Tack Welding.*

(1) The purpose of a backing ring is to make possible the complete penetration of the weld metal to the inside of the pipe without

burning through excessively, also to prevent spattered metal and slag from entering the pipe at the joint, and to prevent the formation of projections and other irregular shaped formations of metal on the inside of the joint. Backing rings also aid materially in securing proper alinement of the pipe ends and, when used, are inserted during assembly of the joint. Backing rings are not used when the pipe service requires a completely smooth inner pipe surface or uniform internal diameter.

(2) There are several types of backing rings, such as: the plain flat strip rolled to fit the inside of the joint; the forged or pressed type (with or without projections); the circumferential rib which spaces the pipe ends the proper distance apart; and the machined ring. All shapes may be of the continuous or split ring types. Several kinds of backing rings are shown in figure 9-24.

(3) Backing rings should be made from metal that is readily weldable. Those used when welding steel pipe are usually of low-carbon steel.

(4) When the pipe ends have been properly alined, four tack welds, one half the thickness of the pipe and equally spaced around the pipe, should be made.

9-27. Pipe Welding Processes

a. *General.* The most commonly used processes for joining pipe are the manual oxy-acetylene process and manual shielded metal-arc process. Automatic and semiautomatic submerged-arc, inert-gas metal-arc, and atomic-hydrogen welding are also used, particularly in shop operations. The manual shielded metal-arc process may be used for welding all metals used in piping systems, whereas manual oxy-acetylene metal-arc welding is generally limited to small sized piping or to welding operations where the clearances around the joints are small. The equipment required for the oxy-acetylene process is also much less expensive and more portable than that required for shielded metal-arc welding.

b. *Shielded Metal-Arc Process.* The shielded metal-arc process can be used for welding pipe materials, such as aluminum, magnesium, and high chromium-nickel alloys that are difficult to weld by other processes. In shielded metal-arc welding the number of passes required for welding ferrous metal piping varies with the pipe thickness, the welding position, the size of the electrode, and the welding current used.

(1) The number of passes required for welding low alloy and low carbon steel pipe depends on the thickness of the pipe, the welding position, the size of the electrode, and the current used but, in general, is approximately one pass for each ⅛-inch of pipe thickness. When welding in the horizontal or rolled position, the number of layers is usually increased 25 to 30 percent and smaller electrodes are used to lessen the heat concentration and to insure complete grain refinement of the weld metal.

(2) The electrodes used vary from ⅛ to 5/16-inch diameter for the first pass, 5/16-inch diameter for the intermediate passes, and up to ¼-inch for the top passes and reinforcement.

c. *Manual Oxy-Acetylene Welding.* The number of passes required for pipe welding with the oxy-acetylene flame depends on the thickness of the pipe, the position of the pipe, and the size of the welding rod used. The thickness of the layer deposited is somewhat more than that deposited by the shielded metal-arc process.

d. *Direction of Welding.*

(1) In manual shielded metal-arc welding, as much welding as possible is done in the flat or downhand position while using suitable power driven equipment for rotating the pipe at a speed consistent with the speed of welding. When the pipe is in a fixed horizontal position, the weld is usually made from the bottom upward, although with thin or medium thickness pipe, the welding is done downward. More metal is deposited when welding upward and complete grain refinement is easier to achieve; also, welding downward requires a much higher degree of manual skill.

(2) When the pipe is in a fixed vertical position, it is customary to deposit the filler metal in a series of overlapping string beads, using ⅛-inch maximum electrodes, and allowing 25 to 30 beads per square inch of weld area.

(3) When welding by the oxy-acetylene process, the directions of welding as described above will, in general, apply. A noticeable

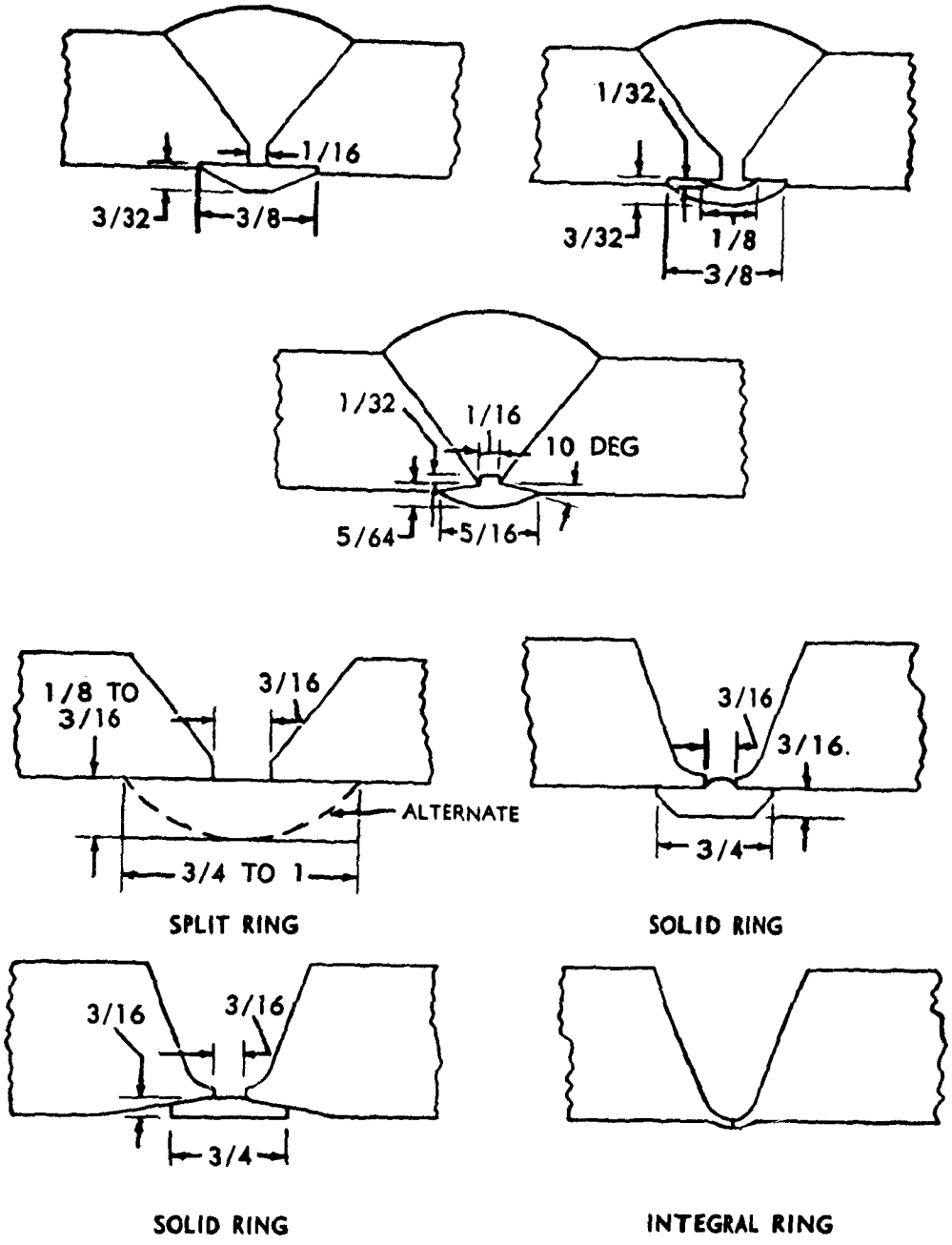

Figure 9–24. Types of backing rings.

variation in welding technique is that when welding downward, backhand welding is used, and when welding upward, forehand welding is used.

9–28. Pipe Welding Procedures

a. *Horizontal Pipe Rolled Weld.*

(1) Aline the joint and tack weld or hold in position with steel bridge clamps with the pipe mounted on suitable rollers (fig. 9–25). Start welding at point C, figure 9–25, progressing upward to point B. When B (fig. 9–25) is reached, rotate the pipe clockwise until the stopping point of the weld is at point C and again weld upward to point B. When the pipe is being rotated, the torch should be held between B and C and the pipe rotated past it.

(2) The position of the torch at A (fig. 9–25) is similar to that for a vertical weld. As B is approached, the weld assumes a nearly flat position and the angles of application of the torch and rod are altered slightly to compensate for this change.

(3) The weld should be stopped just before the root of the starting point, so that a small opening remains. The starting point is then reheated, so that the area surrounding the junction point is at a uniform temperature.

This will insure a complete fusion of the advancing weld with the starting point.

(4) If the side wall of the pipe is more than ¼-inch in thickness, a multipass weld should be made.

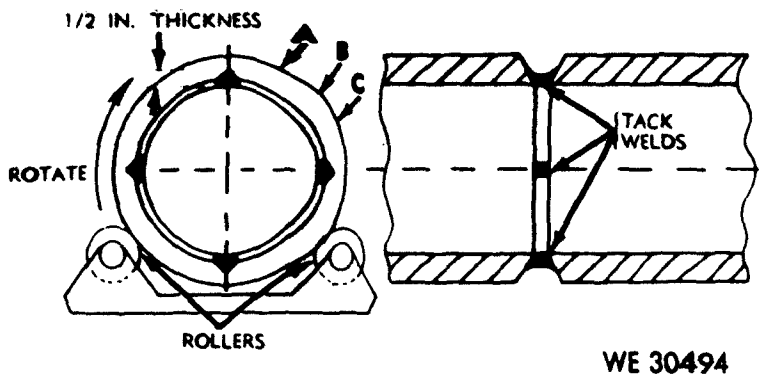

Figure 9–25. Diagram of tack weld pipe on rollers.

b. *Horizontal Pipe Fixed Position Weld.*

(1) After tack welding, the pipe is set up approximately so, and when welding has been started, the pipe must not be moved in any direction.

(2) When welding upward, the weld is made in two steps. Start at the bottom (A, fig. 9–26) at a point midway between two tack welds and work up one side (1, fig. 9–26) to the top at point B. Return to bottom and work up the other side (2, fig. 9–26) to point B. The operator must take special care to obtain complete fusion at the starting and finishing point of the weld. The exposed face of the starting point of the first half of the weld should be sloped, so that the puddle for the second half can be conveniently started, and this is also true of the finishing end of the first half, which must be completely fused to the finishing end of the second half of the weld.

(3) When welding downward, the weld is also made in two stages. Start at the top (fig. 9–27) and work down one side (1, fig. 9–27) to the bottom then return to the top and work down to the other side (2, fig. 9–27) to join with the previous weld at the bottom. The welding downward method is particularly effective with arc welding, since the higher temperature of the electric arc makes possible the use of greater welding speeds. With arc welding, the speed is approximately three times that of the upward welding method.

(4) Welding by the backhand method is used for joints in low carbon or low alloy steel piping that can be rolled or is in a horizontal position. One pass is used for wall thicknesses not exceeding ⅜-inch, two passes for wall thicknesses ⅜ to ⅝-inch, three passes for wall thicknesses ⅝ to ⅞-inch, and four for wall thicknesses ⅞ to 1⅛-inches.

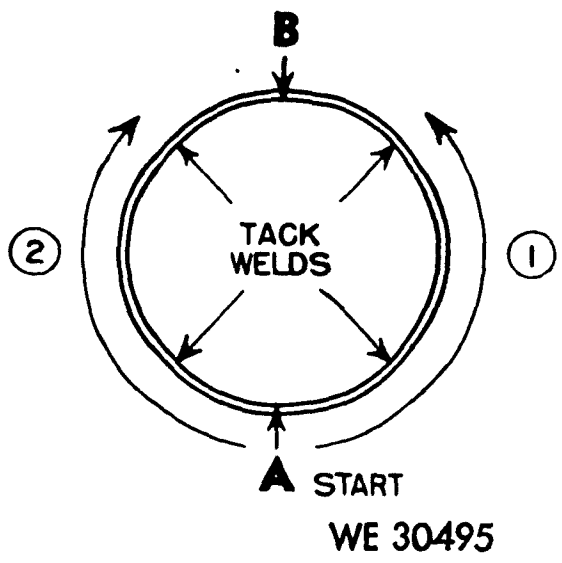

Figure 9–26. Diagram of horizontal pipe weld with uphand method.

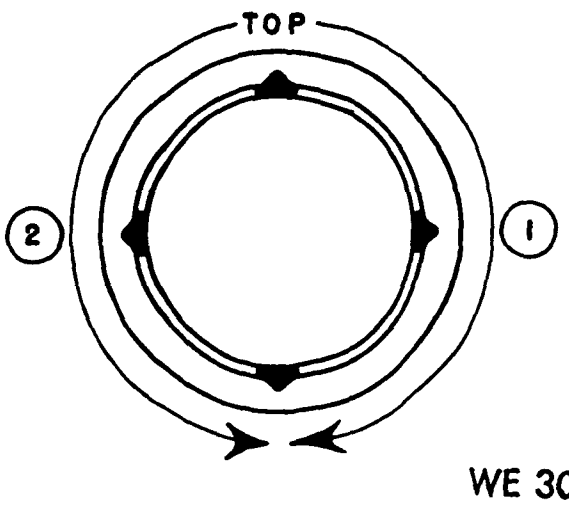

Figure 9–27. Diagram of horizontal pipe weld with downhand method.

c. *Vertical Pipe Fixed Position Weld.* Pipe in this position, wherein the joint is horizontal, is most frequently welded by the backhand method (fig. 9–28). The weld is started at the tack and carried continuously around the pipe.

d. *Multipass Arc Welding.*

(1) *ROOT BEADS.* If a lineup clamp is used, the root bead (A, fig. 9–29) is started at the bottom of the groove while the clamp is in position. When no backing ring is used, care

should be taken to build up a slight bead on the inside of the pipe. If a backing ring is used, the root bead should be carefully fused to it. As much root bead as the bars of the lineup clamp will permit should be applied before the clamp is removed. Complete the bead after the clamp is removed.

(2) *FILLER BEADS.* Care should be taken that the filler beads (B, fig. 9–29) are fused into the root bead, in order to remove any undercut caused by the deposition of the root bead. One or more filler beads around the pipe usually will be required.

(3) *FINISH BEADS.* The finish beads (C, fig. 9–29) are applied over the filler beads to complete the joint. Usually, this is a weave bead about 5/8-inch wide and approximately 1/16-inch above the outside surface of the pipe when complete. The finished weld is shown at D, figure 9–29.

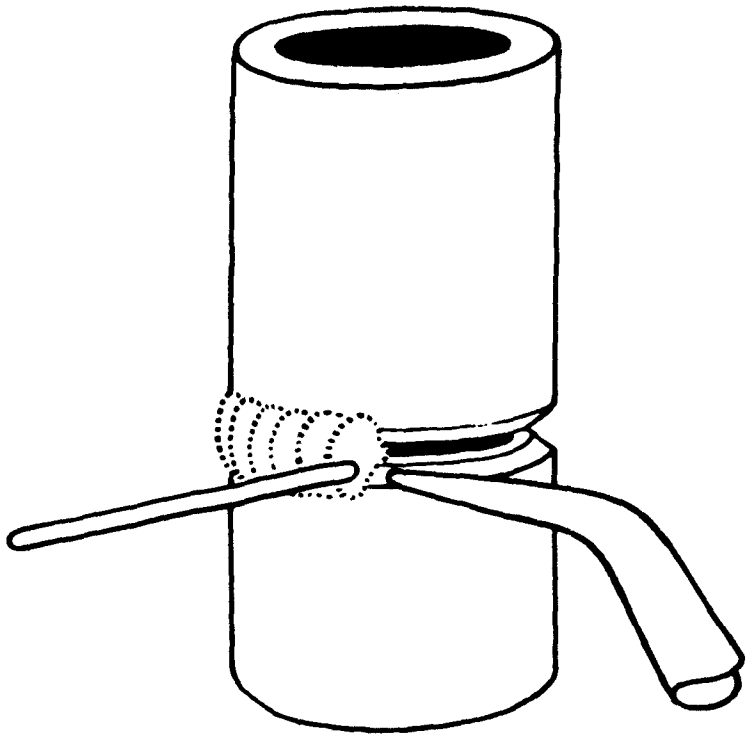

Figure 9–28. Vertical pipe fixed position weld with backhand method.

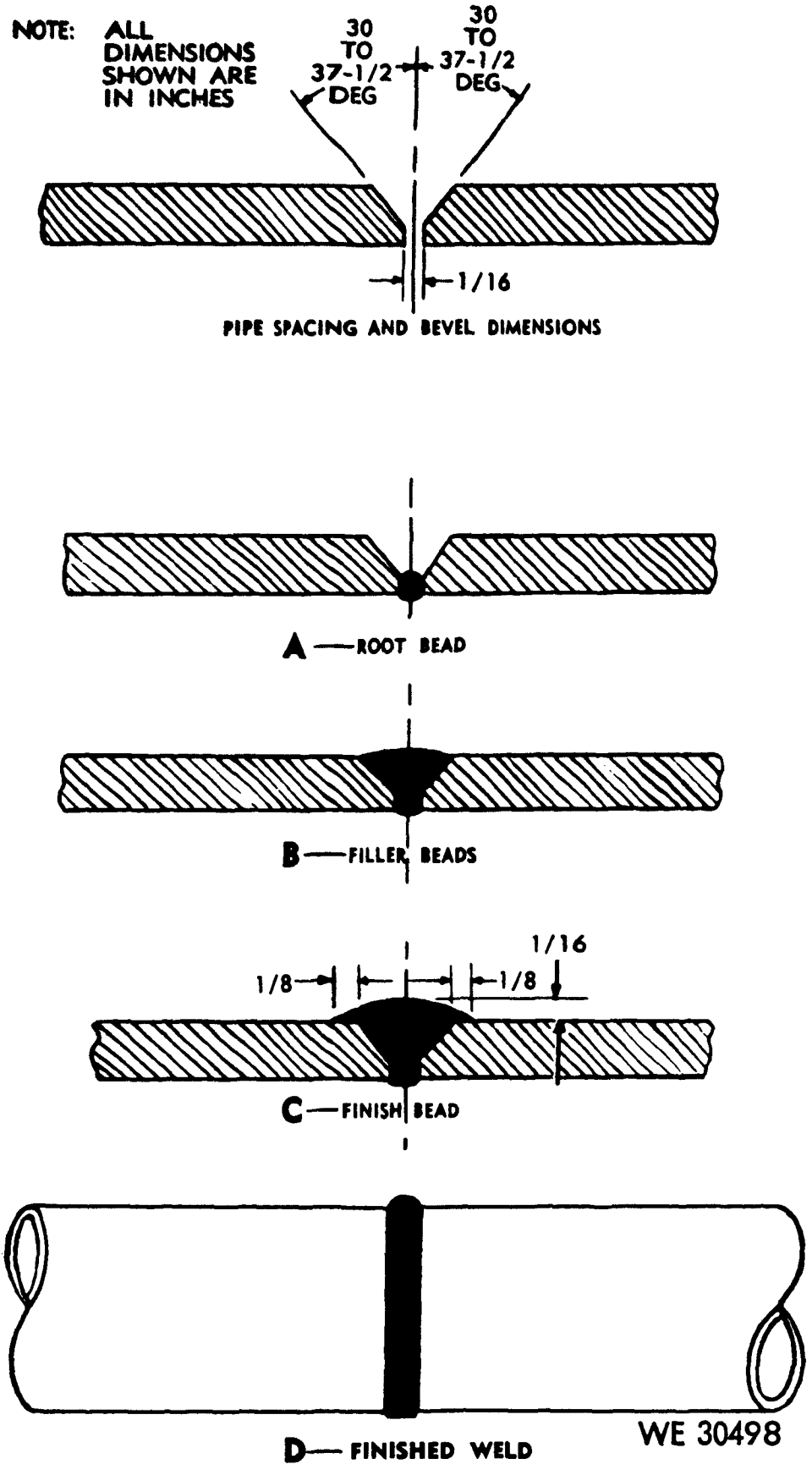

Figure 9–29. Deposition of root, filler, and finish weld beads.

CHAPTER 10

TESTING OF WELDS

Section I. PERFORMANCE TESTING

10–1. General

In order to insure the satisfactory performance of a welded structure, the quality of the welds must be determined by adequate testing procedure. They are therefore proof tested under conditions that are the same or more severe than those encountered by the welded structures in the field. These tests reveal weak or defective sections that can be corrected before the materiel is released for use in the field. The tests also determine the proper welding design for ordnance equipment and forestall injury and inconvenience to personnel and untimely failure of materiel.

10–2. Testing of Military Materiel

a. Weapons can be proof tested by firing from cover with an extra heavy charge to determine the safety of the welded piece.

b. Automotive materiel can be tested at high speeds over rough ground to determine its road safety.

c. Welded armor plate and other heavy structural members can be tested by gunfire with projectiles of various calibers to determine their strength under shock.

d. Other similar tests are used to check the performance of completed structures; however, because the piece of materiel may consist of several types of metals, welded with various filler metals, the successful operation of the entire structure requires that each weld must be able to withstand the particular load for which it is designed. For this reason, a number of physical tests have been devised to determine the strength and other characteristics of the welds used in the structure. These physical tests are described in section II of this chapter.

10–3. Field Inspection of Welds and Equipment Repaired by Welding

a. *General.* A definite procedure for the testing of welds is not set up as a part of normal routine of ordnance units operating under field conditions. If facilities are available, some of the testing methods described in section II may be instituted. In general, however, the item welded is subjected to a thorough visual examination by a qualified inspector, and if found to be satisfactory, it is then returned to the using arms or service.

b. *Inspection Procedure.* The finished weld should be inspected for undercut, overlap, surface checks, cracks, or other defects. Also, the degree of penetration and side wall fusion, extent of reinforcement, and size and position of the welds are important factors in the determination as to whether a welding job should be accepted or rejected because they all reflect the quality of the weld.

c. *Destructive Tests of Experimental Welds.* If special circumstances require the use of new or novel welding procedure, new welding material, or unfamiliar apparatus, and when welding operators lack experience in their use, it is advisable to make experimental welds with scrap or unsalvageable material and to subject these welds or welded material to destructive tests. The required development of procedure and familiarity with equipment can be attained in this manner.

d. *Performance Tests.* When materiel has been repaired by standard welding procedures, visual inspection should be sufficient to determine the efficiency of the weld; however, after the repaired item has been returned to the

using arm or service, the latter should subject the item to such practical tests as are necessary to prove its ability to withstand the strains and stresses of normal service. This will involve the towing or driving of mobile materiel over terrain that it is normally expected to traverse and the firing of artillery pieces to insure that the repair will not break down under the forces of recoil. In most cases, the item can be placed in service with instructions to the using personnel to make one or more thorough inspections after the item has been in service a short time and to report signs of possible failure or unsatisfactory performance. Defective repaired parts can, in this way, be detected before serious trouble results.

Section II. PHYSICAL TESTING

10–4. General

a. The tests described below have been developed to check the skill of the welding operator as well as the quality of the weld metal and the strength of the welded joint for each type of metal used in ordnance materiel.

b. Some of these tests, such as the tensile and bending tests, are destructive, an that the tests specimens are loaded until they fail in order that the desired information can be gained. Other testing methods, such as the X-ray and hydrostatic tests, are not destructive.

10–5. Acid Etch Test

a. This test is used to determine the soundness of a weld. The acid attacks or reacts with the edges of cracks in the base or weld metal and discloses weld defects if present. It also accentuates the boundary between the base and weld metal and, in this manner, shows the size of the weld which may otherwise be indistinct. This test is usually performed on a cross section of the joint.

b. Solutions of hydrochloric acid, nitric acid, ammonium persulphate, or iodine and potassium iolide are commonly used for etching carbon and low alloy steels.

10–6. Guided Bend Test

The quality of the weld metal at the face and root of the welded joint, as well as the degree of penetration and fusion to the base metal, are determined by means of guided bend tests. These tests are made in a jig (fig. 10–1). These tests specimens are machined from welded plates, the thickness of which must be within the capacity of the bending jig. The test specimen is placed across the supports of the die which is the lower portion of the jig. The plunger, operated from above by a hydraulic jack or other device, causes the specimen to be forced into and to assume the shape of the die. To fulfill the requirements of this test specimen must bend 180 deg and, to be accepted as passible, no cracks, greater than ⅛-inch in any dimension should appear on the surface. The face bend tests are made in the jig with the face of the weld in tension (i.e., on the outside of the bend) (A, fig. 10–2). The root bend tests are made with the root of the weld in tension (i.e., on the outside of the bend B, fig. 10–2). Guided bend test specimens are also shown in figure 10–3.

10–7. Free Bend Test

a. The free bend test has been devised to measure the ductility of the weld metal deposited in a weld joint. A test specimen is machined from the welded plate with the weld located as shown at A, figure 10–4. Each corner lengthwise of the specimen shall be rounded in a radius not exceeding one tenth of the thickness of the specimen. Tool marks, if any, shall be lengthwise of the specimen. Two scribed lines are placed on the face 1/16-inch in from the edge of the weld. The distance between these lines is measured in inches and recorded as the initial distance X (B, fig. 10–4). The ends of the test specimen are then bent through angles of about 30 deg, these bends being approximately one-third of the length in from each end. The weld is thus located centrally, to insure that all of the bending occurs in the weld. The initially bent specimen is then placed in a machine capable of exerting a large compressive force (C, fig. 10–4) and bent until a crack or cracks greater than 1/16-inch appear in any dimension on the face of the weld. If no cracks appear, bending is continued until the specimens ¼-inch thick

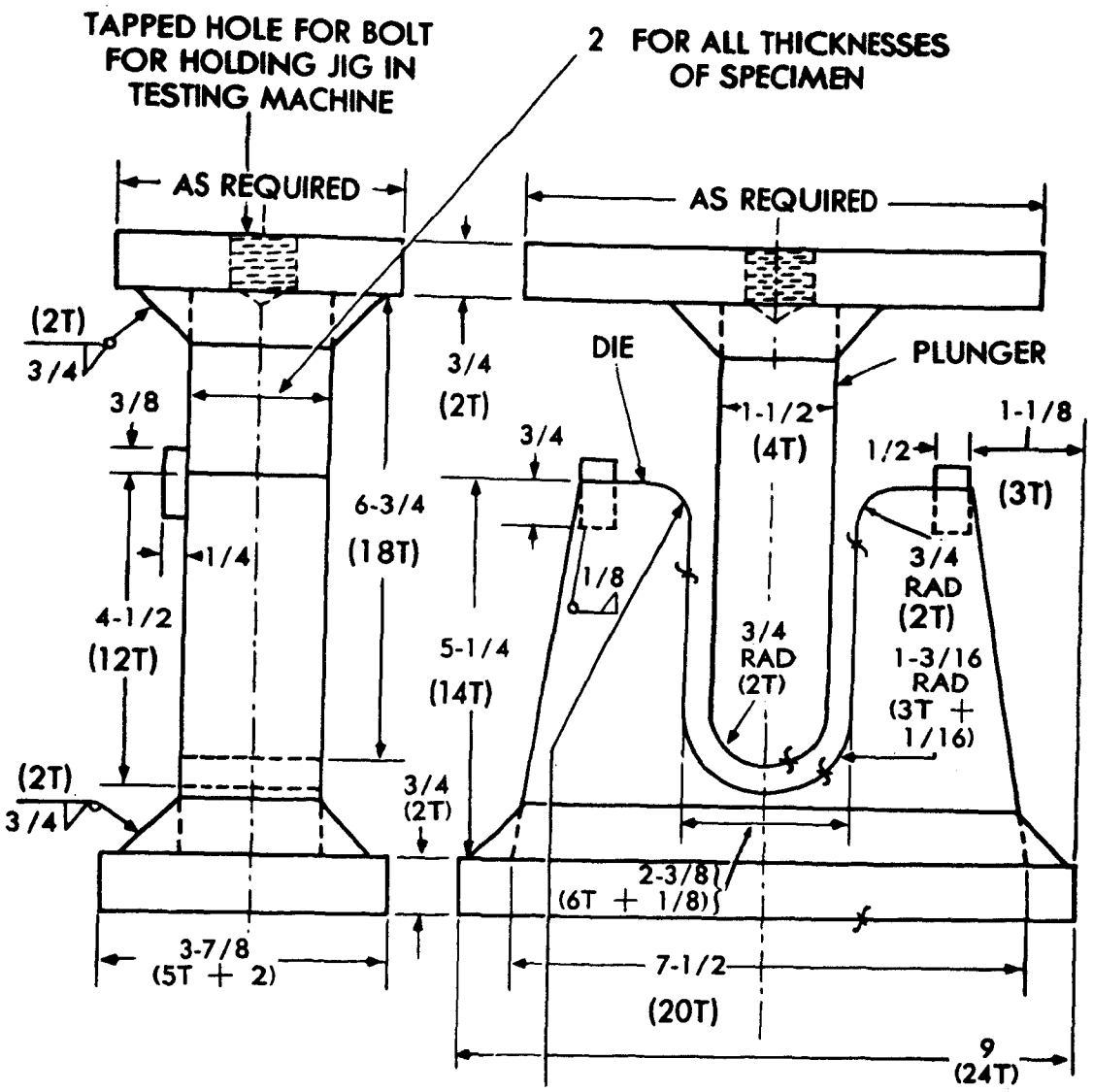

NOTES:

1—T = TEST PLATE THICKNESS
2—HARDENED ROLLS MAY BE USED ON SHOULDERS IF DESIRED
3—SPECIFIC DIMENSIONS FOR 3/8 PLATE
4 —ALL DIMENSIONS SHOWN ARE IN INCHES

WE 30499

Figure 10–1. Guided bend test jig.

or under can be tested in a vise. Heavier plate is usually tested in a press or bending jig. Whether a vise of other type of compression device is used when making the free bend test, it would be advisable to machine the upper and lower contact plates of the bending equipment so as to present surfaces parallel to the ends of the specimen (E, fig. 10–4). This will prevent the specimen from slipping as it is bent and snapping out of the testing machine.

b. After bending the specimen to the point where the test bend is concluded, the distance between the scribed lines on the specimen is again measured and recorded as the distance Y. To find the percentage of elongation, subtract the initial from the final distance, divide by the initial distance, and multiply by 100 (see formula fig. 10–4). The usual requirements for passing this test are that the minimum elongation be 15 percent and that no cracks greater than 1/16 inch in any dimension exist on the face of the weld.

c. The free bend test is being largely replaced by the guided bend test where the required testing equipment is available.

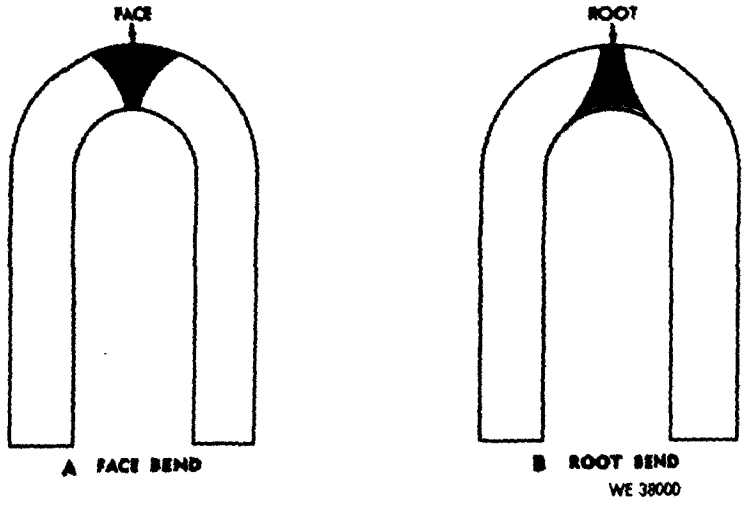

Figure 10–2. Guided bend test specimens.

10–8. Back Bend Test

The back bend test is used to determine the quality of the weld metal and the degree of penetration into the root of the Y of the welded butt joint. The specimens used are similar to those required for the free bend test (par. 10–6) except that they are bent with the root of the weld on the tension side (outside). The specimens tested are required to bend 90 deg without breaking apart. This test is being largely replaced by the guided bend test (par. 10–5).

10–9. Nick Break Test

a. The nick break test has been devised to determine if the weld metal of a welded butt joint has any internal defects, such as slag inclusions, gas pockets, poor fusion, and/or oxidized or burnt metal. The specimen is obtained from a welded butt joint either by machining or by cutting with an oxy-acetylene torch. Each edge of the weld at the joint is slotted by means of a saw cut through the center (fig. 10–5). The piece thus prepared is bridged across two steel blocks (fig. 10–5) and struck with a heavy hammer until the section of the weld between the slots fractures. The metal thus exposed should be completely fused and free from slag inclusions. The size of any gas pocket must not be greater than 1/16-inch across the greater dimension and the number of gas pockets or pores, per square inch, should not exceed six.

b. Another break test method is used to determine the soundness of fillet welds. This is

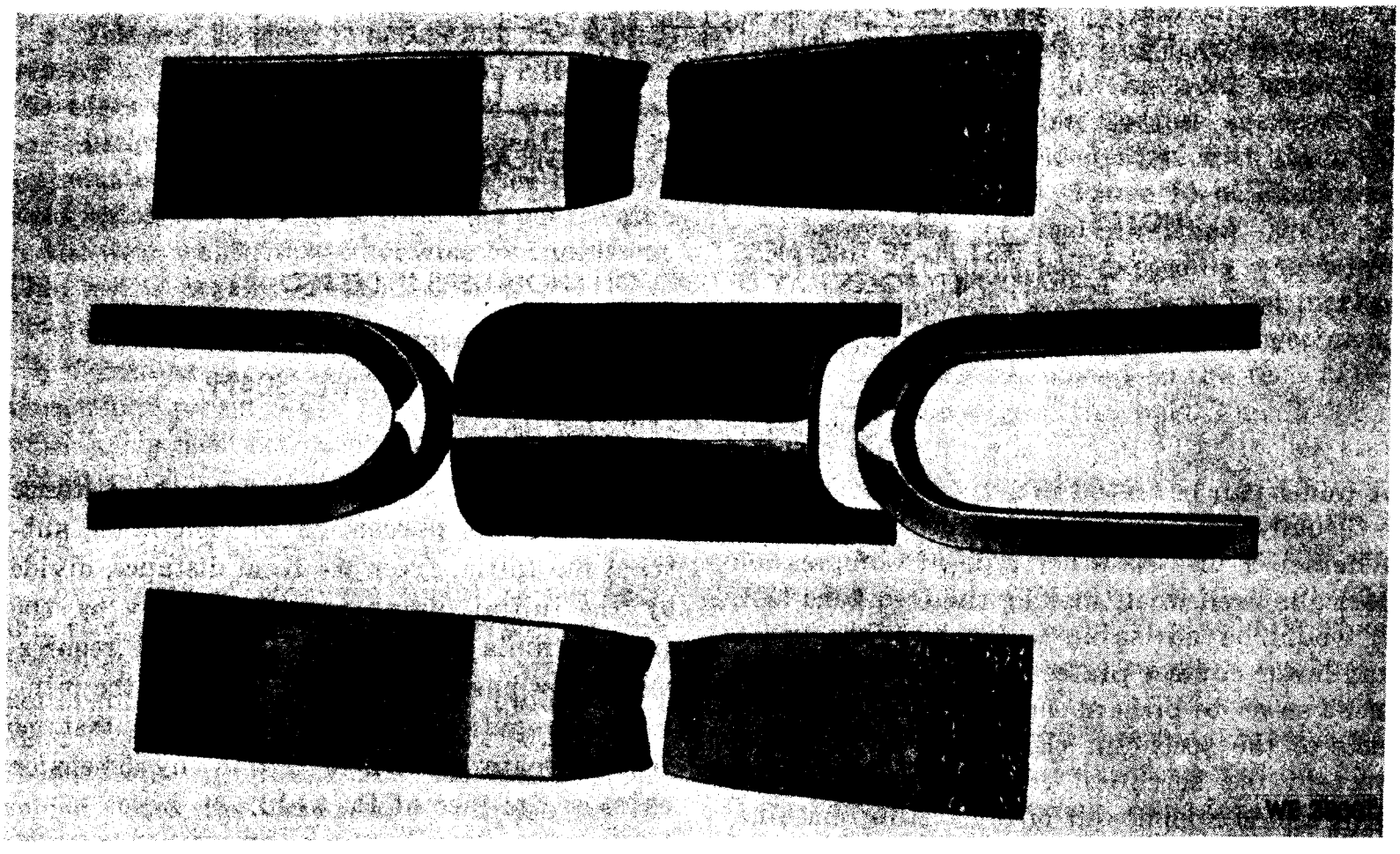

Figure 10–3. Guided bend and tensile strength test specimens.

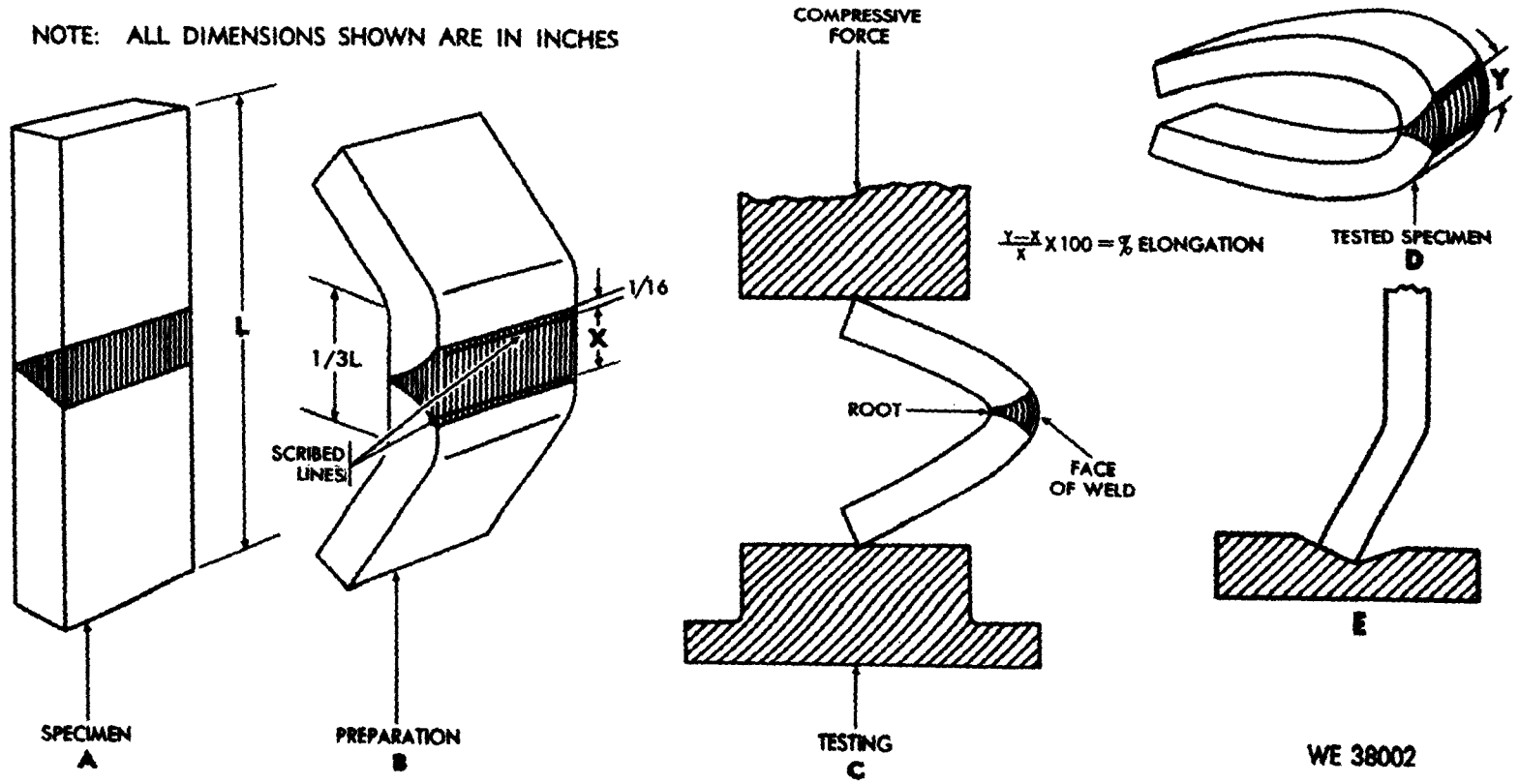

Figure 10–4. Free bend test of welded metal.

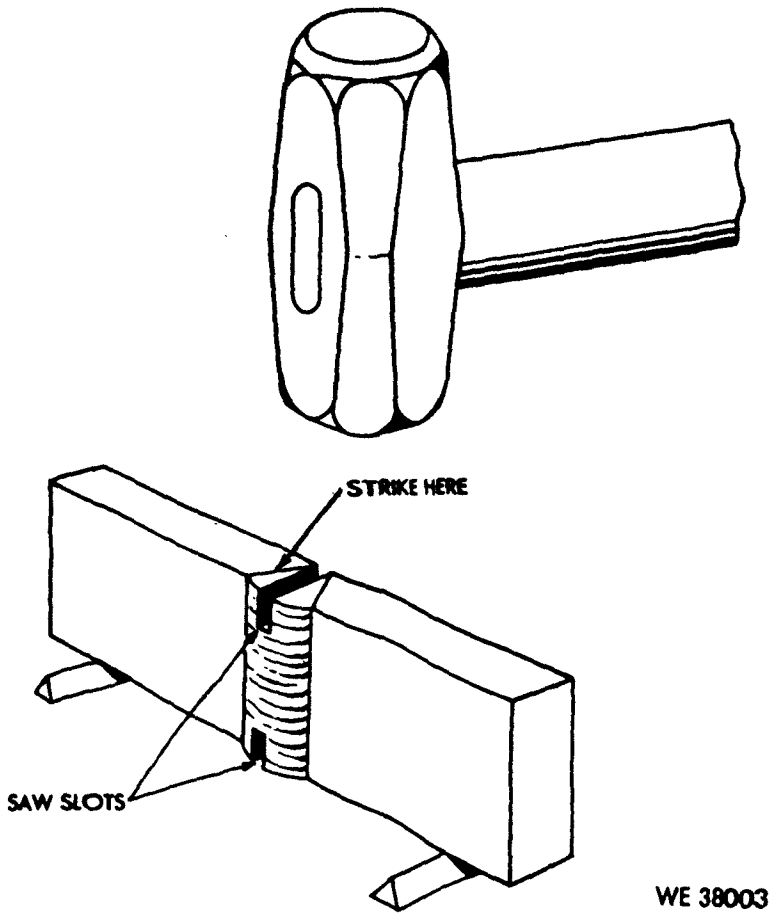

WE 38003

Figure 10–5. Nick break test.

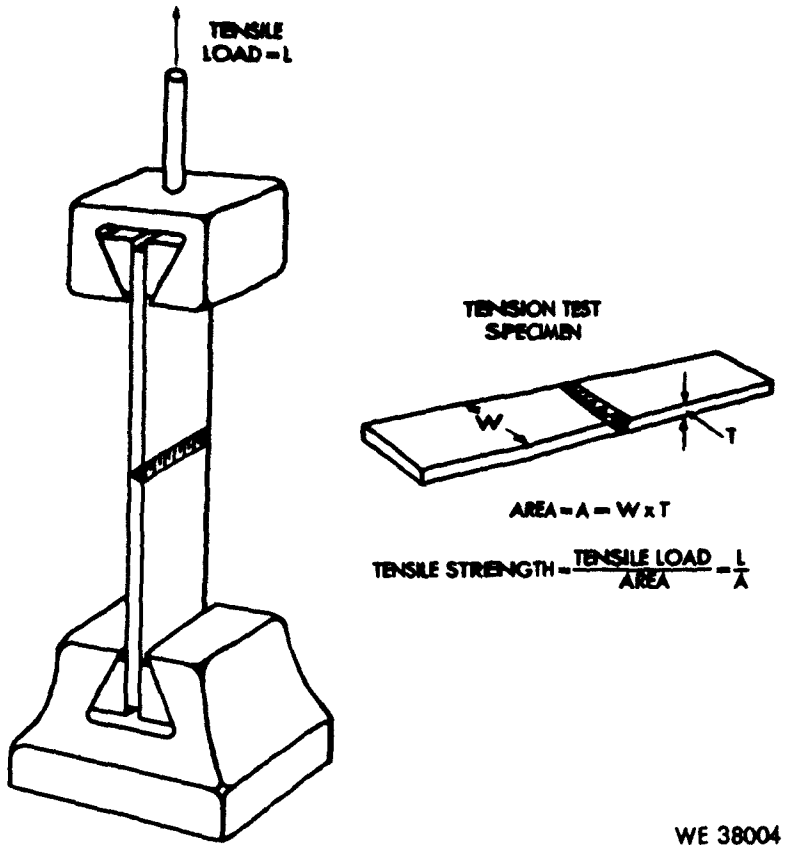

WE 38004

Figure 10–6. Tension test specimen and test method.

the fillet weld break test. A force, by means of a press, a testing machine, or blows of a hammer, is applied to the apex of the V shaped specimen until rupture of the fillet weld occurs. The surfaces of the fracture will then be examined for soundness.

10–10. Tensile Strength Test

a. This test is used to measure the strength of a welded joint. A portion of a welded plate is so machined as to locate the weld midway between the jaws of the testing machine (fig. 10–6). The width and thickness of the test specimen are measured before testing, and the area in square inches is calculated by multiplying these two figures (see formula, fig. 10–6). The tensile test specimen is then mounted in a machine that will exert a pull on the piece sufficient to break the specimen. The testing machine may be either a stationary or a portable type. A machine of the portable type, operating on the hydraulic principle and capable of pulling as well as bending test specimens, is shown in figure 10–7. As the specimen is being tested in this machine, the load in pounds is registered on the gage. In the stationary types, the load applied may be registered on a balancing beam. In either case, the load at the point of breaking is recorded. Test specimens broken by the tensil strength test are shown in figure 10–3.

b. The tensile strength, which is defined as stress (pounds per square inch), is calculated by dividing the breaking load of the test piece by the original cross section area of the specimen. The usual requirements for the tensile strength of welds is that the specimen shall pull not less than 90 percent of the base metal tensile strength.

c. The shearing strength of transverse and longitudinal fillet welds is determined by tensile stress on the test specimens. The width of the specimen is measured in inches. The specimen is ruptured under tensile load, and the maximum load in pounds is determined. The shearing strength of the welds in pounds per linear inch is determined by dividing the maximum load by the length of fillet weld that ruptured. The shearing strength in pounds per square inch is obtained by dividing the shearing strength in pounds per linear inch by the average throat dimension of the welds in

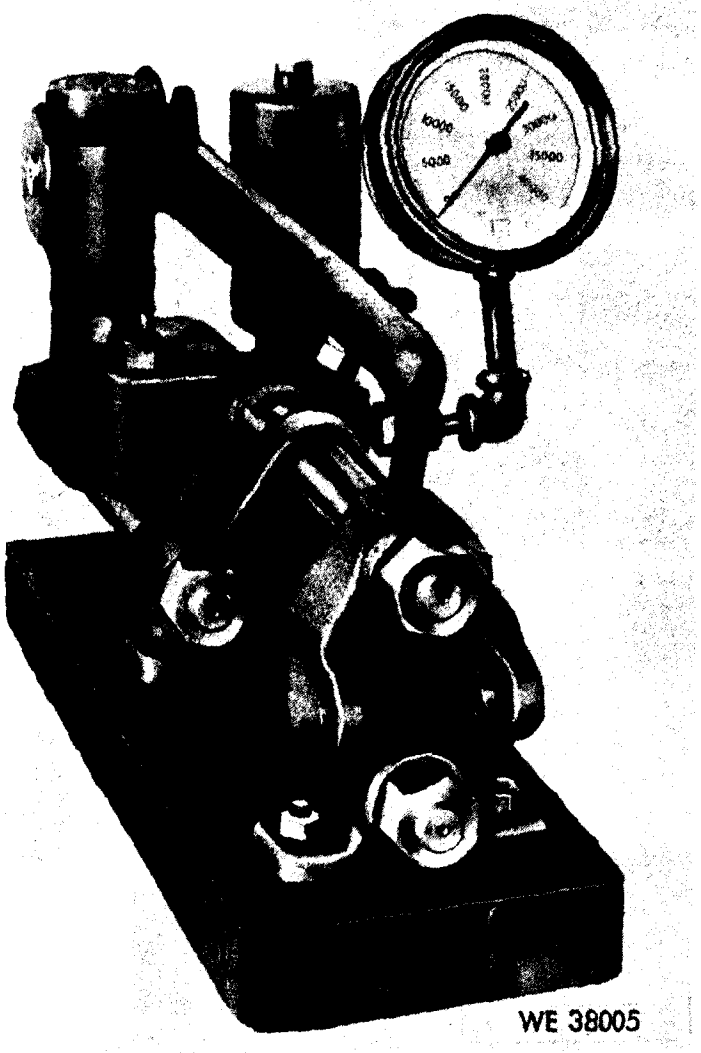

Figure 10–7. Portable tensile and bend testing machine.

inches. The test specimens are made wider than required and machined down to size.

10–11. Hydrostatic Test

This is a nondestructive test used to check the quality of welds on closed containers such a pressure vessels and tanks. The test usually consists of filling the vessel with water and applying a pressure greater than the working pressure of the vessel. Sometimes, large tanks are filled with water not under pressure to detect possible leakage through defective welds. Another method is to test with oil and then steam out the vessel. Back see page of oil from behind the liner shows up visibly.

10–12. Magnetic Particle Test

This is a test or inspection method used on welds and parts of magnetic alloy steels. It is applicable only to ferro-magnetic materials in which the deposited weld is also ferro-magnetic. A strong magnetic field is set up in the piece being inspected by means of high amperage electric currents. A leakage field will be set up by any discontinuity that intercepts this field in the part. Local poles are produced by the leakage field and these poles attract and hold magnetic particles that are placed on the surface for this purpose. The particle pattern produced on the surface indicates the presence of a discontinuity or defect on or close to the surface of the part.

10–13. X-Ray Test

This is a radiographic-test method used to reveal the presence and nature of internal defects in a weld, such as cracks, slag, blowholes, and zones where proper fusion is lacking. In practice, and X-ray tube is placed on one side of the welded plate and an X-ray film, with a special sensitive emulsion, on the other side. When developed, the defects in the metal show up as dark spots and bands, which can be interpreted by an operator experienced in this inspection method. Porosity and defective root penetration as disclosed by X-ray inspection are shown in figure 10–8.

Note. **Instructions for handling X-ray apparatus to avoid harm to operating personnel will be found in the "American Standard Code for the Industrial use of X-rays."**

10–14. Gamma Ray Test

This test is a radiographic inspection method similar to the X-ray method described in paragraph 10–13 except that the gamma rays emanate from a capsule of radium sulfate instead of an X-ray tube. Because of the short wave lengths of gamma rays, the penetration of sections of considerable thickness is possible but the time required for exposure for any thickness of metal is much longer than that required for X-rays. X-ray testing is used for most radiographic inspections but gamma ray equipment has the advantage of being extremely portable.

10–15. Fluorescent Penetrant Test

Fluorescent penetrant inspection is a nondestructive test method by means of which cracks, pores, leaks, and other discontinuities can be located in solid materials. It is particularly useful for locating surface defects in nonmagnetic materials, such as aluminum, mag-

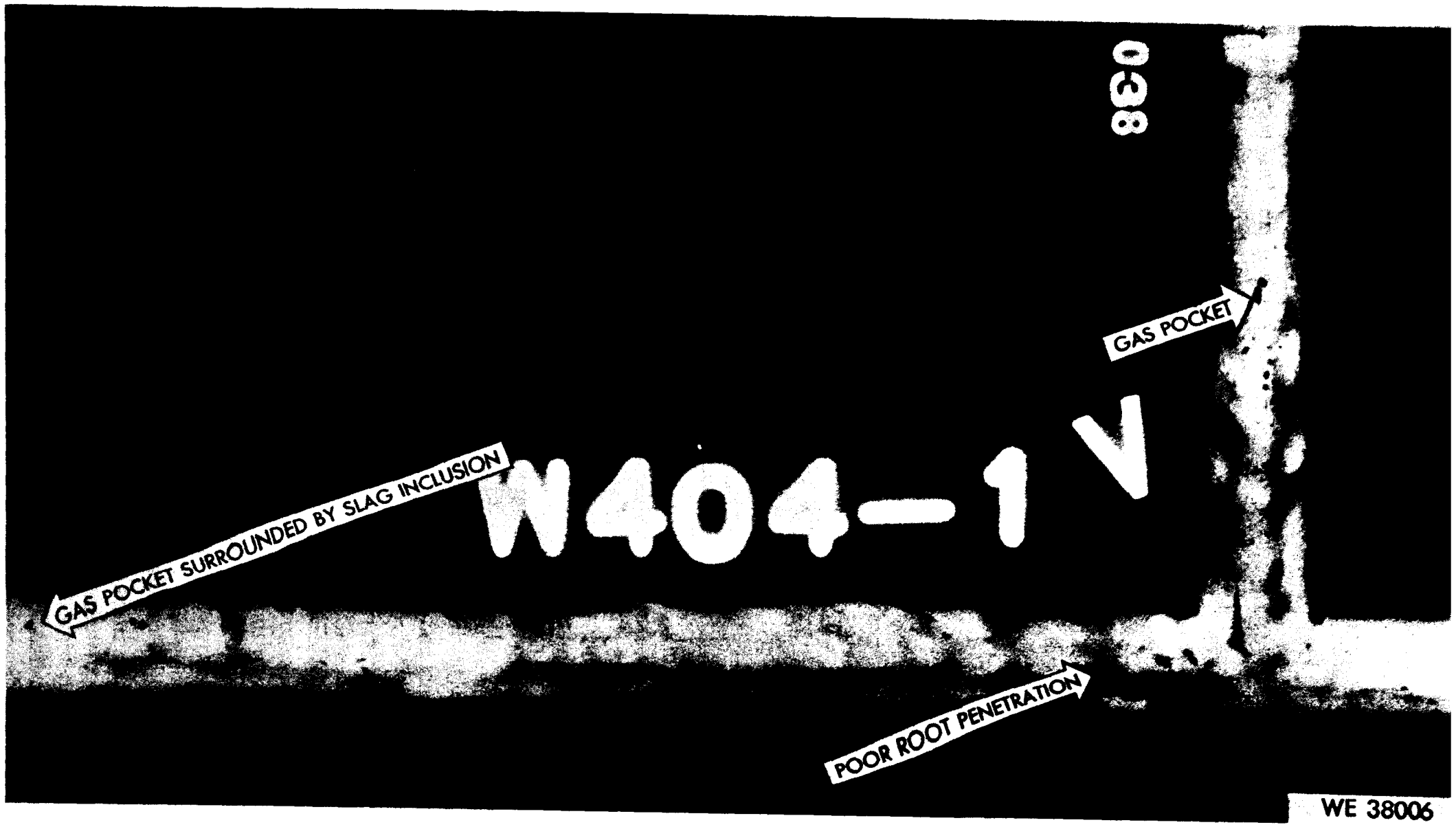

Figure 10–8. Internal weld defects disclosed by X-ray inspection.

nesium, and austenitic steel welds and for locating leaks in all types of welds. This method makes use of a water washable, highly fluorescent material that has exceptional penetration qualities. This material is applied to the clean dry surface of the metal to be inspected by brushing, spraying, or dipping. The excess material is removed by rinsing, wiping with clean water soaked cloths, or by sandblasting. A wet or dry type developer is then applied. Discontinuities in surface which have been properly cleaned, treated with the penetrant, rinsed, and treated with developer are shown by brilliant fluorescent indications under black light.

10–16. Hardness Tests

a. *General.* Hardness may be defined as the property of a substance to resist identation or localized displacement. The hardness test usually applied is a nondestructive test, used primarily in the laboratory and not to any great extent in the field. Hardness tests are used as a means of controlling the properties of materials used for a specific purpose after the desired hardness has been established for the particular application. A hardness test is used to determine the hardness of weld metal, and by careful testing of a welded joint, the hard areas can be isolated and the extent of the effect of the welding heat on the properties of the base metal determined.

b. *Hardness Testing Equipment.*

(1) *FILE TEST.* The simplest method for determining comparative hardness is the test. It is performed by running a file under manual pressure over the piece being tested. Information may thus be obtained as to whether the metal tested is harder or softer than the file or other materials that have been given the same treatment.

(2) *HARDNESS TESTING MACHINES.* There are several types of hardness testing machines. Each of them is singular in that its functional design best lends itself to the particular field of application for which the machine is intended; however, more than one type of machine can be used on a given metal, and the hardness values obtained can be satisfactorily correlated. Two types of machines are used most commonly in laboratory tests for metal hardness. These machines are described below.

(A) *BRINELL TESTING MACHINE.* In the Brinell tests, the specimen is mounted on the anvil of the machine and a load of 3,000 kilograms (6,620 lb.) is applied against a hardened steel ball which is in contact with the surface of the specimen being tested. The steel ball is 10 millimeters (0.4 in.) in diameter. The load is allowed to remain ½ minute and is then released, and the depth of the depression made by the ball on the specimen is measured. The resultant Brinell hardness number is obtained by the following formula:

$$\text{B.H.N.} = \frac{P}{\frac{\Pi}{2}\left(D - \sqrt{D^2 - d^2}\right)}$$

B.H.N.: Brinell hardness number
P: Applied load in kilograms
D: Diameter of steel ball millimeters
d: Diameter of impression in millimeters

It should be noted that, in order to facilitate the determination of Brinell hardness, the diameter of the depression rather than the depth is actually measured. Charts of Brinell hardness numbers have been prepared for a range of impression diameters for given impression depths. These charts are commonly used to determine Brinell numbers.

(B) *ROCKWELL HARDNESS TESTER.* The principle of the Rockwell tester is essentially the same as the Brinell tester. It differs from the Brinell tester in that a lesser load is impressed on a smaller ball or cone shaped diamond. The depth of the identation is measured and indicated on a dial attached to the machine. The hardness is expressed in arbitrary figures called "Rockwell numbers." These are prefixed with a letter notation such as "B" or "C" to indicate the size of the ball used, the impressed load, and the scale used in the test.

CHAPTER 11

PRINT READING AND WELDING SYMBOLS

Section I. PRINT READING

11–1. General

a. Drawing or sketching is a universal language used to convey all the necessary information to the individual who will fabricate or assemble an object. Prints are also used to illustrate how various equipment is operated, maintained, repaired, or lubricated. The original drawings for prints are made by drawing directly on, or tracing a drawing on a translucent tracing paper or cloth, using waterproof (india) ink or a special pencil. The original drawing is referred to as a tracing or master copy.

b. Various methods of reproduction have been developed which will produce prints of different colors from the master copy.

(1) One of the first processes devised to reproduce a tracing produced white lines on a blue background, hence the term blueprints.

(2) A patented paper identified as "BW" paper produces prints with black lines on a white background.

(3) The ammonia process or "Ozalids" produces prints with either black, blue, or maroon lines on a white background.

(4) Vandyke paper produces a white line on a dark brown background.

(5) Other reproduction methods are the mimeograph machine, ditto machine, and photostatic process.

11–2. Parts of a Drawing

a. *Title Block.* The title block contains the drawing number and all the information required to identify the part or assembly represented. In approved military prints the name and address of the Government Agency or organization preparing the drawing, the scale, drafting record, authentication, and the date will be included.

b. *Revision Block.* Each drawing has a revision block which is usually located in the upper right corner. All changes to the drawing are noted in this block. They are dated and identified by a number or a letter. If a revision block is not used a revised drawing may be shown by the addition of a letter to the original number.

c. *Drawing Number.* All drawings are identified by a drawing number. If a print has more than one sheet, and each sheet has the same number, this information is included in the number block indicating the sheet number and the number of sheets in the series.

d. *Reference Numbers and Dash Numbers.* Reference numbers that appear in the title block refer to other print numbers. When more than one detail is shown on a drawing, dash and numbers are frequently used. If two parts are to be shown in one detail drawing both prints would have the same drawing number, plus a dash and an individual number such as 7873102–1 and 7873102–2.

e. *Scale.* The scale of the print is indicated in one of the spaces within the title block. It indicates the size of the drawing as compared with the actual size of the part. *Never measure a drawing—use dimensions.* The print may have been reduced in size from the original drawing.

f. *Bill of Material.* A special block or box on the drawing may contain a list of necessary stock to make an assembly. It also indicates the type of stock, size, and the specific amount required.

11–3. Construction Lines. (fig. 11–1)

a. *Full Lines.* Full lines represent the visible edges on outlines of an object.

b. *Hidden Outlines.* Hidden outlines are made of short dashes which represent hidden edges of an object.

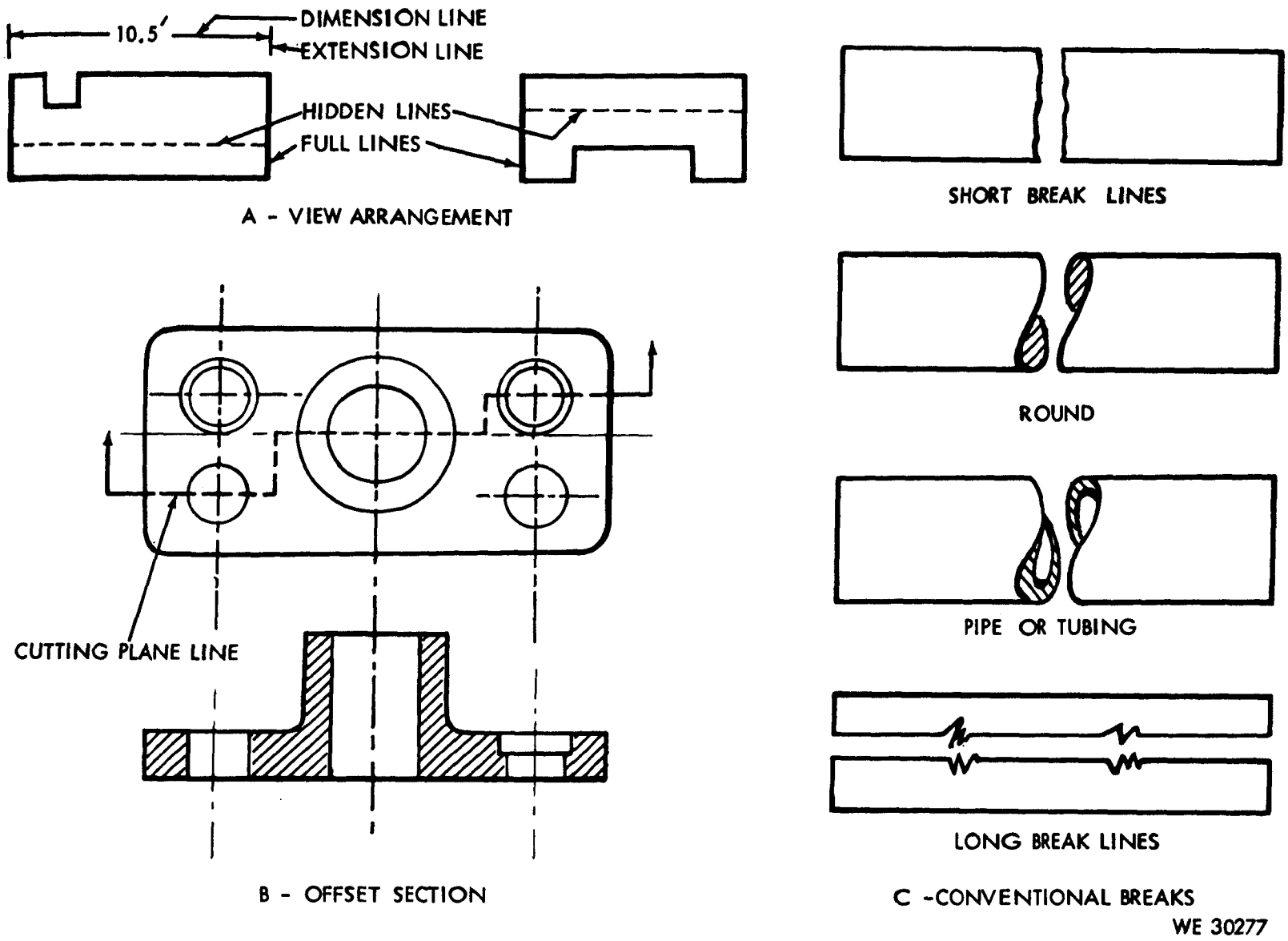

Figure 11–1. Construction lines.

c. *Center Lines.* Center lines are made with alternate short and long dashes. A line through the center of an object is called a center line.

d. *Cutting Plane Lines.* Cutting plane lines are solid lines, generally of the same width as the visible outline through the area being cut. Short wing lines at each end of the cutting line project at 90 deg to that line and end in arrowheads which point in the direction of viewing. Capital letters or numerals are placed just beyond the points of the arrows to designate the section.

e. *Dimension Lines.* Dimension lines are fine full lines ending in arrowheads used to indicate the measured distance between two points.

f. *Extension Lines.* Extension lines are fine lines from the outside edges or intermediate points of a drawn object. They indicate the limits of dimension lines.

g. *Break Lines.* Break lines are used to show a break in a drawing. The lines are used when it is desired to increase the scale of a drawing of uniform cross section while showing the true size by dimension lines. These are two kinds of break lines: short break and long break. Short break lines are usually heavy, wavy, semiparallel lines cutting off the object outline across a uniform section. Long break lines are long dash parallel lines, each long dash in the line being connected to the next by a "Z" or sharp wave line.

Section II. WELD AND WELDING SYMBOLS

11–4. General

Welding symbols provide the means for placing complete and concise welding information on drawings. The reference line of the welding symbol (fig. 11–2) is used to designate the welding process to be used, its location, dimensions, extent, contour, other supplementary information, and when necessary a tail (fig. 11–2) is attached to the reference line and provides specific notations. When such notations are not required the tail is omitted.

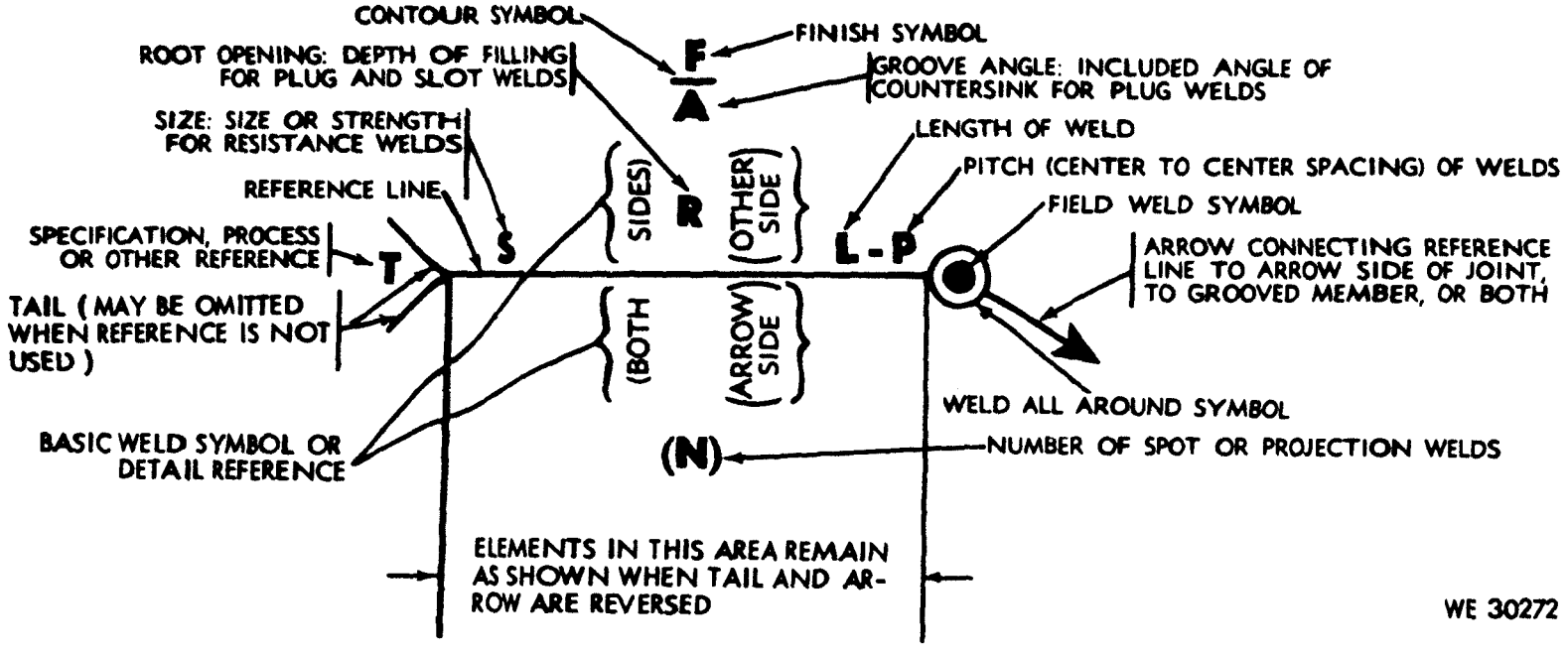
CONTOUR SYMBOL
ROOT OPENING: DEPTH OF FILLING FOR PLUG AND SLOT WELDS
SIZE: SIZE OR STRENGTH FOR RESISTANCE WELDS
REFERENCE LINE
SPECIFICATION, PROCESS OR OTHER REFERENCE
TAIL (MAY BE OMITTED WHEN REFERENCE IS NOT USED)
BASIC WELD SYMBOL OR DETAIL REFERENCE
F
A
FINISH SYMBOL
GROOVE ANGLE: INCLUDED ANGLE OF COUNTERSINK FOR PLUG WELDS
S
T
R
(OTHER SIDE)
(SIDES)
(BOTH)
(ARROW SIDE)
L-P
LENGTH OF WELD
PITCH (CENTER TO CENTER SPACING) OF WELDS
FIELD WELD SYMBOL
ARROW CONNECTING REFERENCE LINE TO ARROW SIDE OF JOINT, TO GROOVED MEMBER, OR BOTH
WELD ALL AROUND SYMBOL
(N)
NUMBER OF SPOT OR PROJECTION WELDS
ELEMENTS IN THIS AREA REMAIN AS SHOWN WHEN TAIL AND ARROW ARE REVERSED
WE 30272

Figure 11–2. Standard locations of elements on a welding symbol.

11–5. Elements of a Welding Symbol

A distinction is made between the term *weld symbol* and *welding symbol.* The *weld symbol* is the ideograph (A, and B, fig. 11–3) that is used to indicate the desired type of weld. The assembled *welding symbol* consists of the following eight elements or any of these elements as are necessary: reference line; arrow; basic weld symbols; dimensions and other data; supplementary symbols; finish symbols; tail; and the specification, process, or other reference. The location of the elements of a welding symbol with respect to each other is shown in figure 11–2.

11–6. Basic Weld Symbols

Weld symbols are used to indicate the following: welding processes used in metal joining operations, whether the weld is localized or "all around"; shop or field welds; and the contour of welds. These basic weld symbols are summarized in a through c below and illustrated in figure 11–4.

a. *Arc and Gas Weld Symbols.* These symbols shall be as shown in A, figure 11–3.

b. *Resistance Weld Symbols.* The symbols shall be as shown in B, figure 11–3.

c. *Brazing, Forge, Thermit, Induction, and Flow Weldments.* These weldments shall be indicated by using a process or specification reference in the tail of the welding symbols as shown in A, fig. 11–4. When the use of a definite process is required (B, fig. 11–4) the process may be indicated by one or more of the letter designations as shown in Tables 24 and 25. When no specification, process or other reference is used with a welding symbol, the tail may be omitted as shown in D, figure 11–4.

d. *Supplementary Symbols.* The symbols are used in many welding processes and shall be used as shown in C, fig. 11–3.

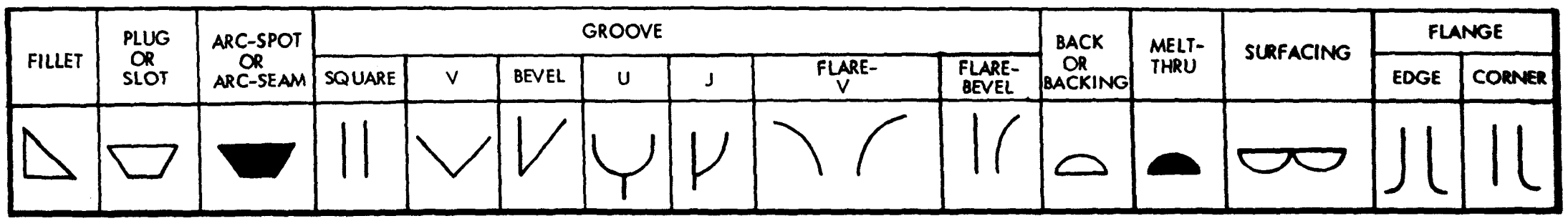

A — BASIC ARC AND GAS WELD SYMBOLS

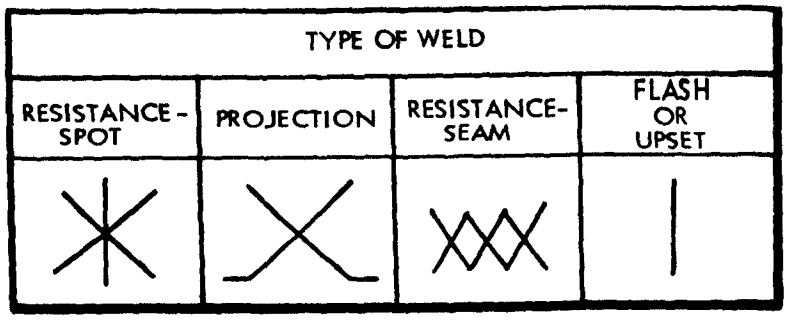

B – BASIC RESISTANCE WELD SYMBOLS

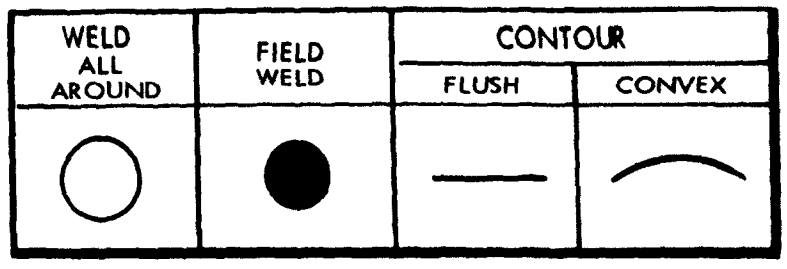

C — SUPPLEMENTARY SYMBOLS

WE 30271

Figure 11–3. Basic weld symbols.

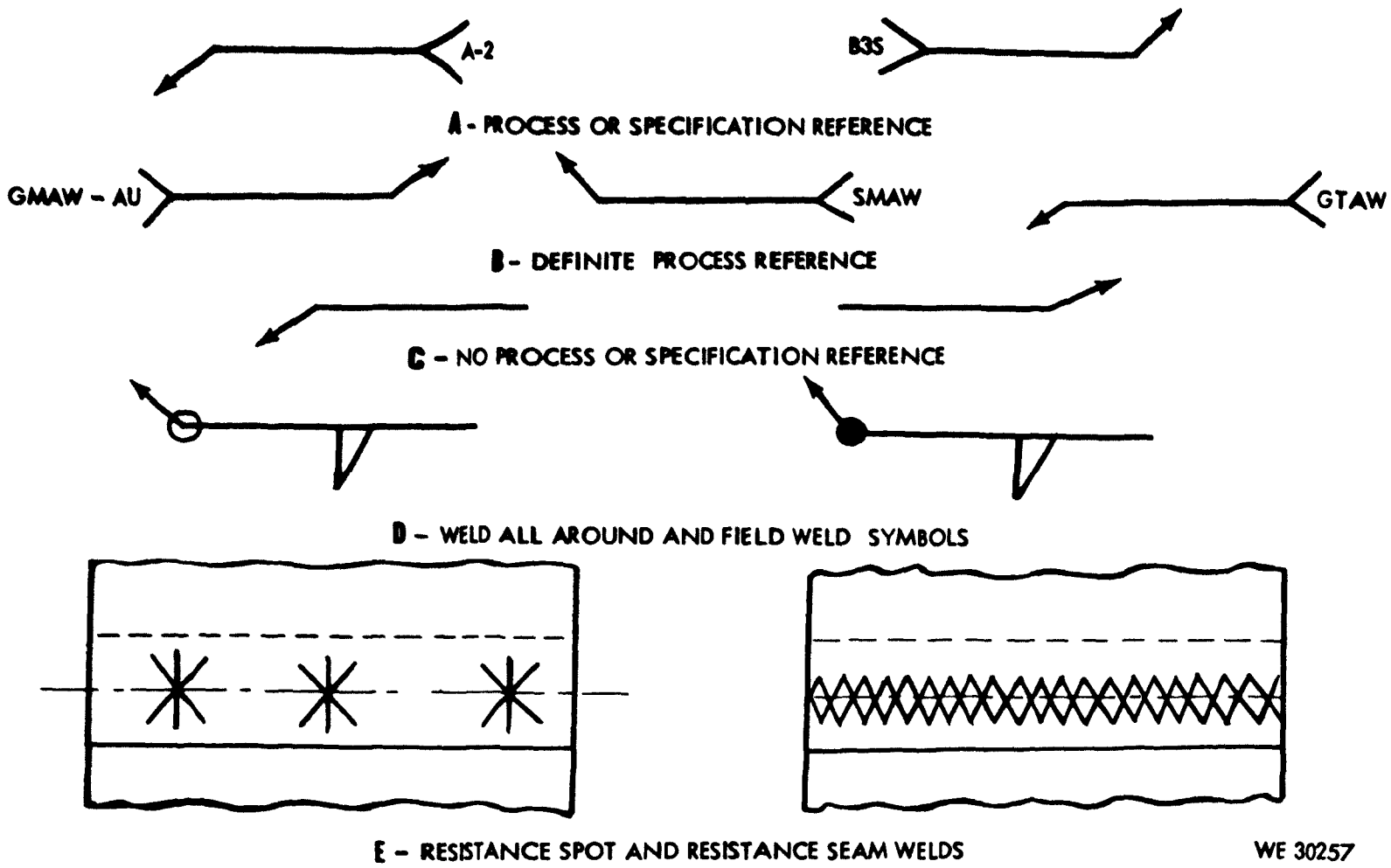
A-2
B3S
A - PROCESS OR SPECIFICATION REFERENCE
GMAW - AU
SMAW
GTAW
B - DEFINITE PROCESS REFERENCE
C - NO PROCESS OR SPECIFICATION REFERENCE
D - WELD ALL AROUND AND FIELD WELD SYMBOLS
E - RESISTANCE SPOT AND RESISTANCE SEAM WELDS
WE 30257

Figure 11–4. Process or specification reference.

*Table 24. Designation of Welding Processes by Letters**

Welding Process		Letter Designation
Brazing	Torch Brazing	TB
	Twin Carbon-Arc Brazing	TCAB
	Furnace Brazing	FB
	Induction Brazing	IB
	Resistance Brazing	RB
	Dip Brazing	DB
	Block Brazing	BB
	Flow Brazing	FLB
Flow Welding	Flow Welding	FLOW
Resistance Welding	Flash Welding	FW
	Upset Welding	UW
	Percussion Welding	PEW
Induction Welding	Induction Welding	IW
Arc Welding	Bare Metal Arc Welding	BMAW
	Stud Welding	SW
	Gas-Shielded Stud Welding	GSSW
	Submerged Arc Welding	SAW
	Gas Tungsten-Arc Welding	GTAW
	Gas Metal-Arc Welding	GMAW
	Atomic Hydrogen Welding	AHW
	Shielded Metal-Arc Welding	SMAW
	Twin Carbon-Arc Welding	TCAW
	Carbon-Arc Welding	CAW
	Gas Carbon-Arc Welding	GCAW
	Shielded Carbon-Arc Welding	SCAW
Thermit Welding	Nonpressure Thermit Welding	NTW
	Pressure Thermit Welding	PTW
Gas Welding	Pressure Gas Welding	PGW
	Oxy-Hydrogen Welding	OHW
	Oxy-Acetylene Welding	OAH
	Air-Acetylene Welding	AAW
Forge Welding	Roll Welding	RW
	Die Welding	DW
	Hammer Welding	HW

***Note.* Letter designation have not been assigned to arc spot, resistance spot, arc seam, resistance seam, and projecting welding since the weld symbols used are adequate.**

*The following suffixes may be used to indicate the method of applying the above processes.

Automatic Welding	—AU
Machine Welding	—ME
Manual Welding	—MA
Semi-Automatic Welding	—SA

*Table 25. Designation of Cutting Processes by Letters**

Cutting Process	Letter Designation
Arc Cutting	AC
Air Carbon–Arc Cutting	AAC
Carbon–Arc Cutting	CAC
Metal–Arc Cutting	MAC
Oxygen Cutting	OC
Chemical Flux Cutting	FOC

Cutting Process	Letter Designation
Metal Powder Cutting	POC
Oxygen-Arc Cutting	AOC

* The following suffixes may be used to indicate the methods of applying the above processes:

Automatic Cutting	—AU
Machine Cutting	—ME
Manual Cutting	—MA
Semi-Automatic Cutting	—SA

11–7. Location Significance of Arrow

a. In fillet, groove, flange, and flash or upset welding symbols, the arrow shall connect the welding symbol reference line to one side of the joint, and this side shall be considered the *arrow side* of the joint (A, fig. 11–5). The side opposite the arrow side of the joint shall be considered the *other side* of the joint (B, fig. 11–5).

b. In plug, slot, arc spot, arc seam, resistance spot, resistance seam and projection welding symbols the arrow shall connect the welding symbol reference line to the outer surface of one of the members of the joint at the centerline of the desired weld. The member to which the arrow points shall be considered the *arrow side* member. The other member of the joint shall be considered the *other side* member (A and B, fig. 11–6).

c. When a joint is depicted by a single line on the drawing and the arrow of a welding symbol is directed to this line, the *arrow side* of the joint shall be considered as the near side of the joint in accordance with the usual conventions of drafting (C and D, fig. 11–5).

d. When a joint is depicted as an area parallel to the plane of projection in a drawing and the arrow of a welding symbol is directed to that area, the *arrow side* member of the joint shall be considered as the near member of the joint in accordance with the usual conventions of drafting (A and B, fig. 11–6).

11–8. Location of the Weld With Respect to Joint

a. Welds on the arrow side of the joint shall be shown by placing the weld symbol on the side of the reference line toward the reader (A, fig. 11–7).

b. Welds on the other side of the joint shall be shown by placing the weld symbol on the

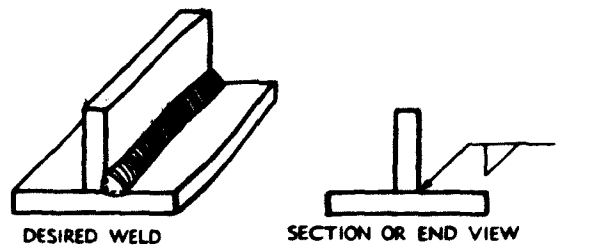

Figure 11–5. Fillet welding symbol denoting location of the weld.

side of the reference line away from the reader (B, fig. 11–7).

c. Welds on both sides of the joint shall be shown by placing weld symbols on both sides of the reference line, toward and away from the reader (C, fig. 11–7).

d. Resistance spot, resistance seam, flash and upset weld symbols have no arrow side or other side significance in themselves, although supplementary symbols used in conjunction with these symbols may have such significance. For example: the flush contour symbol (C, fig. 11–3) is used in conjunction with the spot and seam symbols (D, fig. 11–7) to show that the exposed surface of one mem-

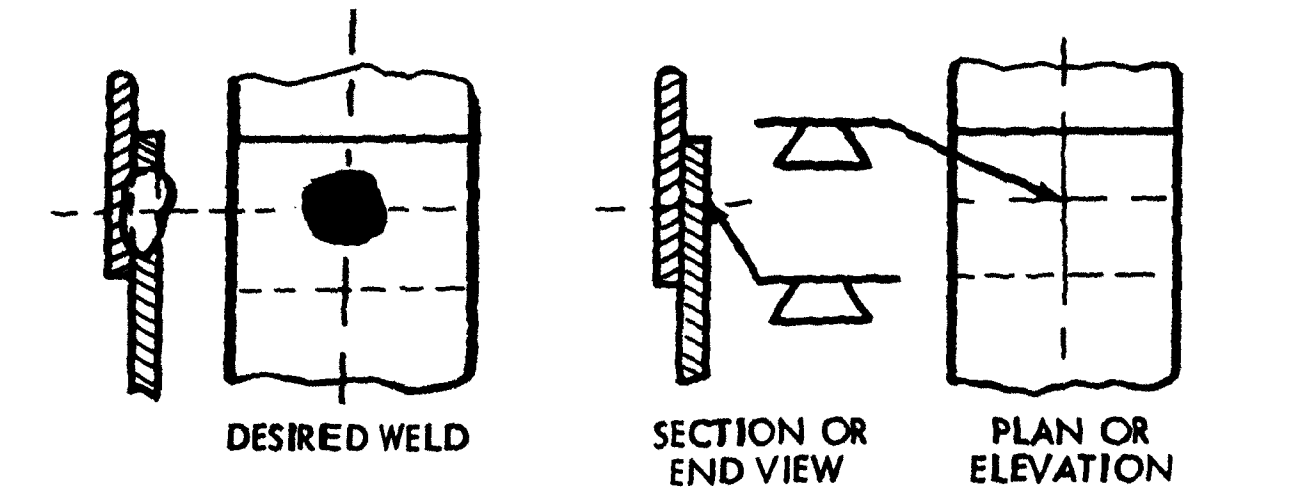

A —PLUG WELD ON ARROW-SIDE OF JOINT

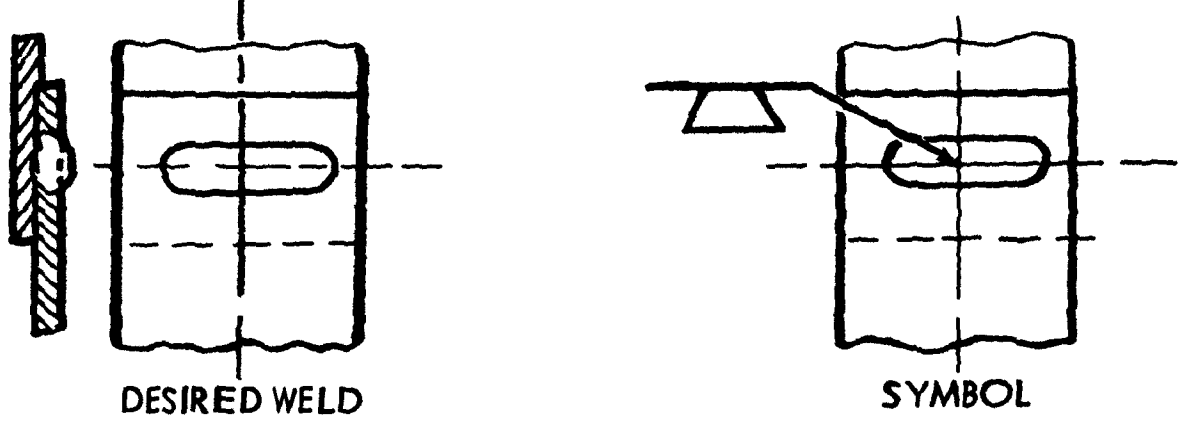

B —SLOT WELD ON ARROW-SIDE OF JOINT

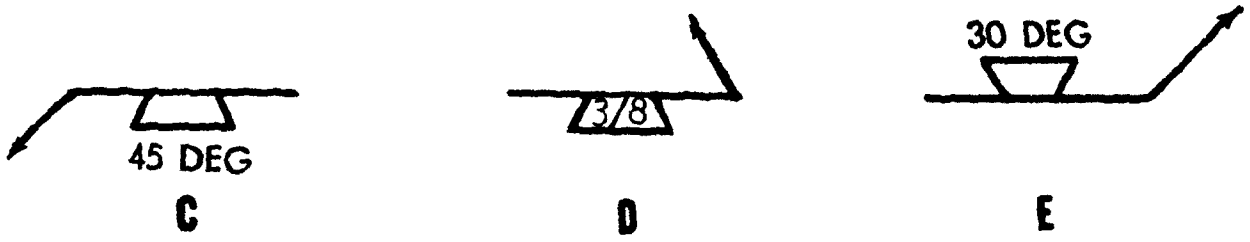

DIMENSIONS OF PLUG OR SLOT WELDS

F— DETAILS OF SLOT-WELDS

G— SURFACE CONTOUR OF PLUG AND SLOT WELDS

NOTE: ALL DIMENSIONS SHOWN ARE IN INCHES.

WE 30266

Figure 11-6. Plug-and slot-welding symbols indicating location and dimensions of the weld.

A —WELDS ON THE ARROW SIDE OF JOINT

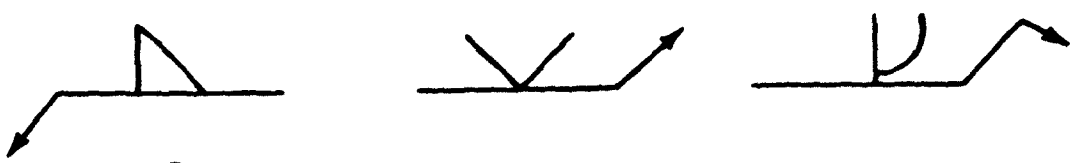

B — WELDS ON THE OTHER SIDE OF JOINT

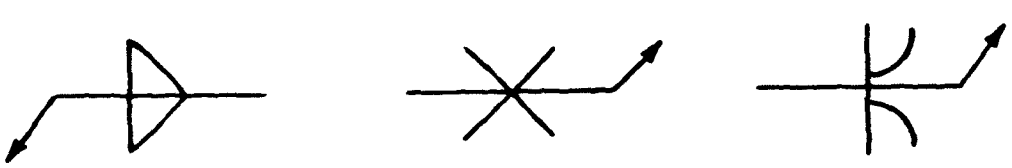

C —WELDS ON BOTH SIDES OF JOINT

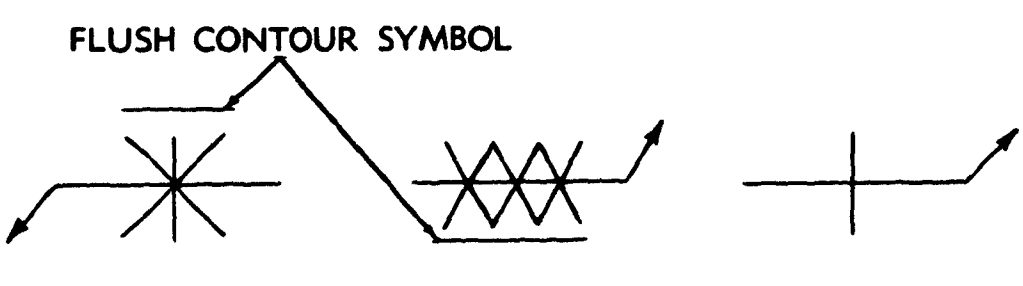

D —SPOT, SEAM, AND FLASH OR UPSET WELD SYMBOLS

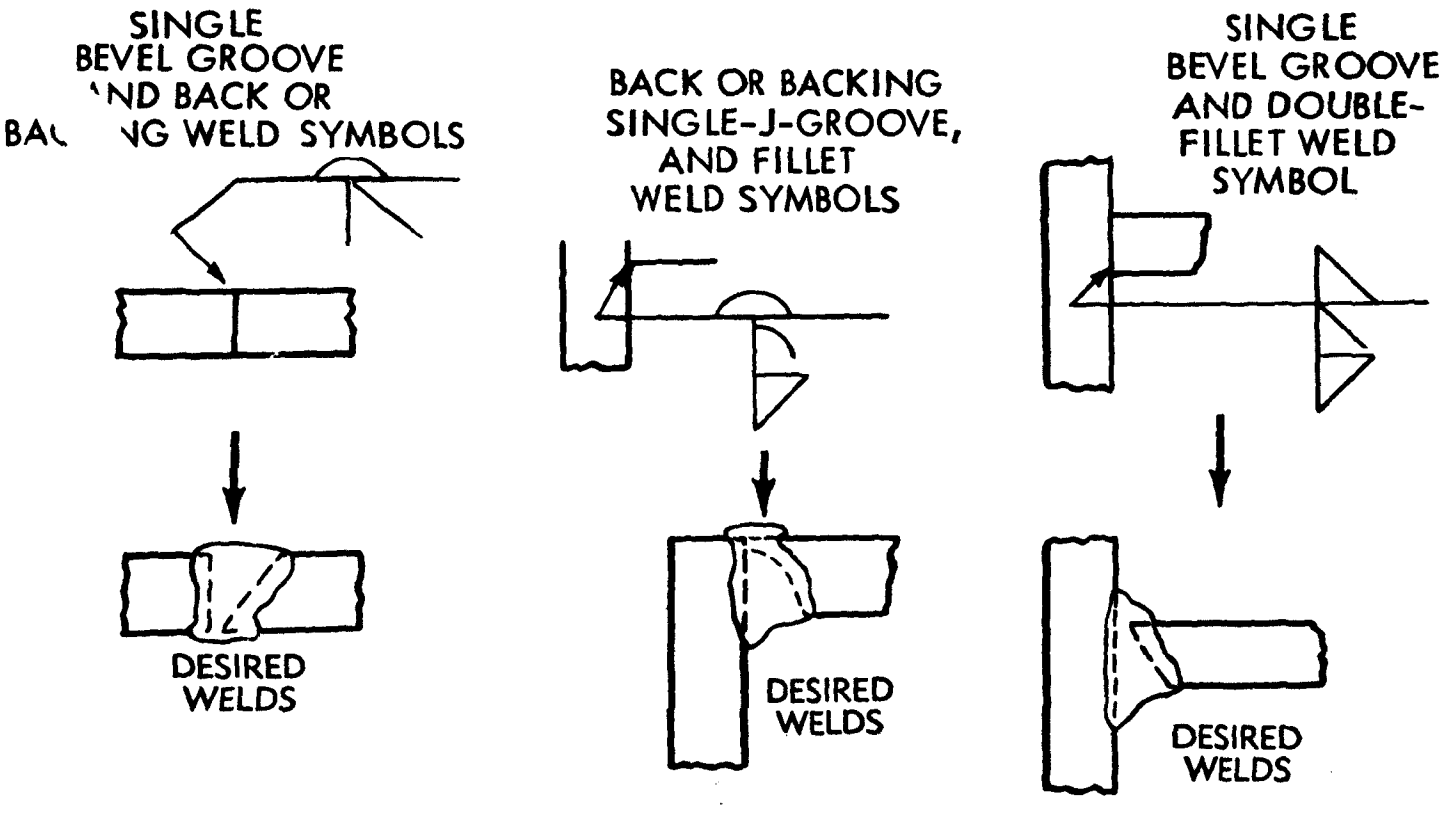

E —COMBINATIONS OF WELD SYMBOLS

WE 30265

Figure 11–7. Welding symbols indicating type and location of welds.

ber of the joint is to be flush. Resistance spot, resistance seam, flash and upset weld symbols shall be centered on the reference line (D, fig. 11–7).

11–9. References and General Notes

a. Symbols may be used without specification, process or other references when:

(1) A note such as the following appears on the drawing: "Unless otherwise designated, all welds are to be made in accordance with Specification No. ."

(2) The welding procedure to be used is prescribed elsewhere.

b. General notes such as the following may be placed on a drawing to provide detailed information pertaining to the predominating welds, and this information need not be repeated on the symbols:

(1) "Unless other wise indicated, all fillet welds are 5/16-inch size."

(2) "Unless otherwise indicated, root openings for all groove welds are 3/16-inch."

11–10. Weld-All-Around and Field Weld Symbols

a. Welds extending completely around a joint shall be indicated by means of the weld-all-around symbol (D, fig. 11–4).

b. Field welds are welds not made in a shop or at the place of initial construction and shall be indicated by means of the field weld symbol (D, fig. 11–4).

11–11. Extend of Welding Denoted by Symbols

a. Symbols apply between abrupt changes in the direction of the welding or to the extend of hatching or dimension lines, except when the weld-all-around symbol (C, fig. 11–3) is used.

b. The welding on hidden joints may be covered when the welding is the same as that of the visible joint. The drawing shall indicate the presence of hidden members. If the welding on the hidden joint is different from that of the visible joint, specific information for the welding of both shall be given.

11–12. Location of Weld Symbols

a. Weld symbols, except resistance spot and resistance seam, shall be shown only on the welding symbol reference line and *not* on the lines of the drawing.

b. Resistance spot and resistance seam weld symbols may be placed directly at the locations of the desired welds (E, fig. 11–4).

11–13. Use of Inch, Degree and Pound Marks

Inch, degree, and pound marks may or may not be used on welding symbols, as desired, except that inch marks shall be used for indicating the diameter of arc spot, resistance spot and circular projection welds and the width of arc seam and resistance seam welds, when such welds are specified by decimal dimension.

11–14. Construction of Symbols

a. Fillet, bevel and J groove, flare bevel groove, and corner flange symbols shall be shown with the perpendicular leg *always* to the left (A, fig. 11–8).

b. In a bevel or J groove weld symbol, the arrow shall point with a definite break toward the member which is to be chamfered (B, fig. 11–8). In cases where the member to be chamfered is obvious, the break in the arrow may be omitted.

c. Information on welding symbols shall be placed to read from left to right along the reference line in accordance with the usual conventions of drafting, (C, fig. 11–8).

d. For joints having more than one weld, a symbol shall be shown for each weld (E, fig. 11–7).

e. When the basic weld symbols are inadequate to indicate the desired weld, the weld shall be shown by a cross section, detail or other data, with a reference on the welding symbol, observing the usual location significance (D, fig. 11–8).

11–15. Fillet Welds

a. Dimensions of fillet welds shall be shown on the same side of the reference line as the weld symbol (A, fig. 11–9).

b. When no general note governing the dimensions of fillet welds appears on the drawing, the dimensions of fillet welds on both sides of the joint shall be as follows:

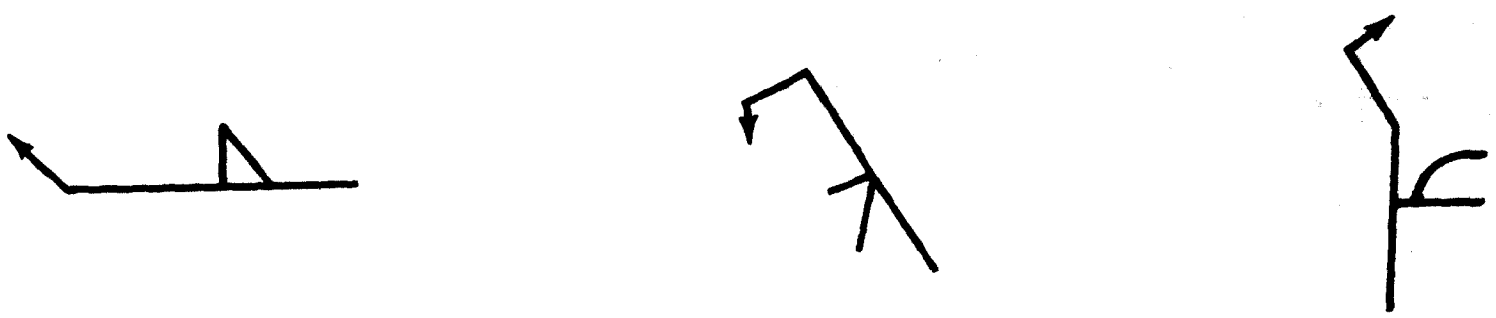

A— PERPENDICULAR LEG ALWAYS TO THE LEFT

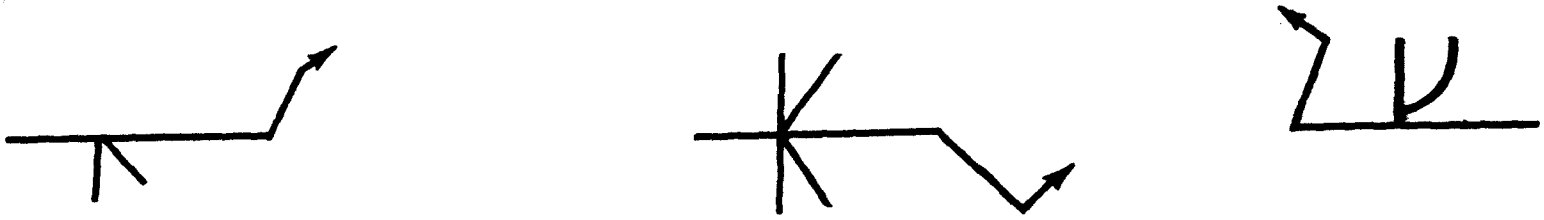

B—ARROW BREAK TOWARD CHAMFERED MEMBER

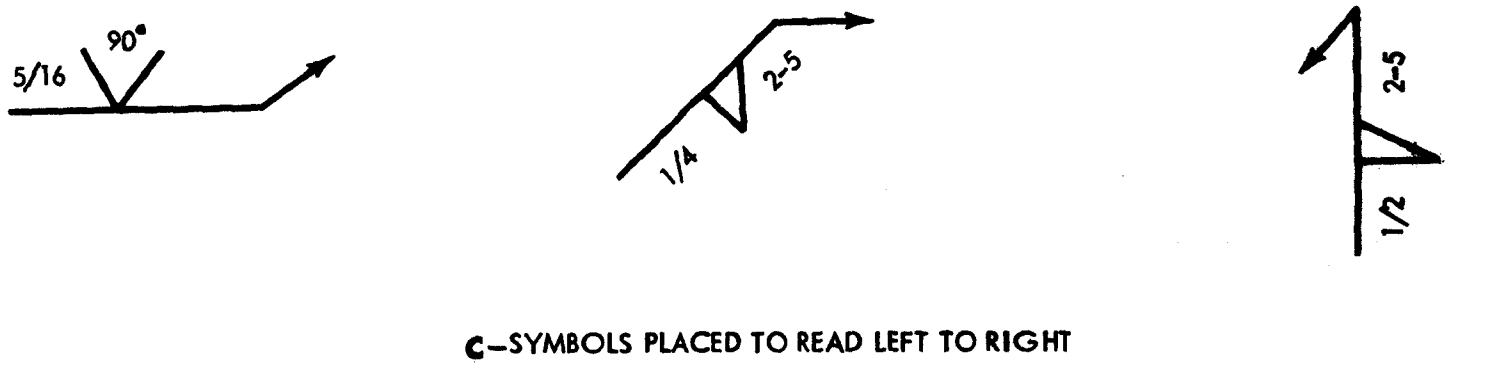

C—SYMBOLS PLACED TO READ LEFT TO RIGHT

D— SPECIAL TYPES OF WELDS

WE 30258

Figure 11–8. Construction of symbols.

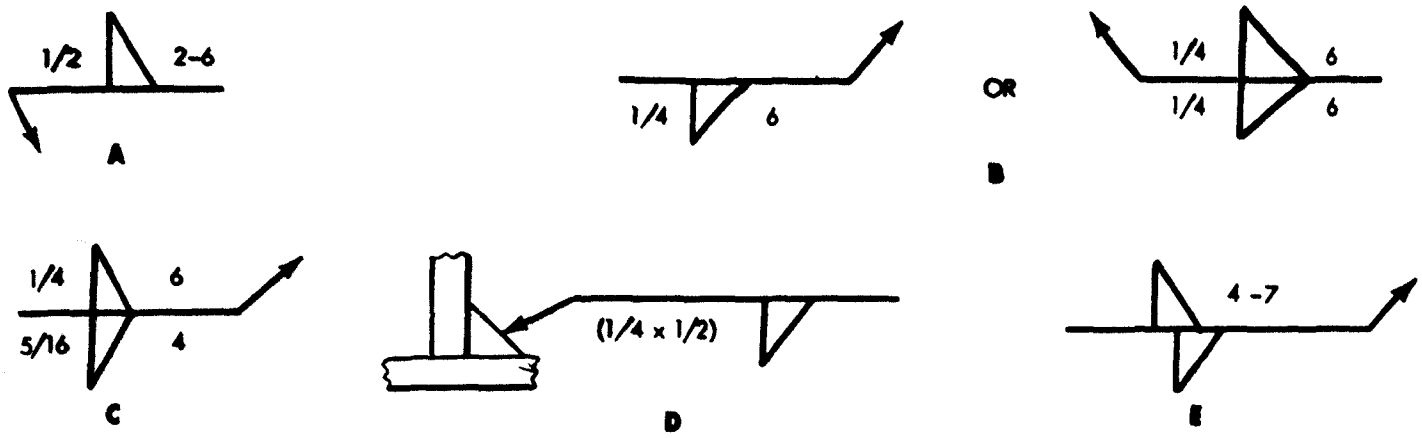

DIMENSIONS OF FILLET WELDS

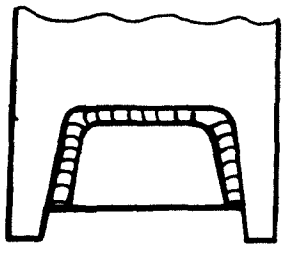

FILLET WELD ON 3 SIDES
NO WELD AT CORNERS

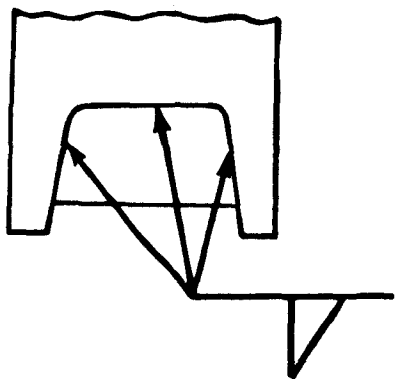

F –EXTENT OF FILLET WELDS

DESIRED WELDS

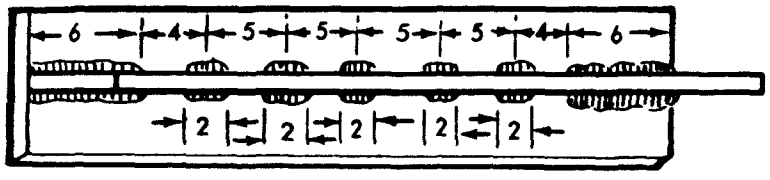

SYMBOLS

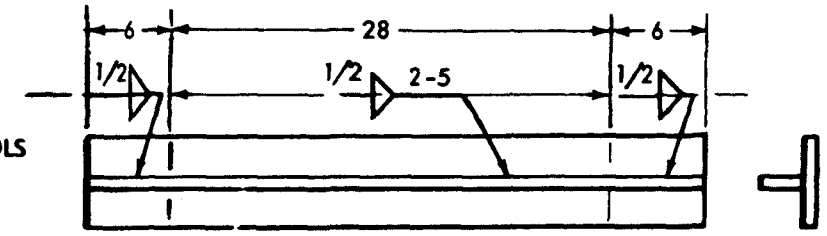

G —COMBINED INTERMITTENT AND CONTINOUS WELDS

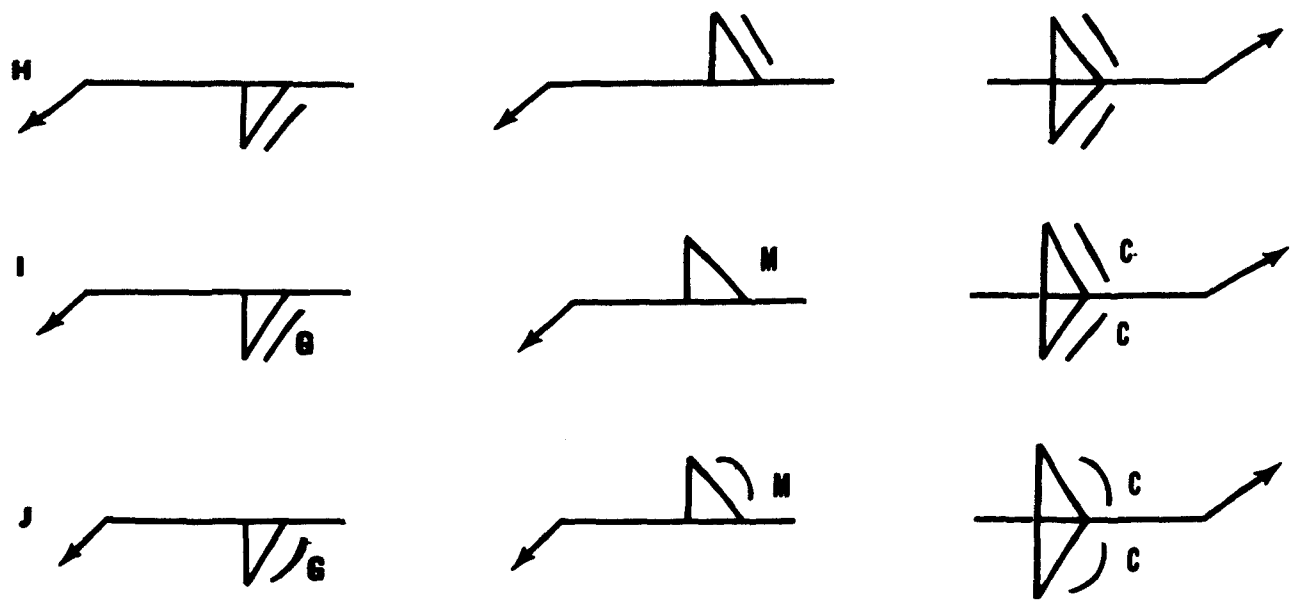

SURFACE CONTOUR OF FILLET WELDS

WE 30259

Figure 11–9. Fillet welds.

(1) When both welds have the same dimensions, one or both may be dimensioned (B, fig. 11–9).

(2) When the welds differ in dimensions, both shall be dimensioned (C, fig. 11–9).

c. When a general note governs the dimensions then:

(1) Neither weld need be dimensioned.

(2) When the dimensions of one or both welds differ from the dimensions giveni n the general note, both welds shall be dimensioned (C, fig. 11–9).

11–16. Size of Fillet Welds

a. The size of a fillet weld shall be shown to the left of the weld (A, fig. 11–9).

b. The size of a fillet weld with unequal legs shall be shown in parentheses to the left of the weld symbol. Weld orientation is not shown by the symbol and shall be shown on the drawing when necessary (D, fig. 11–9).

11–17. Length of Fillet Welds

a. The length of a fillet weld, when indicated on the welding symbol, shall be shown to the right of the weld symbol (A and B, fig. 11–9).

b. When fillet welding extends for the full distance between abrupt changes in the direction of the welding (par. 11–10) no length dimension need be shown on the welding symbol.

c. Specific lengths of fillet welding may be indicated by symbols in conjunction with dimension lines.

11–18. Extent of Fillet Welding

a. When it is desired to show the extent of fillet welding graphically, one type of hatching with or without definite lines shall be used.

b. Fillet welding extending beyond abrupt changes in the direction of the welding shall be indicated by means of additional arrows pointing to each section of the joint to be welded, except when the weld all around symbol is used, (F, fig. 11–9).

11–19. Dimensioning of Intermittent Fillet Welding

a. The pitch (center-to-center spacing) of intermittent fillet welding shall be shown as the distance between centers of increments on *one* side of the joint.

b. The pitch of intermittent fillet welding shall be shown to the right of the length dimension (A, fig. 11–9).

c. Chain intermittent fillet welding shall be as shown in (A, fig. 11–9).

d. Staggered intermittent fillet welding shall be as shown on (E, fig. 11–9).

11–20. Termination of Intermittent Fillet Welding

a. When intermittent fillet welding is used by itself, the symbol indicates that increments shall be located at the ends of the dimensioned length.

b. When intermittent fillet welding used between continuous fillet welding the symbol indicates that spaces equal to the pitch minus the length of one increment shall be left at the ends of the dimensioned length. Separate symbols shall be used for intermittent and continuous fillet welding when the two are used in combination (G, fig. 11–9).

11–21. Surface Contour of Fillet Welds

a. Fillet welds that are to be welded approximately flat faced without recourse to any method of finishing shall be shown by adding the flush-contour symbol to the weld symbol, observing the usual location significance (H, fig. 11–9).

b. Fillet welds that are to be made flat faced by mechanical means shall be shown by adding both the flush contour symbol and the user's standard finish symbol, observing the usual location significance (I, fig. 11–9).

c. Fillet welds that are to be mechanically finished to a convex contour shall be shown by adding both the convex contour symbol and the user's standard finish symbol to the weld symbol, observing the usual location significance (J, fig. 11–9).

Note. **Finish symbols used here indicate the method of finishing ("C" = chipping; "G" = grinding; "H" = hammering; "M' = machining) and not the degree of finish.**

11–22. Plug and Slot Welding Symbols

a. *General.* Neither the plug weld symbol

nor the slot weld symbol is to be used to designate the fillet welds in holes.

b. *Arrow and Other Side Indication of Plug and Slot Welds.* Holes or slots in the arrow side member of a joint for plug slot welding shall be indicated by placing the weld symbol on the side of the reference line toward the reader, (A and F, fig. 11–6). Holes or slots in the other side member of a joint are indicated by placing the weld symbol on the side of the reference line away from the reader.

c. *Plug Weld Dimensions.* Dimensions of plug welds shall be shown on the same side of the reference line as the weld symbol. The size of a weld shall be shown to the left of the weld symbol. Included angle of countersink of plug welds shall be the user's standard unless otherwise indicated. Included angle of countersink, when not the user's standard, shall be shown by the weld symbol. The pitch (Center-to-Center spacing) of plug welds shall be shown to the right of the weld symbol.

d. *Depth of Filling of Plug and Slot Welds.* Depth of filling of plug and slot welds shall be complete unless otherwise indicated. When the depth is less than complete, the depth of filling, shall be shown in inches inside the weld symbol (D, fig. 11–6).

e. *Details of Slot Welds.* Length, width, spacing, included angle of countersink, orientation and location of slot welds cannot be shown on the welding symbols. These data shall be shown on the drawing or by a detail with a reference to it on the welding symbol, observing the usual location significance (F, fig. 11–9).

f. *Surface contour of plug and slot welds.* The surface contour shall be indicated in the same manner as that for fillet welds (par. 11–20) (G, fig. 11–6).

11–23. Arc Spot and Arc Seam Welds

a. *General.* Dimensions for arc spot and arc seam welds shall be shown on the same side of the reference line as the weld symbol.

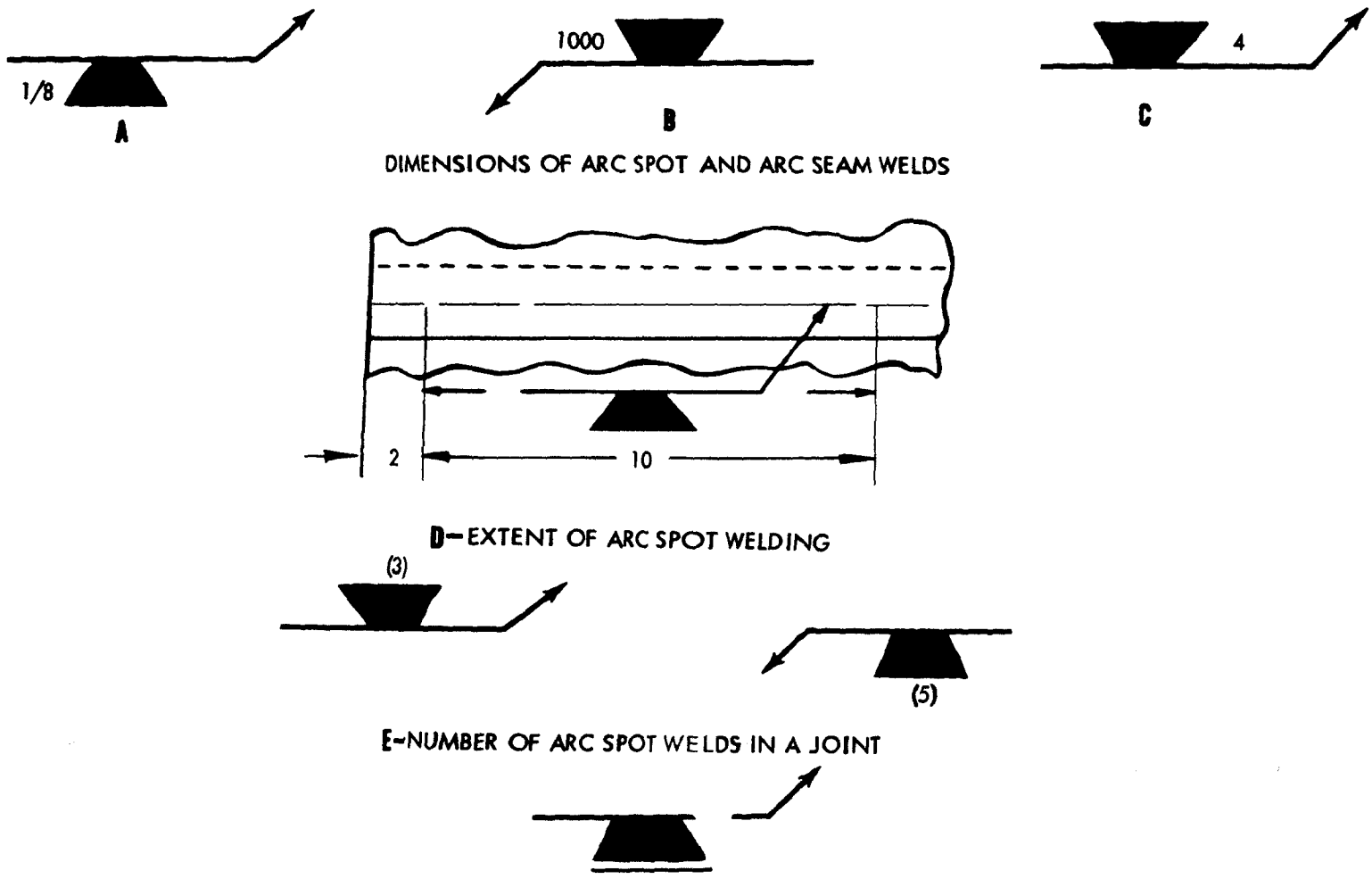

Figure 11–10. Arc spot and arc seam welds.

b. *Size of Arc Spot and Arc Seam Welds.* These welds may be dimensioned by either size or strength.

(1) The size of arc spot welds shall be designated as the diameter of the weld. Arc seam weld size shall be designated as the width of the weld. Dimensions will be expressed in fractions or decimally in hundredths of an inch, and shall be shown with or without inch marks to the left of the weld symbol (A, fig. 11–10).

(2) The strength of arc spot welds shall be designated as the minimum acceptable shear strength in pounds per spot. In arc seam welds strength is designated in pounds per linear inch. Strength is shown to the left of the weld symbol (B, fig. 11–10).

c. *Spacing Arc Spot and Arc Seam Welds.*

(1) The pitch of arc spot welds and when indicated, the length of arc seam welds shall be shown to the right of the weld symbol (C, fig. 11–10).

(2) When arc seam welding extends for the full distance between abrupt changes in the direction of the welding no length dimension need be shown on the welding symbol.

d. *Extent and Number of Arc-Spot Welding.*

(1) When arc spot welding extends less than the distance between abrupt changes in the direction of the welding, or less than the full length of the point the extent shall be dimensioned (D, fig. 11–10).

(2) When a definite number of arc spot welds is desired in a certain joint the number shall be shown in parentheses either above or below the weld symbol (E, fig. 11–10).

e. *Details of Arc Seam Welds.* Spacing, extent, orientation, and location of arc seam welds cannot be shown on the welding symbols. This data shall be shown on the drawing.

f. *Flush Arc Spot and Arc Seam Welded Joints.* When the exposed surface of one member of an arc spot or arc seam welded joint is to be flush, that surface shall be indicated by adding the flush contour symbol in the same manner as that for fillet welds. (Par. 11–21a) (F, fig. 11–10).

11–24. Groove Welds

a. *General.* Dimensions of groove welds shall be shown on the same side of the reference line as the weld symbol.

(1) When no general note governing the dimensions of groove welds appear on the drawing, the dimensions of double groove welds shall be shown as follows:

(a) When both welds have the same dimensions one or both may be dimensioned (A, fig. 11–11).

(b) When the welds differ in dimensions both shall be dimensioned (B, fig. 11–11).

(2) When a general note governs the dimensions of groove welds the dimensions of double groove welds shall be indicated as follows:

(a) If both weld dimensions are goverened by a note neither symbol need be dimensioned.

(b) When the dimensions of one or both welds differ from the dimensions given in the general note both welds shall be dimensioned (B, fig. 11–11).

b. *Size of Groove Welds.* The size of groove welds shall be shown to the left of the weld symbol (B, fig. 11–11).

(1) The size of groove welds with no specified root penetration shall be shown as follows:

(a) The size of single groove and symmetrical double groove welds which extend completely through the member or members being joined need not be shown on the welding symbol (A and B, fig. 11–12).

(b) The size of groove welds which extend only partly through the member or members being joined shall be shown on the welding symbol (C and D, fig. 11–12).

(2) The size of groove welds with specified root penetration, except square groove welds, shall be indicated by showing both the depth of chamfering and the root penetration, separated by a plus mark and placed to the left of the weld symbol. The depth of chamfering and the root penetration shall read in that order from left to right along the reference line (E and F, fig. 11–12). The size of square groove welds shall be indicated by showing only the root penetration.

(3) The size of flare groove welds is considered as extending only to the tangent points as indicated by dimension lines (C, fig. 11–11).

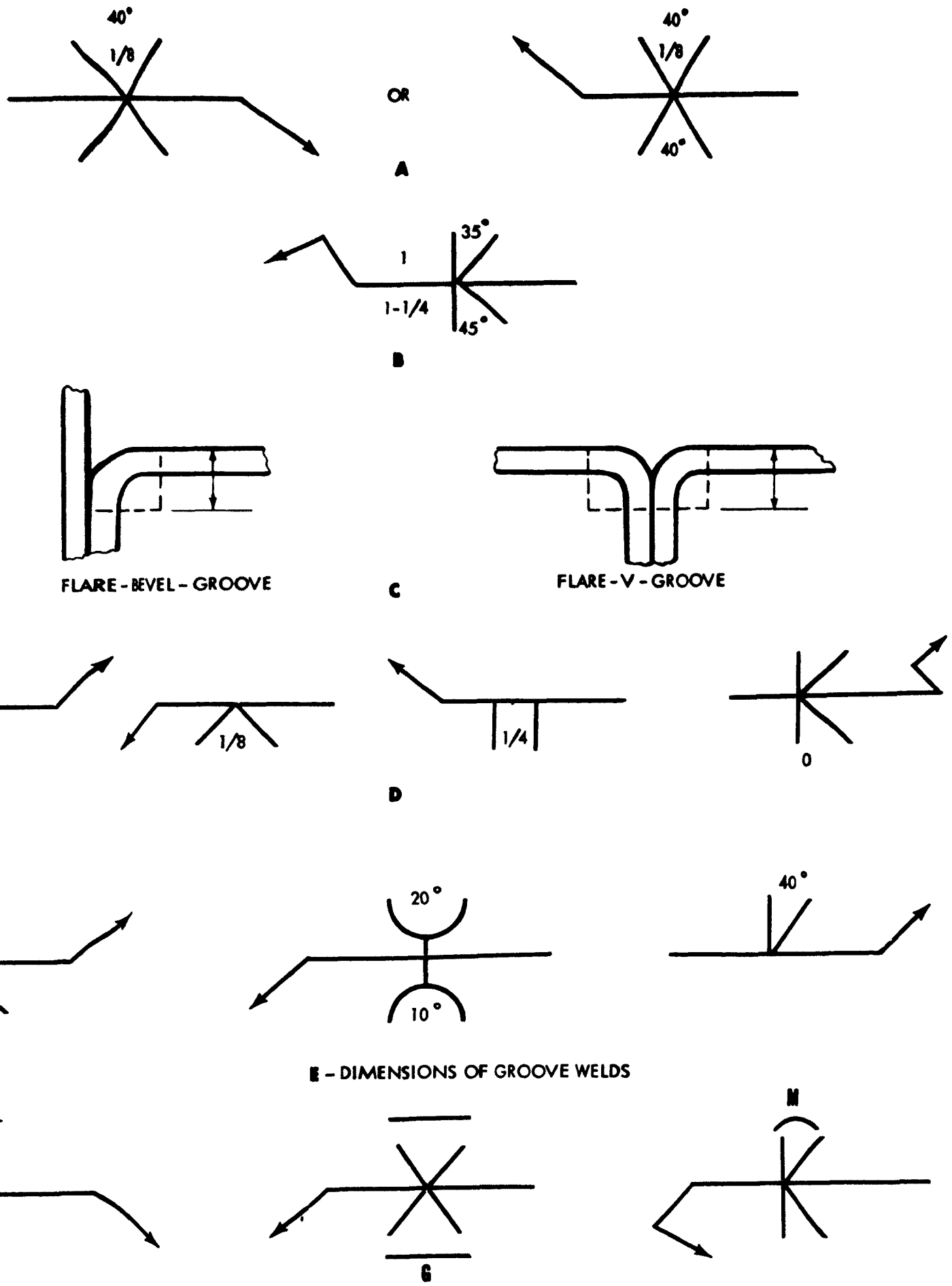

Figure 11-11. Groove weld symbols.

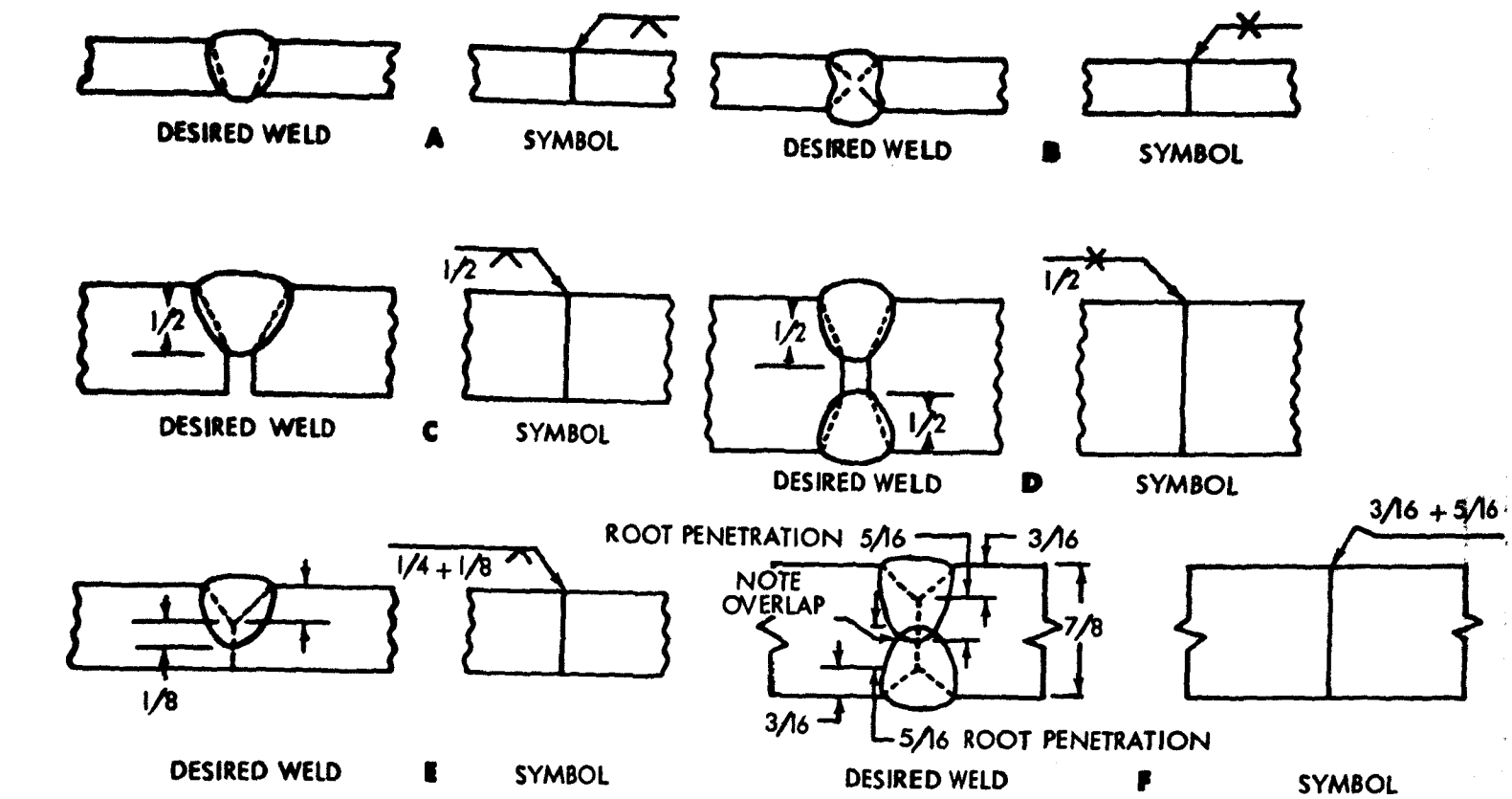

Figure 11–12. Dimensions of groove welds.

c. *Groove Dimensions.* Root opening, groove angle, groove radii and root faces of the U and J groove welds shall be the user's standard unless otherwise indicated. When the user's standard is not used the weld symbols are as follows:

(1) Root opening shall be shown inside the weld symbol (D, figure 11–11).

(2) Groove angle of groove welds shall be shown as in E, figure 11–11.

(3) Groove radii and root faces of U and J groove welds shall be shown by a cross section, detail or other data, with a reference to it on the welding symbol, observing the usual location significance (D, fig. 11–8).

d. *Back and Backing Welds.* Bead type back and backing welds of single groove welds shall be shown by means of the back or backing weld symbol (par. 11–25) (A, fig. 11–13).

e. *Surface Contour of Groove Welds.* The contour symbols for groove welds (C, fig. 11–3) are indicated in the same manner as that for fillet welds.

11–25. Back or Backing Welds

a. *General.* The back or backing weld symbol shall be used to indicate bead type back or backing welds of single groove welds.

(1) Back or backing welds of single groove welds, shall be shown by placing a back or backing weld symbol on the side of the reference line opposite the groove weld symbol.

(2) Dimensions of back or backing welds shall not be shown on the welding symbol. If it is desired to specify these dimensions, they shall be shown on the drawing.

b. *Surface Contour of Back or Backing Welds.* The contour symbols for back or backing welds (C, fig. 11–3) are indicated in the same manner as that for fillet welds (par. 11–21) (B, fig. 11–13).

11–26. Melt-Thru Welds

a. *General.* The melt-thru symbol shall be used where at least 100% joint penetration of the weld through the material is required in welds made from one side only (C, fig. 11–13).

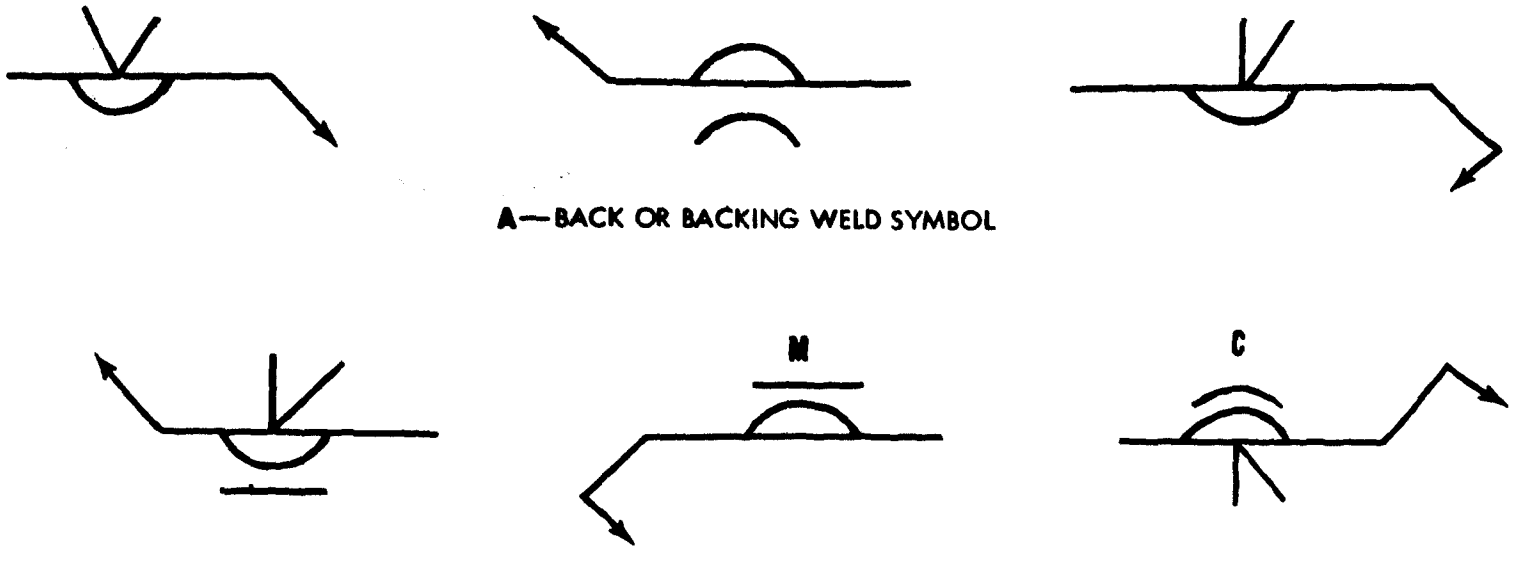

A—BACK OR BACKING WELD SYMBOL

B—SURFACE CONTOUR OF BACK OR BACKING WELDS

C—MELT THRU WELD SYMBOL

D—SURFACE CONTOUR OF MELT THRU WELDS

WE 30263

Figure 11–13. Back or backing weld symbols.

(1) Melt-thru welds shall be shown by placing the melt thru weld symbol (A, fig. 11–3) on the side of the reference line opposite the groove weld or flange weld symbol (C, fig. 11–13).

(2) Dimensions of melt thru welds shall not be shown on the welding symbol. If it is desired to specify these dimensions they shall be shown on the drawing.

b. *Surface Contour of Melt-Thru Welds.* The contour symbols for melt thru welds (C, fig. 11–3) are indicated in the same manner as that for fillet welds, (par. 11–21) (D, fig. 11–13).

11–27. Surfacing Welds

a. *General.* The surfacing weld symbol shall be used to indicate surfaces built up by welding (A, fig. 11–3).

(1) Surfaces built up by welding, whether by single or multiple pass surfacing welds, shall be shown by the surfacing weld symbol (A, fig. 11–14).

(2) The surfacing weld symbol does not indicate the welding of a joint, and hence has no arrow or other side significance. This symbol shall be drawn on the side of the reference line toward the reader and the arrow shall

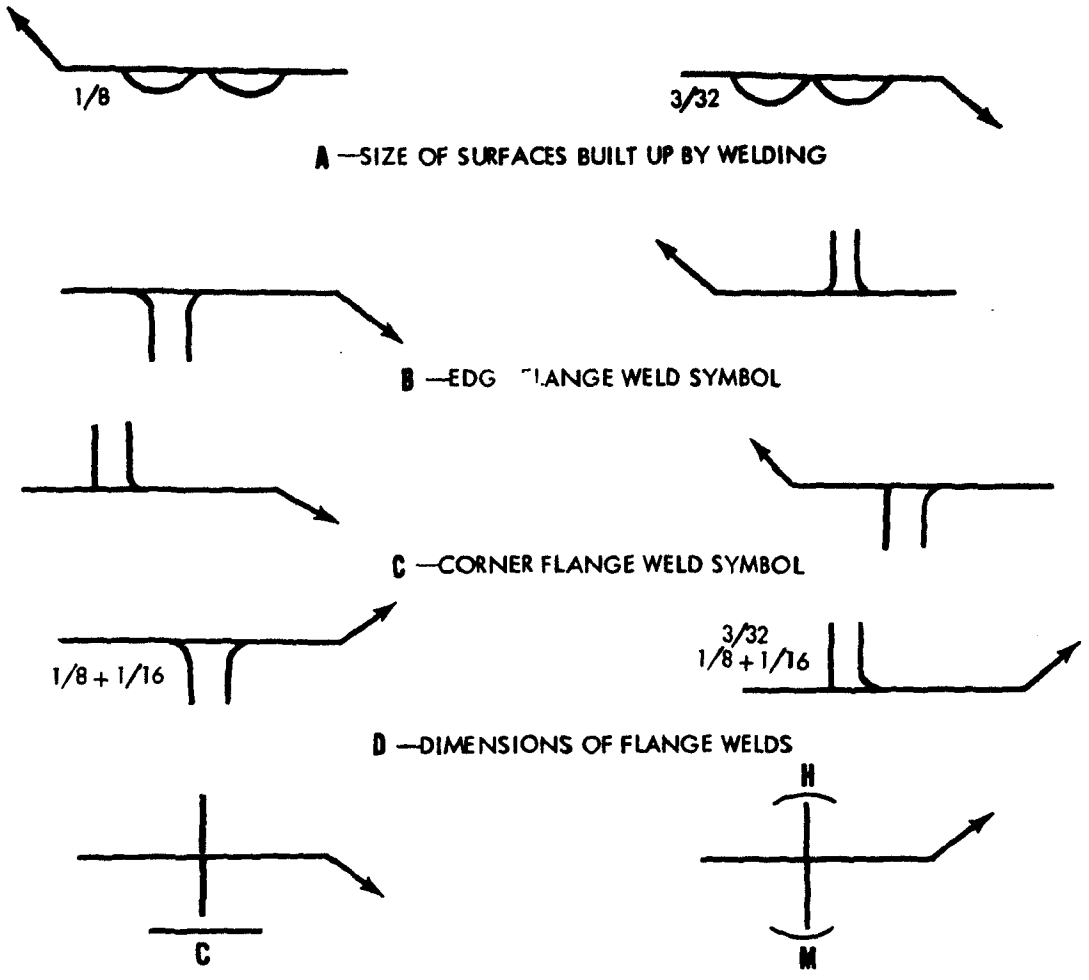

Figure 11–14. Weld symbols.

point clearly to the surface on which the weld is to be deposited.

b. *Size of Built Up Surfaces.* The size (height) of a surface built up by welding shall be indicated by showing the minimum height of the weld deposit to the left of the weld symbol. The dimension shall always be on the same side of the reference line as the weld symbol (A, fig. 11–14). When no specific height of weld deposit is desired, no size dimension need be shown on the welding symbol.

c. *Extent, Location, and Orientation of Surfaces Built Up by Welding.* When the entire area of a plane or curved surface is to be built up by welding, no dimension other than size need be shown on the welding symbol. If a portion of the area of a plane or curved surface is to be built up by welding, the extent, location, and orientation of the area to be built up shall be indicated on the drawing.

11–28. Flange Welds

a. *General.* The following welding symbols are intended to be used for light gage metal joints involving the flaring or flanging of the edges to be joined. These symbols have no both sides significance.

(1) Edge-flange welds shall be shown by the edge flange weld symbol (B, fig. 11–14).

(2) Corner-flange welds shall be shown by the corner flange weld symbol (C, fig. 11–14).

b. *Dimensions of Flange Welds.* Dimensions of flange welds shall be shown on the same side of the reference line as the weld symbol.

(1) The radius and the height above the point of tangency shall be indicated by showing both the radius and the height separated by a plus mark, and placed to the left of the weld symbol. The radius and the height shall read in that order from left to right along the reference line (D, fig. 11–14).

(2) The size of flange welds shall be shown by a dimension placed outward of the flange dimensions (D, fig. 11–14).

(3) Root opening of flange welds shall

not be shown on the welding symbol. If it is desired to specify this dimension, it shall be shown on the drawing.

c. *Multiple Joint Flange Welds.* For flange welds, when one or more pieces are inserted between the two outer pieces, the same symbol as for the two outer pieces shall be used regardless of the number of pieces inserted.

11–29. Resistance Spot Welds

a. *General.* Resistance spot weld symbols (B, fig. 11–3) have no arrow or other side significance in themselves, although supplementary symbols used in conjunction with them may have such significance. Resistance spot weld symbols shall be centered on the reference line. Dimensions may be shown on either side of the reference line.

b. *Size of Resistance Spot Welds.* Resistance spot welds shall be dimensioned by either size or strength as follows:

(1) The size of resistance spot welds shall be designated as the diameter of the weld expressed in fractions or decimally in hundredths of an inch, and shall be shown with or without inch marks to the left of the weld symbol (A, fig. 11–15).

(2) The strength of resistance spot welds shall be designated as the minimum acceptable shear strength in pounds per spot, and shall be shown to the left of the weld symbol (B, fig. 11–15).

c. *Spacing of Resistance Spot Welds.*

(1) The pitch of resistance spot welds shall be shown to the right of the weld symbol (C, fig. 11–15).

(2) When the symbols are shown directly on the drawing the spacing shall be shown in dimensions.

(3) When resistance spot welding extends less than the distance between abrupt changes in the direction of the welding, or less than the full length of the joint, the extend shall be dimensioned (D, fig. 11–15).

d. *Number of Resistance Spot Welds.* When a definite number of welds is desired in a certain joint, the number shall be shown in parentheses either above or below the weld symbol (E, fig. 11–15).

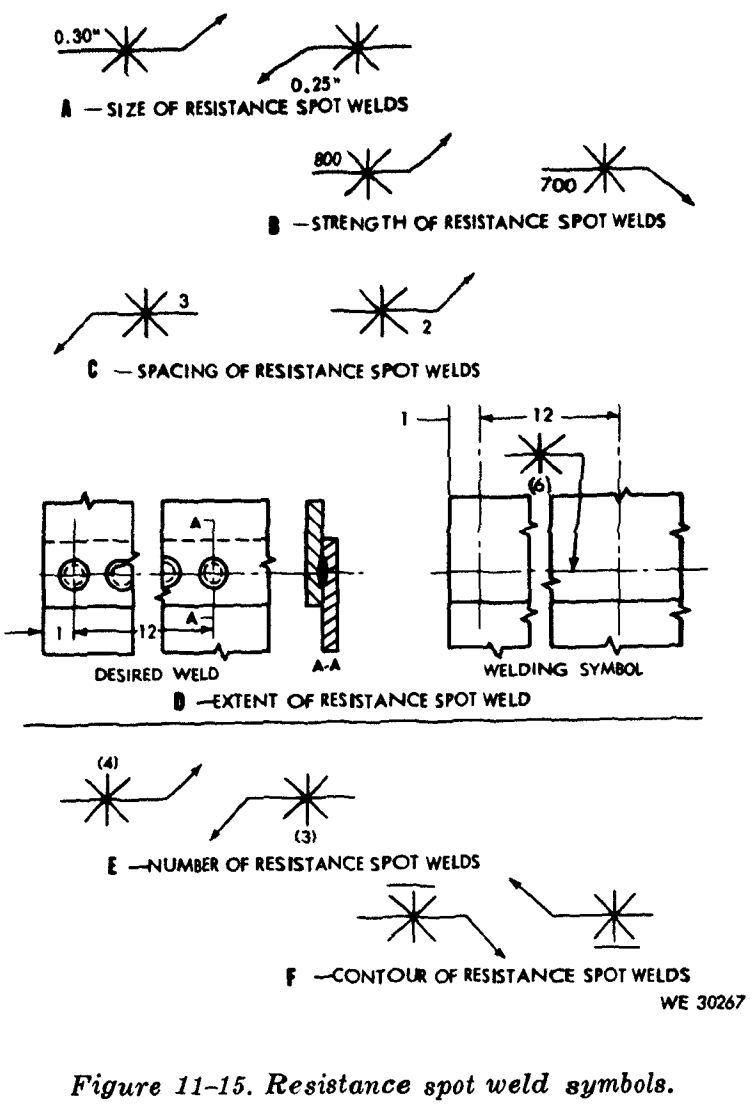

Figure 11–15. Resistance spot weld symbols.

e. *Flush Resistance Spot Welding Joints.* When the exposed surface of one member of a resistance spot welded joint is to be flush that surface shall be indicated by adding the flush contour symbol (C, fig. 11–3) to the weld symbol, observing the usual location significance (F, fig. 11–15).

11–30. Projection Welds

a. *General.*

(1) Embossments on the arrow side member of a joint for projection welding shall be indicated by placing the weld symbol on the side of the reference line toward the reader (A, fig. 11–16).

(2) Embossments on the other side member of a joint for projection welding shall be indicated by placing the weld symbol on the side of the reference line away from the reader (B, fig. 11–16).

(3) Proportions of projections shall be shown by a detail or other suitable means.

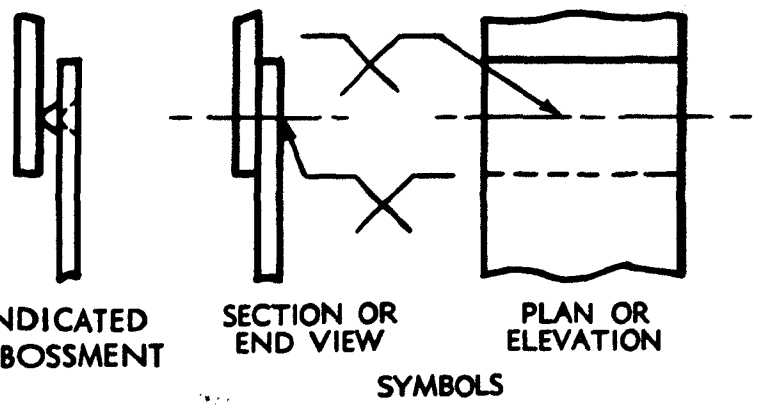

A —EMBOSSMENT ON ARROW-SIDE MEMBER OF JOINT FOR PROJECTION WELDING

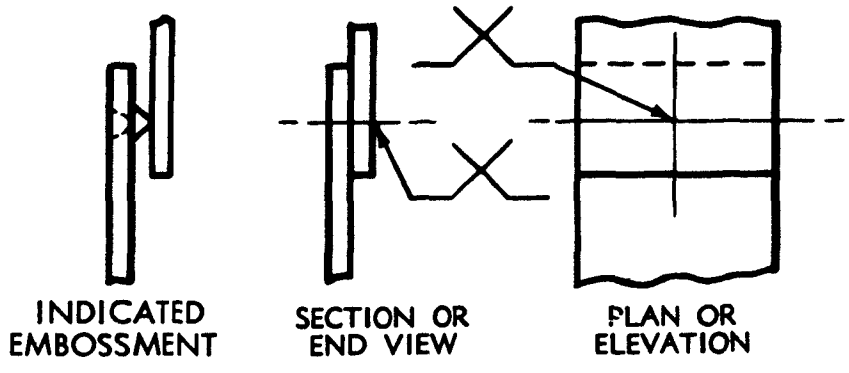

B —EMBOSSMENT ON OTHER-SIDE MEMBER OF JOINT FOR PROJECTION WELDING

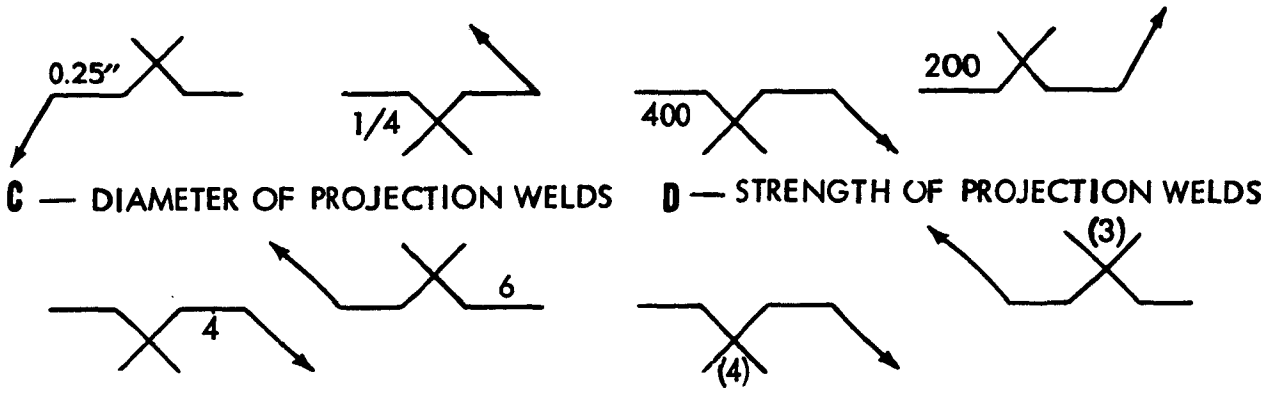

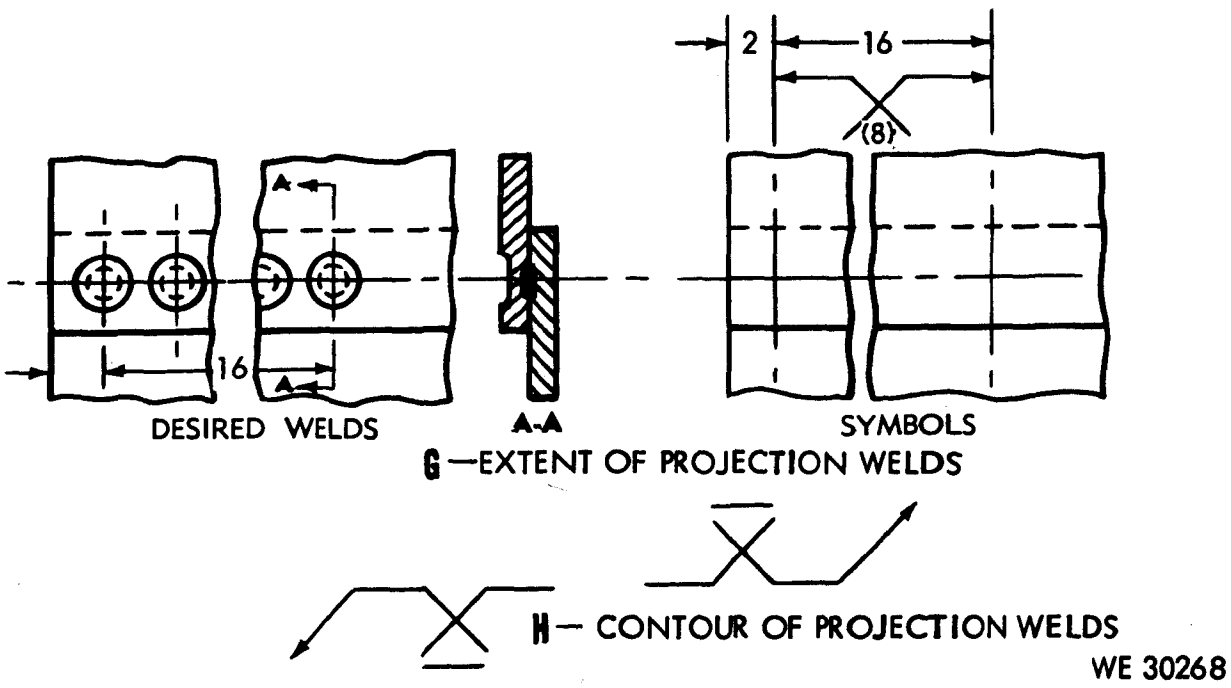

Figure 11–16. Projection weld symbols.

(4) Dimensions of projection welds shall be shown on the same side of the reference line as the weld symbol.

b. *Size of Projection Welds.* Projection welds shall be dimensioned by strength. Circular projection welds may be dimensioned by size.

(1) The size of circular projection welds shall be designated as the diameter of the weld expressed in fractions or decimally in hundredths of an inch and shall be shown with or without inch marks to the left of the weld symbol (C, fig. 11–16).

(2) The strength of projection welds shall be designated as the minimum acceptable shear strength in pounds per weld, and shall be shown to the left of the weld symbol (D, fig. 11–16).

c. *Spacing of Projection Welds.* The pitch of projection welds shall be shown to the right of the weld symbol (E, fig. 11–16).

d. *Number of Projection Welds.* When a definite number of projection welds is desired in a certain joint, the number shall be shown in parentheses (F, fig. 11–16).

e. *Extent of Projection Welding.* When projection welding extends less than the distance between abrupt changes in the direction of the welding, or less than the full length of the joint, the extent shall be dimensioned (G, fig. 11–16) .

f. *Flush Projection Welded Joints.* When the exposed surface of one member of a projection welded joint is to be made flush that surface shall be indicated by adding the flush-contour symbol to the weld symbol, observing the usual location significance (H, fig. 11–16).

11–31. Resistance Seam Welds

a. *General.*

(1) Resistance seam weld symbols have no arrow or other side significance in themselves, although supplementary symbols used in conjunction with them may have such significance. Resistance seam weld symbols shall be centered on the reference line.

(2) Dimensions of resistance seam welds may be shown on either side of the reference line.

b. *Size of Resistance Seam Welds.* Resistance seam welds shall be dimensioned by either size or strength as follows:

(1) The size of resistance-seam welds shall be designated as the width of the weld expressed in fractions, or decimally in hundredths of an inch, and shall be shown with or without inch marks to the left of the weld symbol (A, fig. 11–17).

(2) The strength of resistance seam welds shall be designated as the minimum acceptable shear strength in pounds per linear inch, and shall be shown to the left of the weld symbol (B, fig. 11–17).

c. *Length of Resistance Seam Welds.*

(1) The length of a resistance seam weld, when indicated on the welding symbol, shall be shown to the right of the weld symbol (C, fig. 11–17).

(2) When resistance seam welding extends for the full distance between abrupt changes in the direction of the welding, no length dimension need be shown on the welding symbol.

(3) When resistance seam welding extends less than the distance between abrupt changes in the direction of the welding, or less than the full length of the joint, the extent shall be dimensioned, (D, fig. 11–17).

d. *Pitch Resistance Seam Welds.* The pitch of intermittent resistance seam welding shall be shown as the distance between centers of the weld increments. It shall be shown to the right of the length dimension (E, fig. 11–17).

e. *Termination of Intermittent Resistance Seam Welding.* When intermittent resistance seam welding is used by itself the symbol indicates that increments shall be located at the ends of the dimensioned length. When used between continuous resistance seam welding the symbol indicates that spaces equal to the pitch minus the length of one increment shall be left at the ends of the dimensional length. Separate symbols shall be used for intermittent and continuous resistance seam welding when the two are used in combination.

f. *Flush Resistance Seam Welded Joints.* When exposed surface of one member of a resistance seam welded joint is to be flush that surface shall be indicated by adding the flush contour symbol to the weld symbol, observing the usual location significance (F, fig. 11–17).

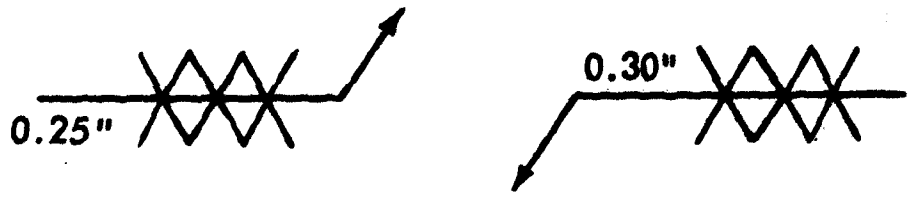

A —SIZE OF RESISTANCE SEAM WELDS

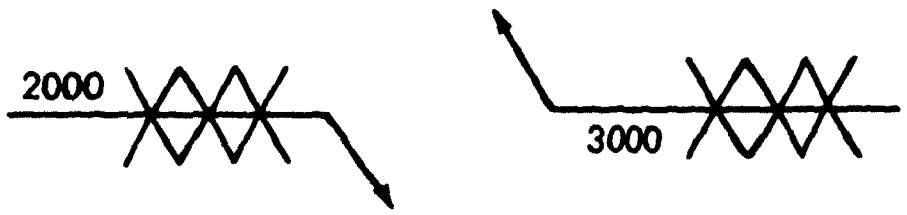

B —STRENGTH OF RESISTANCE SEAM WELDS

C—LENGTH OF RESISTANCE SEAM WELDS

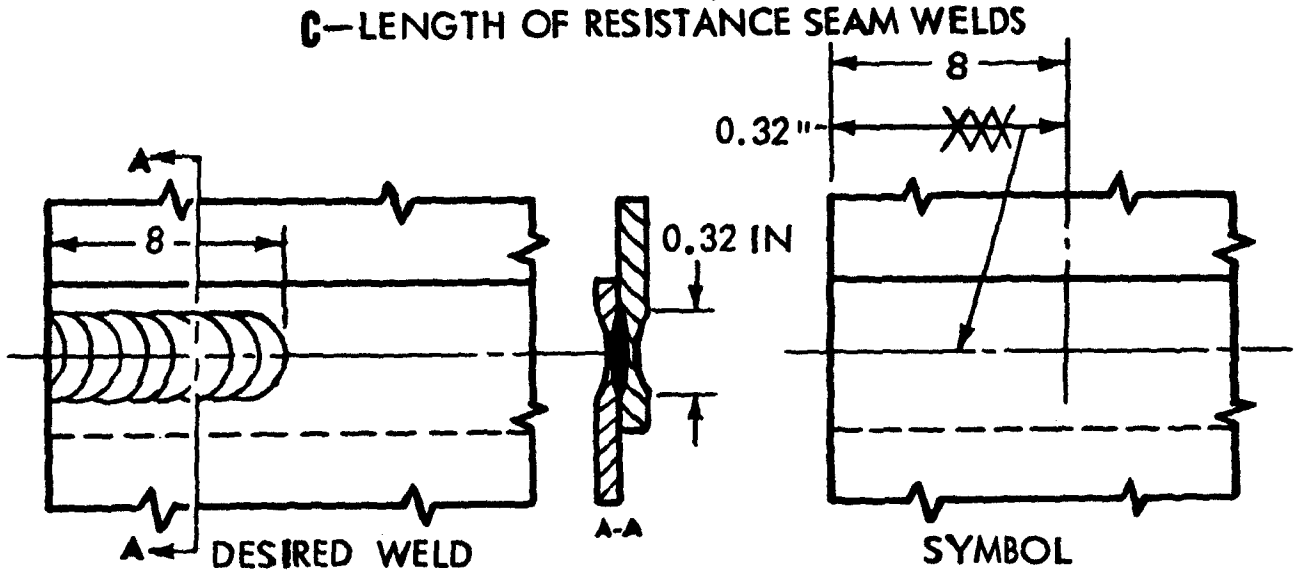

D —EXTENT OF RESISTANCE SEAM WELDS

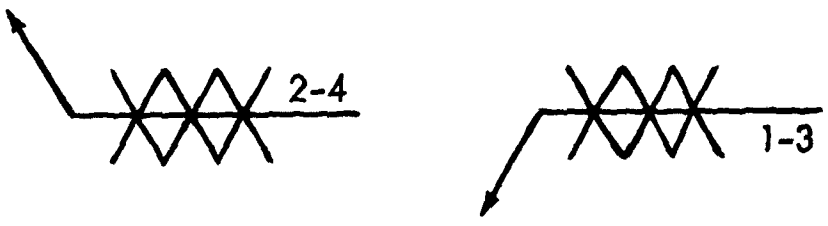

E—DIMENSIONING OF INTERMITTENT RESISTANCE SEAM WELDS

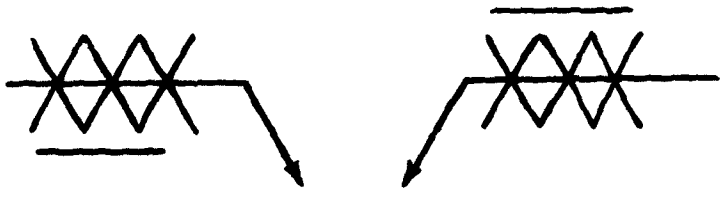

F—CONTOUR OF RESISTANCE SEAM WELDS

WE 30269

Figure 11–17. Resistance seam weld symbols.

11–32. Flash or Upset Welds

a. *General.* Flash or upset weld symbols have no arrow side or other side significance in themselves although supplementary symbols used in conjunction with them may have such significance. The weld symbols for flash or upset welding shall be centered on the reference line. Dimensions shall not be shown on the welding symbol.

b. *Surface Contour of Flash or Upset Welds.* The contour symbols for flash or upset welds (F, fig. 11–3) are indicated in the same manner as that for fillet welds (par. 11–21) (E, fig. 11–14).

CHAPTER 12

GLOSSARY OF WELDING TERMS

Section I. GENERAL

12–1. General

This glossary of welding terms has been prepared to acquaint welding personnel with nomenclatures and definitions of common terms related to welding and allied processes, methods techniques, and applications.

12–2. Scope

The welding terms listed in section II of this chapter are those terms used to describe and define the standard nomenclatures and language used in this manual. This glossary is a very important part of the manual and should be carefully studied and regularly referred to for better understanding of common welding terms and definitions. Terms and nomenclatures listed herein are grouped in alphabetical order.

Section II. WELDING TERMS

12–3. Welding Terms

A

ACETONE: A flammable, volatile liquid used in acetylene cylinders to dissolve and stabilize acetylene under high pressure.

ACETYLENE: A highly combustible gas composed of carbon and hydrogen. Used as a fuel gas in the oxy-acetylene welding process.

ACTUAL THROAT: See throat of fillet weld.

AIR-ACETYLENE: A low temperature flame produced by burning acetylene with air instead of oxygen.

ALLOY: A mixture with metallic properties composed of two or more elements of which at least one is a metal.

ARC BLOW: The swerving of an electric arc from its normal path because of magnetic forces.

ARC BRAZING: An electric brazing process wherein the heat is obtained from an electric arc formed between the base metal and an electrode, or between two electrodes.

ARC CUTTING: A group of cutting processes in which the severing of metals is accomplished by melting with the heat of an arc between an electrode and the base metal. See carbon-arc cutting, metal-arc cutting, and oxy-arc cutting, and air-arc cutting.

ARC WELDING: A group of welding processes in which a fusion is produced by heating with an electric arc or arcs, with or without the use of filler metal.

AS WELDED: The condition of weld metal, welded joints, and weldments after welding and prior to any subsequent thermal or mechanical treatment.

ATOMIC HYDROGEN WELDING: An arc welding process in which a fusion is produced by heating with an electric arc maintained between two metal electrodes in an atmosphere of hydrogen. Pressure and/or filler metal may or may not be used.

AXIS OF A WELD: A line through the length of a weld, perpendicular to a cross section at its center of gravity.

B

BACK PASS: A pass made to deposit a back weld.

BACK STEP: A sequence in which weld bead increments are deposited in a direction opposite to the direction of progress.

BACK WELD: A weld deposited at the back of a single groove weld.

BACK FIRE: The momentary burning back of a flame into the tip, followed by a snap or pop, then immediate reappearance or burning out of the flame.

BACKHAND WELDING: A welding technique in which the flame is directed towards the completed weld.

BACKING STRIP: A piece of material used to retain molten metal at the root of the weld and/or increase the therman capacity of the joint so as to prevent excessive warping of the base metal.

BACKING WELD: Backing in the form of a weld.

BACK UP: In flash and upset welding, a locator used to transmit all or a portion of the upsetting force to the work pieces.

BARE ELECTRODE: An arc welding electrode that has no coating other than that incidental to the drawing of the wire.

BARE METAL-ARC WELDING: An arc welding process in which fusion is produced by placing an unshielded arc between a bare or lightly coated electrode and the work. Pressure is not used and filler metal is obtained from the electrode.

BASE METAL: The metal to be welded or cut. In alloys it is the metal present in the largest proportion.

BEAD WELD: A type of weld composed of one or more string or weave beads deposited on an unbroken surface.

BEADING: See string bead and weave bead.

BEVEL ANGLE: The angle formed between the prepared edge of a member and a plane perpendicular to the surface of the member.

BLACKSMITH WELDING: See forge welding.

BLOCK BRAZING: A brazing process in which fusion is produced by the heat obtained from heated blocks applied to the parts to be joined and by a nonferrous filler metal having a melting point above 800 deg F, but below that of the base metal. The filler metal is distributed in the joint by capillary attraction.

BLOCK SEQUENCE: A building up sequence of continuous multipass welds in which separated lengths of the weld are completely or partially built up before intervening lengths and deposited. See buildup sequence.

BLOW HOLE: See gas pocket.

BOND: The junction of the welding metal and the base metal.

BOXING: The operation of continuing a fillet, weld around a corner of a member as an extension of the principal weld.

BRAZE WELDING: A method of welding in which a groove, fillet, plug or slot weld is made by using a nonferrous filler metal having a melting point below that of the base metals but above 800 deg F. The filler metal is not distributed in the joint by capillary attraction.

BRAZING: A group of welding processes in which fusion is produced by heating to a suitable temperature above 800 deg F, and by using a nonferrous filler metal having a melting point below that of the base metals. Filler metal is distributed between the closely fitted surfaces of the joint by capillary attraction.

BRIDGING: A welding defect caused by poor penetration. A void at the root of the weld is spanned by weld metal.

BUCKLING: Distortion caused by the heat of a welding process.

BUILDUP SEQUENCE: The order in which the weld beads of a multipass weld are deposited with respect to the cross section of a joint. See block sequence.

BUTT JOINT: A joint between two base metals in such a manner that the weld joining the parts is between the surface planes of both the parts joined.

BUTT WELD: A weld in a butt joint.

C

CAPILLARY ATTRACTION: The phenomenon by which adhesion between the molten filler metal and the base metals, together with surface tension of the molten filler metal, causes distribution of the filler metal between the properly fitted surfaces of the joint to be brazed.

CARBON ARC CUTTING: A process of severing metals with the heat of a carbon arc.

CARBON ARC WELDING: A welding process in which fusion is produced by placing an arc between a carbon electrode and the

work. Pressure and/or filler metal and/or shielding may or may not be used.

CARBURIZING FLAME: An oxy-acetylene flame in which there is an excess of acetylene. Also called excess acetylene or reducing flame.

CASCADE SEQUENCE: Subsequent beads are stopped short of a previous bead giving a cascade effect.

CHAIN INTERMITTENT FILLET WELDS: Two lines of intermittent filler welds in a T or lap joint in which the welds in one line are approximately opposite those in the other line.

CHAMFERING: The preparation of a contour, other than for a square groove weld for welding on the edge of a member.

COATED ELECTRODE: An electrode having a flux applied externally by dipping, spraying, painting or other similar methods. Upon burning the coat produces a gas around the arc.

COMMUTATORY CONTROLLED WELDING: The making of a number of spot or projection welds in which several electrodes, in simultaneous contact with the work, progressively function under the control of an electrical commutating device.

COMPOSITE ELECTRODE: A filler metal electrode used in arc welding, consisting of more than one metal component combined mechanically. It may or may not include materials that improve the properties of the weld, or stabilize the arc.

COMPOSITE JOINT: A joint in which a thermal and mechanical process is used to unite the base metal parts.

CONCAVITY: The maximum distance from the face of a concave fillet weld perpendicular to a line joining the toes.

CONCURRENT HEATING: Supplemental heat applied to a structure during the course of welding.

CONE: The conical part of a gas flame next to the orifice of the tip.

CONVEXITY: The maximum distance from the face of a convex fillet weld perpendicular to a len joining the toes.

CORNER JOINT: A joint between two members located approximately at right angles to each other in the form of an L.

COVER GLASS: A clear glass used in goggles, hand shields, and helmets to protect the filter glass from splattering material.

COVERED ELECTRODE: A metal electrode with a covering material which stabilizes the arc and improves the properties of the welding metal. The material may be an external wrapping of paper, asbestos and other materials or flux covering

CRATER: A depression at the termination of an arc weld.

CURRENT DENSITY: Amperes per square inch of the electrode sectional area.

CUTTING TIP: A gas torch tip especially adapted for cutting.

CUTTING TORCH: A device used in gas cutting for controlling the gases used for preheating and the oxygen used for cutting the metal.

CYLINDER: A portable cylindrical container used for transportation and storage of a compressed gas.

D

DEPOSITED METAL: Filler metal that has been added during a welding operation.

DEPOSITION EFFICIENCY: The ratio of the weight of deposited metal to the net weight of electrodes consumed exclusive of stubs.

DEPTH OF FUSION: The distance from the original surface of the base metal to that point at which fusion ceases in a welding operation.

DIE:

a. Resistance Welding. A member, usually shaped to the work contour, used to clamp the parts being welded and conduct the welding current.

b. Forge Welding. A device used in forge welding primarily to form the work while hot and apply the necessary pressure.

DIE WELDING: A forge welding process in which fusion is produced by heating in a furnace and by applying pressure by means of dies.

DIP BRAZING: A brazing process in which fusion is produced by heating in a molten chemical or metal bath and by using a nonferrous filler metal having a melting point above 800° F, but below that of the base metals. The filler metal is distributed in the

joint by capillary attraction. When a metal bath is used the bath provides the filler metal.

DRAG: The horizontal distance between the entrance and the point of exit of a cutting oxygen stream.

E

EDGE JOINT: A joint between the edges of two or more parallel or nearly parallel members. (fig. 3–7).

EDGE PREPARATION: The contour prepared on the edge of a member for welding.

EFFECTIVE LENGTH OF WELD: The length of a weld throughout which the correctly proportioned cross section exists.

ELECTRODE:

a. Metal Arc—Filler metal in the form of a wire or rod, whether bare or covered, through which current is conducted between the electrode holder and the arc.

b. Carbon Arc—A carbon or graphite rod through which current is conducted between the electrode holder and the arc.

c. Atomic Hydrogen—One of the two tungsten rods between the points of which the arc is maintained.

d. Electrolytic Oxygen-Hydrogen Generation —The conductors by which current enters and leaves the water, which is decomposed by the passage of the current.

e. Resistance Welding—The part or parts of a resistance welding machine through which the welding current and the pressure are applied directly to the work.

ELECTRODE FORCE:

a. Dynamic—In spot, seam, and projection welding, the force (pounds) between the electrodes during the actual welding cycle.

b. Theoretical—In spot, seam, and projection welding, the force, neglecting friction and inertia, available at the electrodes of a resistance welding machine by virtue of the initial force application and the theoretical mechanical advantage of the system.

c. Static—In spot, seam, and projection welding, the force between the electrodes under welding conditions, but with no current flowing and no movement in the welding machine.

ELECTRODE HOLDER: A device used for mechanically holding the electrode and conducting current to it.

ELECTRODE SKID: The sliding of an electrode along the surface of the work during spot, seam, or projection welding.

ETCHING: A process of preparing metallic specimens and welds for macrographic or micrographic examination.

F

FACE OF WELD: The exposed surface of a weld, made by an arc or gas welding process, on the side from which welding was done.

FACE SHIELD: A protective device to be worn on the head for shielding the face and neck.

FAYING SURFACE: That surface of a member that is in contact with another member to which it is joined.

FILLER METAL: Metal to be added in making a weld.

FILLET WELD: A weld of approximately triangular cross section, as used in a lap joint, tie joint or corner joint, joining two surfaces at approximately right angles to each other.

FILTER GLASS: A colored glass used in goggles, helmets, and shields to exclude harmful light rays.

FLAME CUTTING: See oxygen cutting.

FLAME GOUGING: See oxygen gouging.

FLAME HARDENING: A method for hardening a steel surface by heating followed by a rapid quench.

FLAME SOFTENING: A method for softening steel by heating with a gas flame followed by slow cooling.

FLASH: Metal and oxide expelled from a joint made by a resistance welding process.

FLASH WELDING: A resistance welding process in which fusion is produced, simultaneously over the entire area of abutting surfaces, by the heat obtained from resistance to the flow of current between two surfaces and by the application of pressure after heating is substantially completed. Flashing is accompanied by expulsion of metal from the joint.

FLASHBACK: The burning of gases within the torch or beyond the torch in the hose, usually with a shrill, hissing sound.

FLAT POSITION: The position in which

welding is performed from the upper side of the joint and the face of the weld is approximately horizontal (fig. 6–7).

FLOW BRAZING: A process in which fusion is produced by heating with a molten nonferrous filler metal poured over the joint until the brazing temperature is attained. See brazing.

FLOW WELDING: A process in which fusion is produced by heating with molten filler metal poured over the surfaces to be welded until the welding temperature is attained and the required filler metal has been added. The filler metal is not distributed in the joint by capillary attraction.

FLUX: A cleaning agent used to dissolve oxides, release trapped gases and slag and to cleanse metals for welding, soldering and brazing.

FOREHAND WELDING: A gas welding technique in which the flame is directed against the base metal ahead of the completed weld. (fig. 6–2).

FORGE WELDING: A group of welding processes in which fusion is produced by heating in a force or furnace and by applying pressure or blows.

FREE BEND TEST: A method of testing weld specimens without the use of a guide.

FULL FILLET WELD: A fillet weld whose size is equal to the thickness of the thinner member joined.

FURNACE BRAZING: A process in which fusion is produced by the furnace heat and a nonferrous filler metal having a melting point above 800 deg F., but below that of the base metals. The filler metal is distributed in the joint by capillary attraction.

FUSION: A thorough and complete mixing between the two edges of the base metal to be joined or between the base metal and the filler metal added during welding.

FUSION ZONE (FILLER PENETRATION): The area of base metal melted as determined on the cross section of a weld. (fig. 3–2).

G

GAS POCKET: A weld cavity caused by the trapping of gases released by the metal when cooling.

GAS WELDING: A process in which the welding heat is obtained from a gas flame.

GOGGLES: A device with colored lenses which protect the eyes from harmful radiation during welding and cutting operations.

GROOVE: The opening provided between two members to be joined by a groove weld.

GROOVE ANGLE: The total included angle of the groove between parts to be joined by a groove weld.

GROOVE FACE: That surface of a member included in the groove.

GROOVE RADIUS: The radius of a JF or UF groove.

GROOVE WELD: A weld made by depositing filler metal in a groove between two members to be joined. (Different types of groove welds are shown in fig. 3–11).

GROOVE WELD: A weld made by depositing filler metal in a groove between two members to be joined. (Different types of groove welds are shown in fig. 3–11).

GROUND CONNECTION: The connection of the work lead to the work.

GROUND LEAD: See work lead.

GUIDED BEND TEST: A bending test in which the test specimen is bent to a definite shape by means of a jig.

H

HAMMER WELDING: A forge welding process.

HAND SHIELD: A device used in arc welding to protect the face and neck. It is equipped with a filter glass lens and is designed to be held by hand.

HARD SURFACING: The application of a hard, wear resistant alloy to the surface of a softer metal.

HEAT AFFECTED ZONE: That portion of the base metal whose structure or properties have been changed by the heat of welding or cutting.

HEAT TIME: The duration of each current impulse in pulsation welding.

HEATING GATE: The opening in a thermit mold through which the parts to be welded are preheated.

HELMET: A device used in arc welding to protect the face and neck. It is equipped with a filter glass and is designed to be worn on the head.

HOLD TIME: The time that pressure is main-

tained at the electrodes after the welding current has stopped.

HORIZONTAL WELD: A bead or butt welding process with its linear direction horizontal or inclined at an angle less than 45 deg to the horizontal, and the parts welded being vertically or approximately vertically disposed.

HORN: The electrode holding arm of a resistance spot welding machine.

HORN SPACING: In a resistance welding machine, the unobstructed work clearance between horns or platens at right angles to the throat depth. This distance is measured with the horns parallel and horizontal at the end of the downstroke.

HOT SHORT: A condition which occurs when a metal is heated to that point, prior to melting, where all strength is lost but the shape is still maintained.

HYDROGEN BRAZING: A method of furnace brazing in a hydrogen atmosphere.

HYDROMATIC WELDING: See pressure controlled welding.

I

IMPREGNATED - TAPE METAL - ARC WELDING: An arc welding process in which fusion is produced by heating with an electric arc between a metal electrode and the work. Shielding is obtained from decomposition of an impregnated tape wrapped around the electrode as it is fed to the arc. Pressure is not used, and filler metal is obtained from the electrode.

INDUCTION BRAZING: A process in which fusion is produced by the heat obtained from resistance of the work to the flow of induced electric current and by using a non-ferrous filler metal, have a melting point above 800 deg F but below that of the base metals. The filler metal is distributed in the joint by capillary attraction.

INDUCTION WELDING: A process in which fusion is produced by heat obtained from resistance of the work to the flow of induced electric current, with or without the application of pressure.

INERT-GAS CARBON-ARC WELDING: An arc welding process in which fusion is produced by heating with an electric arc between a carbon electrode and the work. Shielding is obtained from an inert gas such as helium or argon. Pressure and/or filler metal may or may not be used.

INERT-GAS METAL-ARC WELDING (MIG): An arc welding process in which fusion is produced by heating with an electric arc between a metal electrode and the work. Shielding is obtained from an inert gas such as helium or argon. Pressure and/or filler metal may or may not be used.

INERT-GAS SHIELDED-ARC WELDING (TIG): An arc welding process in which fusion is produced by heating with an electric arc between a tungsten electrode and the work while an inert gas flows around the weld area to prevent oxidation. No flux is used.

INTERPASS TEMPERATURE: In a multipass weld, the lowest temperature of the deposited weld metal before the next pass is started.

J

JOINT: That portion of a structure in which separate base metal parts are joined.

JOINT PENETRATION: The maximum depth a groove weld extends from its face into a joint, exclusive of reinforcement.

K

KERF: The space from which metal has been removed by a cutting process.

L

LAP JOINT: A joint between two overlapping members.

LAYER: A stratum of weld metal, consisting of one or more weld beads.

LEG OF A FILLET WELD: The distance from the root of the joint to the toe of the fillet weld. (fig. 3-2).

LOCAL PREHEATING: Preheating a specific portion of a structure.

LOCAL STRESS RELIEF HEAT TREATMENT: Stress relief heat treatment of a specific portion of a structure.

M

MANIFOLD: A multiple header for connecting several cylinders to one or more torch supply lines.

MASH SEAM WELDING: A seam weld made in a lap joint in which the thickness at the lap is reduced plastically to approximately the thickness of one of the lapped joints.

MELTING POINT: The temperature at which a metal begins to liquidify.

MELTING RATE: The weight or length of electrode melted in a unit of time.

METAL ARC CUTTING: The process of severing metals by melting with the heat of the metal arc.

METAL ARC WELDING: An arc welding process in which a metal electrode is held so that the heat of the arc fuses both the electrode and the work to form a weld.

METALLIZING: A method of overlay or metal bonding to repair worn parts.

MIXING CHAMBER: That part of a welding or cutting torch in which the gases are mixed for combustion.

MULTI IMPULSE WELDING: The making of spot, projection, and upset welds by more than one impulse of current. When alternating current is used each impulse may consist of a fraction of a cycle or a number of cycles.

N

NEUTRAL FLAME: A gas flame in which the portion used is neither oxidizing or reducing.

NICK BREAK TEST: A method for testing the soundness of welds by nicking each end of the weld, then giving the test specimen a sharp hammer blow to break the weld from nick to nick. Visual inspection will show any weld defects.

NONFERROUS: Metals which contain no iron. Aluminum, brass, bronze, copper and lead are nonferrous.

NUGGET: The fused metal zone of a resistance weld.

O

OPEN CIRCUIT VOLTAGE: The voltage between the terminals of the welding source when no current is flowing in the welding circuit.

OVERHEAD POSITION: The position in which welding is performed from the underside of a joint and the face of the weld is approximately horizontal.

OVERLAP: The protrusion of weld metal beyond the bond at the toe of the weld.

OXIDIZING FLAME: A flame in which the oxygen combines with all the acetylene or fuel available and then the excess oxygen oxidizes the metal.

OXY-ACETYLENE CUTTING: An oxygen cutting process in which the necessary cutting temperature is maintained by flames obtained from the combustion of acetylene with oxygen.

OXY-ACETYLENE WELDING: A welding process in which the required temperature is attained by flames obtained from the combustion of acetylene with oxygen.

OXY-ARC CUTTING: An oxygen cutting process in which the necessary cutting temperature is maintained by means of an arc between an electrode and the base metal.

OXY-CITY GAS CUTTING: An oxygen cutting process in which the necessary cutting temperature is maintained by flames obtained from the combustion of city gas with oxygen.

OXY-HYDROGEN CUTTING: An oxygen cutting process in which the necessary cutting temperature is maintained by flames obtained by the combustion of hydrogen with oxygen.

OXY-HYDROGEN WELDING: A gas welding process in which the required welding temperature is attained by flames obtained from the combustion of hydrogen with oxygen.

OXY-NATURAL GAS CUTTING: An oxygen cutting process in which the necessary cutting temperature is maintained by flames obtained from the combustion of natural gas with oxygen.

OXY-PROPANE CUTTING: An oxygen cuttine process in which the necessary cutting temperature is maintained by flames obtained from the combustion of propane with oxygen.

OXYGEN CUTTING: A process of severing ferrous metals by means of the chemical action of oxygen on elements in the base metal at elevated temperatures.

OXYGEN GOUGING: An application of oxygen cutting in which a chamfer or groove is formed.

P

PASS: The weld metal deposited in one general progression along the axis of the weld.

PEENING: The mechanical working of metals by means of hammer blows. Peening tends to stretch the surface of the cold metal, thereby relieving contraction stresses.

PENETRANT INSPECTION:

a. Fluorescent—A water washable penetrant with high fluorescense and low surface tension. It is drawn into small surface openings by capillary action. When exposed to black light the dye will fluoresce.

b. Dye—A process which involves the use of three non-corrosive liquids. First, the surface cleaner solution is used. Then the penetrant is applied and allowed to stand at least 5 minutes. After standing, the penetrant is removed with the cleaner solution and the developer is applied. The dye penetrant, which has remained in the surface discontinuity, will be drawn to the surface by the developer resulting in bright red indications.

PERCUSSIVE WELDING: A resistance welding process in which a discharge of electrical energy and the application of high pressure occurs simultaneously, or with the electrical discharge occuring slightly before the application of pressure.

PITCH: Center to center spacing of welds.

PLUG WELD: A weld is made in a hole in one member of a lap joint, joining that member to that portion of the surface of the other member which is exposed through the hole. The walls of the hole may or may not be parallel, and the hole may be partially or completely filled with the weld metal.

POKE WELDING: A spot welding process in which pressure is applied manually to one electrode. The other electrode is clamped to any part of the metal much in the same manner that are welding is grounded.

POROSITY: The presence of gas pockets or inclusions in welding.

POSITIONS OF WELDING: All welding is accomplished in one of four positions: flat; horizontal; overhead; and vertical. The limiting angles of the various positions depend somewhat as to whether the weld is of a fillet or groove type.

POSTWELD INTERVAL: In resistance welding, the heat time between the end of weld time, or weld interval, and the start of hold time. During this interval, the weld is subjected to mechanical and heat treatment.

PREHEATING: The application of heat to a base metal prior to a welding or cutting operation.

PRESSURE CONTROLLED WELDING: The making of a number of spot or projection welds in which several electrodes function progressively under the control of a pressure sequencing device.

PRESSURE WELDING: Any welding process or method in which pressure is used to complete the weld.

PREWELD INTERVAL: In spot, projection, and upset welding, the time between the end of squeeze time and the start of weld time or weld interval during which the material is preheated. In flash welding, it is time during which the material is preheated.

PROJECTION WELDING: A resistance welding process between two or more surfaces or between the ends of one member and the surface of another. The welds are localized at predetermined points or projections.

PULSATION WELDING: A spot, projection, or seam welding process in which the welding current is interrupted one or more times without the release of pressure or change of location of electrodes.

PUSH WELDING: The making of a spot or projection weld in which the force is applied manually to one electrode and the work or a backing bar takes the place of the other electrode.

Q

QUENCHING: The sudden cooling of heated metal with oil, water, or compressed air.

R

REACTION STRESS: The residual stress which could not otherwise exist if the members or parts being welded were isolated as free bodies without connection to other parts of the structure.

REDUCING FLAME: See carburizing flame.

REGULATOR: A device used to reduce cylinder pressure to a suitable torch working pressure.

REINFORCED WELD: The weld metal is built up above the general surface of the two abutting sheets or plates in excess of that required for the size of the weld specified.

RESIDUAL STRESS: Stress remaining in a

structure or member as a result of thermal and/or mechanical treatment.

RESISTANCE BRAZING: A brazing process in which fusion is produced by the heat obtained from resistance to the flow of electric current in a circuit of which the work is a part and by using a nonferrous filler metal having a melting point above 800 deg F, but below that of the base metals. The filler metal is distributed in the joint by capillary attraction.

RESISTANCE BUTT WELDING: A group of resistance welding processes in which the weld occurs simultaneously over the entire contact area of the parts being joined.

RESISTANCE WELDING: A group of welding processes in which fusion is produced by heat obtained from resistance of the work to the flow of electric current in a circuit of which the work is a part and by the application of pressure.

REVERSE POLARITY: The arrangement of direct current arc welding leads in which the work is the negative pole and the electrode is the positive pole of the welding arc.

ROOT: See root of joint and root of weld.

ROOT CRACK: A crack in the weld or base metal which occurs at the root of a weld.

ROOT EDGE: The edge of a part to be welded which is adjacent to the root.

ROOT FACE: The prepared edge of a member to be joined by a groove weld which is not beveled or grooved. (fig. 3–3).

ROOT OF JOINT: That position of a joint to be welded where the members approach closest to each other. In cross section, the root of a joint may be a point, a line, or an area.

ROOT OF WELD: The points, as shown in cross section, at which the bottom of the weld intersects the base metal surfaces.

ROOT OPENING: The separation between the members to be joined at the root of the joint.

ROOT PENETRATION: The depth a groove weld extends into the root of a joint measured on the centerline of the root cross section.

S

SCARF: The chamfered surface of a joint.

SCARFING: A process for removing defects and checks which develop in the rolling of steel billets by the use of a low velocity oxygen deseaming torch.

SEAL WELD: A weld used primarily to obtain tightness and to prevent leakage.

SEAM WELDING: Welding a lengthwise seam in sheet metal either by abutting or overlapping joints.

SELECTIVE BLOCK SEQUENCE: A block sequence in which successive blocks are completed in a certain order selected to create a predetermined stress pattern.

SERIES WELDING: A resistance welding process in which two or more welds are made simultaneously by a single welding transformer with the total current passing through each weld.

SHEET SEPARATION: In spot, seam, and projection welding, the gap surrounding the weld between faying surfaces, after the joint has been welded.

SHIELDED WELDING: An arc welding process in which protection from the atmosphere is obtained from a flux, decomposition of the electrode covering, or an inert gas.

SHOULDER: See root face.

SHRINKAGE STRESS: See residual stress.

SINGLE-IMPULSE WELDING: The making of spot projection and upset welds by a single impulse of current. When alternating current is used, an impulse may consist of a fraction of a cycle or a number of cycles.

SIZE OF WELD:

a. Groove weld—The joint penetration (depth of chamfering plus the root penetration when specified).

b. Equal leg fillet welds—The leg length of the largest isosceles right triangle which can be inscribed within the fillet weld cross section.

c. Unequal leg fillet welds—The leg length of the largest right triangle which can be inscribed within the fillet weld cross section.

d. Flange weld—The weld metal thickness measured at the root of the weld.

SKIP SEQUENCE: See wandering sequence.

SLAG INCLUSION: Non-metallic solid material entrapped in the weld metal or between the weld metal and the base metal.

SLOT WELD: A weld made in an elongated hole in one member of a lap or tee joint joining that member to that portion of the surface of the other member which is ex-

posed through the hole. The hole may be open at one end and may be partially or incompletely filled with weld metal. (A fillet welded slot should not be construed as conforming to this definition).

SLUGGING, Adding a separate piece or pieces of material in a joint before or during welding with a resultant welded joint that does not comply with design, drawing, or specification requirements.

SPACER STRIP: A metal strip or bar inserted in the root of a joint prepared for a groove weld to serve as a backing and to maintain the root opening during welding.

SPATTER: The metal particles expelled during arc and gas welding which do not form a part of the weld.

SPOT WELDING: A resistance welding process in which fusion is produced by the heat obtained from the resistance to the flow of electric current through the work parts held together under pressure by electrodes. The size and shape of the individually formed welds are limited by the size and contour of the electrodes.

STAGGERED INTERMITTENT FILLET WELD: Two lines of intermittent welding on a joint, such as a tee joint, wherein the fillet increments in one line are staggered with respect to those in the other line.

STORED ENERGY WELDING: The making of a weld with electric energy accumulated electrostatically, electromagnetically, or electrochemically at a relatively low rate and made available at the required welding rate.

STRAIGHT POLARITY: The arrangement of direct current arc welding leads in which the work is the positive pole and the electrode is the negative pole of the welding arc.

STRESS RELIEF HEAT TREATMENT: Uniform heating of a structure or portion thereof to a sufficient temperature, below the critical range, to relieve the major portion of the residual stresses, followed by uniform cooling. (Terms normalizing, annealing, etc., are misnomers for this application).

STRING BEAD WELDING: A method of metal arc welding on pieces 3/4 inch thick or heavier in which the weld metal is deposited in layers composed of strings of beads applied directly to the face of the bevel.

STUD WELDING: An arc welding process in which fusion is produced by heating with an electric arc drawn between a metal stud, or similar part, and the other work part, until the surfaces to be joined are properly heated. They are brought together under pressure.

SUBMERGED ARC WELDING: An arc welding process in which fusion is produced by heating with an electric arc or arcs between a bare metal electrode or electrodes and the work. The welding is shielded by a blanket of granular, fusible material on the work. Pressure is not used, filler metal is obtained from the electrode, and sometimes from a supplementary welding rod.

SURFACING: The deposition of filler metal or a metal surface to obtain desired properties or dimensions.

T

TACK WELD: A weld made to hold parts of a weldment in proper alinement until the final welds are made.

TEE JOINT: A joint between two members located approximately at right angles to each other in the form of a T.

TEMPER TIME: In resistance welding, that part of the postweld interval during which a current suitable for tempering or heat treatment flows. The current can be be single or multiple impulse, with varying heat and cool intervals.

THERMIT CRUCIBLE: The vessel in which the thermit reaction takes place.

THERMIT MIXTURE: A mixture of metal oxide and finely divided aluminum with the addition of alloying metals as required.

THERMIT MOLD: A mold formed around the parts to be welded to receive the molten metal.

THERMIT REACTION: The chemical reaction between metal oxide and aluminum which produces superheated molten metal and aluminum oxide slag.

THERMIT WELDING: A group of welding processes in which fusion is produced by heating with superheated liquid metal and slag resulting from a chemical reaction between a metal oxide and aluminum, with or without the application of pressure. Filler

metal, when used, is obtained from the liquid metal.

THROAT DEPTH: In a resistance-welding machine, the distance from the centerline of the electrodes or platens to the nearest point of interference for flatwork or sheets. In a seam-welding machine with a universal head, the throat depth is measured with the machine arranged for transverse welding.

THROAT OF FILLET WELD:

Theoretical—The distance from the beginning of the root of the joint perpendicular to the hypotenuse of the largest right triangle that can be inscribed within the fillet-weld cross section.

Actual—The shortest distance from the root of a fillet weld to its face.

TOE CRACK: A crack in the base metal occuring at the toe of the weld.

TOE OF THE WELD: The junction between the face of the weld and the base metal.

TORCH: See cutting torch or welding torch.

TORCH BRAZING: A brazing process in which fusion is produced by heating with a gas flame and by using a nonferrous filler metal having a melting point above 800 deg F, but below that of the base metal. The filler metal is distributed in the joint by capillary attraction.

TRANSVERSE SEAM WELDING: The making of a seam weld in a direction essentially at right angles to the throat depth of a seam welding machine.

U

UNDERBEAD CRACK: A crack in the heat affected zone not extending to the surface of the base metal.

UNDERCUTTING: An undesirable crater at the edge of the weld caused by poor weaving technique or excessive welding speed.

UPSET: A localized increase in volume in the region of a weld, resulting from the application of pressure.

UPSET WELDING: A resistance welding process in which fusion is produced simultaneously over the entire area of abutting surfaces, or progressively along a joint, by the heat obtained from resistance to the flow of electric current through the area of contact of those surfaces. Pressure is applied before heating is started and is maintained throughout the heating period.

UPSETTING FORCE: The force exerted at the welding surfaces in flash or upset welding.

V

VERTICAL POSITION: The position of welding in which the axis of the weld is approximately vertical. In pipe welding, the pipe is in a vertical position and the welding is done in a horizontal position.

W

WANDERING BLOCK SEQUENCE: A block sequence in which successive blocks are completed at random after several starting blocks have been completed.

WANDERING SEQUENCE: A longitudinal sequence in which the weld bead increments are deposited at random.

WAX PATTERN: Wax molded around the parts to be welded by a thermit welding process to the form desired for the completed weld.

WEAVE BEAD: A type of weld bead made with transverse oscillation.

WEAVING: A technique of depositing weld metal in which the electrode is oscillated. It is usually accomplished in a semicircular motion of the arc terminal to the right and left of the direction of deposition. Weaving serves to increase the width of the deposit, decreases overlap, and assists in slag formation.

WELD: A localized fusion of metals produced by heating to suitable temperatures. The application of pressure and/or the use of filler metal may or may not be used. The filler metal has a melting point approximately the same or below that of the base metals, but always above 800 deg F.

WELD BEAD: A weld deposit resulting from a pass.

WELD GAGE: A device designed for checking the shape and size of welds.

WELD METAL: That portion of a weld that has been melted during welding.

WELD SYMBOL: A picture used to indicate the desired type of weld.

WELDING SYMBOL: The assembled symbol consists of the following eight elements, or such of these as are necessary: reference line; arrow; basic weld symbols; dimension

and other data; supplementary symbols; finish symbols; tail; specification, process, or other references.

WELDABILITY: The capacity of a material to form a strong bond of adherence under pressure or when solidifying from a liquid.

WELDING LEADS:

a. Electrode lead—The electrical conductor between the source of the arc welding current and the electrode holder.

b. Work lead—The electrical conductor between the source of the arc welding current and the work.

WELDING PRESSURE: The pressure exerted during the welding operation on the parts being welded.

WELDING ROD: Filler metal in wire or rod form used in gas welding and brazing processes and in those arc welding processes in which the electrode does not provide the filler metal.

WELDING TECHNIQUE: The details of a manual, machine, or semiautomatic welding operation which, within the limitations of the prescribed joint welding procedure, are controlled by the welder or welding operator.

WELDING TIP: The tip of a gas torch especially adapted to welding.

WELDING TORCH: A device used in gas welding and torch brazing for mixing and controlling the flow of gases.

WELDING TRANSFORMER: A device for providing current of the desired voltage.

WELDMENT: An assembly whose component parts are formed by welding.

WORK LEAD: The electric conductor (cable) between the source of arc-welding current and the work.

X

X-RAY: A test method used to detect internal defects in a weld.

APPENDIX A

REFERENCES

1. Publication Indexes

The following indexes should be consulted for latest changes or revisions of references given in this appendix and for new publications relating to information contained in this manual.

Index of Administrative Publications	DA Pam 310–1
Index of Motion Pictures, Films Strips, Slides, and Phone-Recordings	DA Pam 108–1
Index of Technical Manuals, Supply Manuals, Supply Bulletins, Lubrication Orders, and Modification Work Orders	DA Pam 310–4
Index of Blank Forms	DA Pam 310–2
Index of Training Publications	DA Pam 310–3

2. Supply Manuals

The Department of the Army supply manuals pertaining to the materials contained in this manual are as follows:

Shop Set, Welding and Blacksmith	SC 3470–95–CL–A07
Shop Equipment, Welding	SC 3470–95–CL–A10
Torch Outfit, Cutting and Welding	SC 3433–95–CL–A03
Tool Kit, Welding	SC 3433–95–CL–A04

3. Technical Manuals and Technical Bulletins

a. The following DA publications contain information pertinent to this manual:

Painting Instructions, Field Use	TM 9–213
Spray Gun, Metallizing (Metallizing Co. of America "Turbo-Jet")	TM 9–3433–206–10
Shop Mathematics	TM 9–2820
The Army Equipment Record System and Procedure	TM 38–750
Army Aviation Maintenance Engineering Manual: Aircraft Structural Repair:	TM 9–55–405–4
General Repair of Quartermaster Items of General Equipment	TM 10–270
Operator, Organizational, GS and DS Maintenance Manual: Welding Machine, Arc, Generator, Power Take-Off Driven, 200 Amp, DC, Single Operator, Base Mounted (Valentine Model 26381) (3431–971–4924)	TM 5–3431–209–15
Operator, Organizational, GS and DS Maintenance Manual: Welding Machine, Arc, Generator, Gasoline Driven, 300 Amp DC, 60 Amp at 20 V Min, 375 Amp at 40 V Max, 115 V, DC, 3 KW, Skid Mounted, Winterized (Libby Model LEW–300) (3431–991–2961)	TM 5–3431–214–15

Organizational DS, GS, and Depot Maintenance Manual with Repair Parts and Special Tool Lists: Welding Machine, Arc; General and Inert Gas Shielded, Transformer-Rectifier Type AC and DC; 300 Ampere Rating at 60% Duty Cycle (Harnischfeger Model DAR-300HFSG) (FSN 3431-984-3401)	TM 5-3431-213-15
Operator, Organizational, DS, GS, and Depot Maintenance Manual (Including Repair Parts and Special Tool Lists): Welding Set, Arc, Inert Gas Shielded Consumable Metal Electrode for ¾ In. Wire, DC 115 V (Air Reduction Model 2351-0685) (FSN 3431-079-0488)	TM 5-3431-211-15
Toxicology of Ozone	TB MED 256
Arc Welding on Water-Borne Vessels	TB TC 11
Welding and Metal Cutting at NIKE Sites	TB END 53
Welding Terms and Definition Glossary	TB 34-91-167
Conversion of Welding Electrode Holder (3439-238-1638) for Supplemental Air-Arc Metal Cutting	TB 9-3439-203/1
Transport Wheeled Vehicles: Repair of Frames	TB 9-2300-247-40

4. Field Manuals, Army Regulations, and Special Regulators

The following Department of the Army publications contain information pertinent to this manual:

Military Symbols	FM 21-30 AFM 55-3
Military Training Management	FM 21-5
Techniques of Military Instructions	FM 21-6
Unsatisfactory Materiels Report	AR 700-46
Authorized Abbreviations	AR 320-50
Accident Reporting and Records	AR 385-40
Organization, Policy and Responsibility for Maintenance Operations	AR 750-5
Dictionary of United States Army Terms	SR 320-5

5. Other Publications

The following explanatory publications contain information pertinent to this materiel and associated equipment:

Color Code for Pipe Lines and Compress Gas Cylinder	MIL-STD-101A
Weld Joint Designs	MIL-STD-22A
Weld Joint Designs, Armored Tank Type	MIL-STD-21
Welding Terms and Definitions	MIL-STD-20
Welding Symbols	AWSA2.0.58
Welding, Resistance, Aluminum, Magnesium, Non-Hardening Steels or Alloys, and Titanium Alloys, Spot and Seam	MIL-W-6858C
Welding of Magnesium Alloys, Gas and Electric, Manual and Machine, Process for	MIL-W-18326A
Welding Rods and Wires, Magnesium Alloys	MIL-W-6944A
Welding, Aluminum Alloy Armor	MIL-W-45206
Welding, Flash, Carbon and Alloy Steel	MIL-W6873A
Welding, Metal-Arc, and Gas, Steels and corrosion Heat Resistance Alloys, Process for	MIL-W-8611A

Welding, Inert-Gas, Metal-Arc, Aluminum Alloys Readily Weldable for Structures, Excluding Armor	MIL–W–45205
Welding, Spot, Hardenable Steel	MIL–W–45223
Weldments, Aluminum and Aluminum Alloys	MIL–W–22248
Welding of Aluminum Alloys, Process for	MIL–W–8604
Welding of Armor, Metal-Arc, Manual, with Austenitic Electrodes for Aircraft	MIL–W–41B
Welding Homogeneous Armor, Metal-Arc Manual	MIL–W–46086
Welding, Repair of Readily Weldable Steel Castings, Other Than Armor, Metal-Arc, Manual	MIL–W–13773A
Welding Resistance, Spot and Projection, for Fabricating Assemblies of Low Carbon Steel	MIL–W–12332A
Welding, Resistance, Spot, Weldable Aluminum Alloys	MIL–W–45210A
Welding, Spot, Inert-Gas Shielded Arc	MIL–W–27664
Weldment, Steel, Carbon and Low Alloy; Yield Strength 30,000-60,000 PSI	MIL–W–21157
Moisture Stabilizer, Welding Electrode	MIL–M–45558
Electrodes, Welding, Mineral Covered, Low Hydrogen, Medium and High Tensile Steel as Welded or Stress Relieved Weld Application	MIL–E–18038A
Electrodes, Welding, Covered	MIL–E–22200/1 thru MIL–E–22200/7

b. The following commercial publications are available in technical libraries.

Welding Data Book	Welding Design & Febrication (Industrial Publishing Co.) Cleveland, Ohio 44115
The Welding Encyclopedia	Welding Engineers Publications Inc. Morton Grove, Illinois 60053

APPENDIX B

PROCEDURE GUIDES FOR WELDING

Table I. Guide for Oxy-Acetylene Welding

Base metal or alloy	Welding process (see note 1)	Flame adjustment	Welding rod	Flux required	Preheating required
IRON					
1. Wrought iron	F.W	Neutral	Low-carbon or high strength steel	No	No.
	B.W	Sl. oxidizing	Bronze	Brazing	No.
2. Low-carbon iron	F.W.	Neutral	Low-carbon	No	No.
	B.W.	Sl. oxidizing	Bronze	Brazing	No.
CARBON STEELS					
1. Low-carbon (Up to 0.25 percent C)	F.W.	Neutral	Low-carbon	No	No.
	B.W.	Sl. oxidizing	Bronze	Brazing	No.
2. Medium-carbon (0.25 percent to 0.45 percent C).	F.W.	Neutral to Sl. carburizing.	Low-carbon or high strength steel	No	300 to 500 F.
	B.W.	Sl. oxidizing	Bronze	Brazing	200 to 400 F.
3. High-carbon (exceeding 0.45 percent C).	F.W.	Carburizing	High-carbon	No	500 to 800 F.
	B.W.	Sl. oxidizing	Bronze	Brazing	300 to 500 F.
4. Tool steel (exceeding 0.60 percent C)	F.W.	Carburizing	Drill rod	Some C.I. flux	Up to 1,000 F.
	B.W.	Sl. oxidizing	Bronze	Brazing	500 to 600 F.
CAST STEELS					
1. Plain carbon (Up to 0.25 percent C)	F.W.	Neutral	Low-carbon	No	200 F.
	B.W.	Sl. oxidizing	Bronze	Brazing	200 F.
2. High Manganese (12 percent Mn)	F.W.	Sl. carburizing	Nickel mang. steel	Wrap rod with al. wire.	No.
	B.W.	Sl. oxidizing	Bronze	Brazing	No.
3. Other alloys	F.W.	Neutral to Sl. carburizing.	Same as base metal	No	In some cases.
	B.W.	Sl. oxidizing	Bronze	Brazing	In some cases.
CAST IRONS					
1. Gray cast iron	F.W.	Neutral	Cast iron	Cast iron flux	700 to 800 F.
	B.W.	Sl. oxidizing	Bronze	Brazing	Locally to 500 F.
2. Malleable iron	F.W. (see note 2).	Neutral	White cast iron	Cast iron flux	700 to 800 F.
	B.W. (see note 3).	Sl. oxidizing	Bronze	Brazing	Locally to 500 F.

3. Alloy cast irons	F.W. B.W.	Neutral Sl. oxidizing	Same as base Metal, or cast iron Bronze	Cast iron flux Brazing	500 to 1,000 F. Locally to 500 F.
LOW-ALLOY HIGH TENSILE STEELS					
(General)	F.W.	Neutral to sl. carburizing.	Same as base metal, or high strength steel	No	Yes.
1. Nickel alloy steel (3-3½ percent Ni) (Up to 0.25 percent C).	F.W.	Neutral to sl. carburizing.	Same as base metal, or high strength steel	No	No preheating Slow cool.
(More than 0.25 percent C)	F.W.	Neutral to sl. carburizing.	Same as base metal, or high strength steel	No	300 to 600 F. Slow cool.
2. Nickel-copper alloy steels	F.W.	Neutral to sl. carburizing.	Same as base metal, or high strength steel	No	250 to 300 F.
3. Manganese-molybdenum alloy steels	F.W.	Neutral to sl. carburizing.	Carbon molybdenum or high strength rod	No	250 to 300 F.
4. Carbon-molybdenum alloy steels (0.10 percent to 0.20 percent C)	F.W.	Neutral to sl. carburizing.	Carbon molybdenum or high strength rod	No	300 to 400 F.
(0.20 percent to 0.30 percent C)	F.W.	Neutral to sl. carburizing.	Carbon molybdenum or high strength rod	No	400 to 500 F. Slow cool.
5. Nickel-chromium alloy steels (Up to 0.20 percent C)	F.W.	Neutral to sl. carburizing.	Same as base metal, or high strength rod	No	200 to 300 F. Slow cool.
(0.20 percent to 0.55 percent C)	F.W.	Neutral to sl. carburizing.	Same as base metal, or high strength rod	No	600 to 800 F. Slow cool.
(High alloy content)	F.W.	Neutral to sl. carburizing.	Same as base metal, or high strength rod	No	900 to 1,100 F. Slow cool.
6. Chrome-molybdenum alloy steels	F.W.	Neutral to sl. carburizing.	Same as base metal, or high strength rod	No	300 to 800 F. Slow cool.
7. Chromium alloy steels	F.W.	Neutral to sl. carburizing.	Same as base metal, or high strength rod	No	300 to 800 F.
8. Chromium-vanadium alloy steels	F.W.	Neutral to sl. carburizing.	Same as base metal, or high strength rod	No	200 to 800 F.
9. Manganese alloy steels (1.6 percent-1.9 percent Mn).	F.W.	Neutral to sl. carburizing.	Same as base metal, or high strength rod	No	300 to 800 F.
STAINLESS STEELS					
1. Chromium alloys (12 percent—28 percent Cr) (Stainless irons).	F.W.	Neutral	Same as base metal, or (18–8) stainless	Stainless	No.
2. Chromium nickel alloys	F.W.	Neutral to sl. carburizing.	(18–8) stainless steels	Stainless	No.

Table I. Guide for Oxy-Acetylene Welding—Continued

Base metal or alloy	Welding process (see note 1)	Flame adjustment	Welding rod	Flux required	Preheating required
COPPER AND COPPER ALLOYS					
1. Deoxidized copper	F.W.	Neutral	Deoxidized copper	No	500 to 800 F.
	B.W.	Sl. oxidizing	Bronze	Brazing	400 to 600 F.
2. Commercial bronze and low brass	F.W.	Oxidizing	Same as base metal	Brazing	200 to 300 F.
	B.W.	Sl. oxidizing	Bronze	Brazing	200 to 300 F.
3. Spring, admiralty, and yellow brass	F.W.	Oxidizing	Same as base metal, or bronze	Brazing	200 to 300 F.
4. Muntz metal, Tobin bronze, naval brass, manganese bronze.	F.W.	Oxidizing	Bronze	Brazing	200 to 300 F.
5. Nickel silver	F.W.	Neutral	Nickel silver	Brazing	200 to 300 F.
6. Phosphor bronze	F.W.	Neutral	Bronze	Brazing	300 to 500 F.
	B.W.	Neutral or sl. oxidizing.	Bronze	Brazing	200 to 300 F.
7. Aluminum bronze	F.W.	Sl. carburizing	Aluminum bronze	Brazing	200 to 300 F.
8. Beryllium copper	Oxy-acetylene welding or brazing not recommended; use silver solder and flux.				
ALUMINUM AND ALUMINUM ALLOYS					
1. Pure aluminum (2S)	F.W.	Neutral	Pure aluminum	Aluminum	500 to 800 F.
2. Aluminum alloys (General)	F.W.	Neutral	Same as base metal, or 95 percent aluminum, 5 percent silicon rod.	Aluminum	500 to 800 F.
3. Aluminum-manganese alloy (3S)	F.W.	Neutral	Pure aluminum	Aluminum	500 to 800 F.
4. Aluminum - magnesium - chromium alloy (52S).	F.W.	Neutral	95 percent aluminum-5 percent silicon rod	Aluminum	500 to 800 F.
5. Aluminum - magnesium manganese alloy (4S).	F.W.	Neutral	95 percent aluminum-5 percent silicon rod	Aluminum	500 to 800 F.
6. Aluminum - silicon - magnesium alloy (51S) (53S).	F.W. (see note 4).	Neutral	95 percent aluminum-5 percent silicon rod	Aluminum	Up to 400 F.
7. Aluminum - copper - magnesium - manganese alloy (duraluminum) (17S) (24S).	Welding not recommended.				
8. Aluminum clad	Welding not recommended.				
NICKEL AND NICKEL ALLOYS					
1. Nickel	F.W.	Carburizing	Nickel	No	200 to 300 F.
	B.W.	Sl. oxidizing	Bronze	Brazing	200 to 300 F.
2. Monel (67 percent Ni–29 percent Cu)	F.W.	Carburizing	Monel	Brazing	200 to 300 F.
	B.W.	Sl. oxidizing	Bronze	Brazing	200 to 300 F.
3. Inconel (79 percent Ni–13 percent Cr–6 percent Fe).	F.W.	Carburizing	Inconel	Brazing	200 to 300 F.
	B.W.	Sl. oxidizing	Bronze	Brazing	200 to 300 F.

LEAD	F.W.	Neutral to sl. carburizing.	Lead	Soldering acid	No.
MAGNESIUM ALLOYS (see note 5)	F.W.	Sl. carburizing	Same as base metal	Special flux	500 to 600 F.
WHITE METAL	F.W.	Carburizing	White metal	No	No.

Notes.

In general, in welding low-alloy high-tensile steels, it is recommended that the filler metal used should be of the same composition as the base metal to obtain good corrosion resistance at the welded joint.

In welding low-alloy high-tensile steels in the heat-treated condition, it is recommended that the filler metal used should be of the austenitic type, such as the 18-percent chromium-8-percent nickel stainless steel welding rod.

In all cases where the low-alloy high-tensile steels are to be heat-treated after welding, the filler metals used should be of the same composition as the base metal or other suitable high-strength welding rod.

1. In the welding process column, F. W. indicates fusion welding and B. W. indicates braze welding. In flame adjustment column, Sl. indicates "slightly."
2. Welded as white cast iron only and should be followed by treatment for malleability. Fusion welding is not recommended for malleable iron.
3. Preferred method.
4. Heat-treat (15S) and (53S) after welding. Properties of (17S) and (24S) alloys cannot be restored by heat treatment after welding.
5. Welding is not recommended on some magnesium alloys because of their porous nature, and such welds are made as emergency repairs until a replacement casting can be obtained.

Table II. Guide for Electric Arc Welding

Base metal or alloy	Welding process (see note 1)	Polarity	Welding electrode: Material	Welding electrode: Type	Preheating required
IRON					
1. Wrought iron	M.A.W.	Reverse	Mild steel	Shielded arc (see note 2).	No.
	C.A.W.	Straight	Mild steel	Use a flux	No.
	M.A.B.	Reverse	Bronze	Shielded arc	No.
2. Low-carbon iron	M.A.W.	Reverse	Mild steel	Shielded arc	No.
CARBON STEELS					
1. Low-carbon (Up to 0.30 percent C)	M.A.W.	Straight	Mild steel	Bare or light coated.	Up to 300 F.
	M.A.W.	Reverse	Mild steel	Shielded arc	Up to 300 F.
	C.A.W.	Straight	Mild steel	Use a flux	Up to 300 F.
	M.A.B.	Reverse	Bronze	Shielded arc	Up to 300 F.
2. Medium-carbon (0.30 percent to 0.50 percent C).	M.A.W.	Reverse	25–20 or modified 18–8 stainless steel	Shielded arc	
	M.A.W.	Reverse	Mild steel or high strength	Shielded arc	300 to 500 F.
3. High-carbon (0.50 percent to 0.90 percent C).	M.A.W. (See note 3).	Reverse	25–20 or modified 18–8 stainless steel	Shielded arc	
	M.A.W.	Reverse	Mild steel or high strength	Shielded arc	500 to 800 F.
4. Tool steel (0.80 percent to 1.50 percent C).	M.A.W.	Reverse	25–20 or modified 18–8 stainless steel	Shielded arc	Up to 800 F.
	M.A.W.	Reverse	Mild steel or high strength	Shielded arc	Up to 1,000 F.
CAST STEELS					
1. Plain carbon (Up to 0.25 percent C)	M.A.W.	Reverse	Mild steel	Shielded arc	200 F.
	M.A.B.	Reverse	Bronze	Shielded arc	200 F.

Table II. Guide for Electric Arc Welding—Continued

Base metal or alloy	Welding process (see note 1)	Polarity	Welding electrode: Material	Welding electrode: Type	Preheating required
IRON—Continued					
2. High manganese (12 percent Mn)	M.A.W.	Reverse	Weld with 25–20 stainless steel and surface with nickel manganese.	Shielded arc	No.
	To build up sections.	Reverse	Nickel manganese	Shielded arc	No preheating Quench and peen-weld.
3. Other alloys	M.A.W.	Reverse	Mild steel	Shielded arc	In some cases.
CAST IRONS					
1. Gray cast iron (Machinable welds)	M.A.W.	Reverse	Monel, 18–8 stainless steel, or mild steel	Shielded arc	700 to 800 F. or no preheating but peen-weld.
(Nonmachinable welds)	M.A.W.	Straight	Cast iron	Shielded arc	700 to 800 F.
	M.A.B.	Reverse	Bronze	Shielded arc	Up to 500 F.
	C.A.B.	Straight	Bronze	Shielded arc	Up to 500 F.
2. Mallable iron (Machinable welds)	M.A.W.	Reverse	Monel, 18–8 stainless steel, or mild steel	Shielded arc	700 to 800 F. Anneal weld.
(Nonmachinable welds)	M.A.W.	Straight	Cast iron	Shielded arc	700 to 800 F.
	M.A.B.	Reverse	Bronze	Shielded arc	Up to 500 F.
	C.A.B.	Straight	Bronze	Shielded arc	Up to 500 F.
3. Alloy cast irons			(Same as gray cast iron.)		
LOW-ALLOY HIGH-TENSILE STEELS					
General	M.A.W. (See note 4).	Reverse	Same as base metal; or high strength or mild steel, or 25–20 stainless steel.	Shielded arc	Yes.
1. Nickel alloy steel (3—3½ percent Ni) (Up to 0.25 percent C)	M.A.W.	Reverse	Nickel alloy or 25–20 stainless steel	Shielded arc	No preheating Slow cool.
(More than 0.25 percent C).	M.A.W.	Reverse	Nickel alloy or 25–20 stainless steel	Shielded arc	300 to 600 F.
2. Nickel copper alloy steels	M.A.W.	Reverse	Nickel alloy or 25–20 stainless steel	Shielded arc	250 to 300 F.
3. Manganese molybdenum alloy steels	M.A.W.	Reverse	Carbon molybdenum or special electrode	Shielded arc	250 to 300 F.
4. Carbon molybdenum alloy steels (0.10 percent to 0.20 percent C).	M.A.W.	Straight or reverse.	Carbon molybdenum	Shielded arc	300 to 400 F.
(0.20 percent to 0.30 percent C)	M.A.W.	Straight or reverse.	Carbon molybdenum	Shielded arc	400 to 500 F. Slow cool.
5. Nickel chromium alloy steels (1 percent—3½ percent Ni) (Up to 0.20 percent C)	M.A.W.	Reverse	Same as base metal, or 25–20 stainless steel.	Shielded arc	200 to 300 F. Slow cool.
(0.20 percent to 0.55 percent C)	M.A.W.	Reverse	Same as base metal, or 25–20 stainless steel.	Shielded arc	600 to 800 F.
(High alloy content)	M.A.W.	Reverse	Same as base metal, or 25–20 stainless steel.	Shielded arc	900 to 1,000 F. Slow cool.

6. Chrome-molybdenum alloy steels	M.A.W.	Straight or reverse.	Chrome molybdenum or carbon molybdenum.	Shielded arc	300 to 800 F. Slow cool.
	C.A.W.	Straight	Same as base metal	Use a flux	300 to 800 F. Slow cool.
7. Chromium alloy steels	M.A.W.	Reverse	Same as base metal, or 25–20 or 18–8 stainless. steel.	Shielded arc	300 to 800 F.
8. Chromium vanadium alloy steels	M.A.W.	Reverse	Chrome molybdenum or carbon molybdenum.	Shielded arc	200 to 800 F.
9. Manganese alloy steels (1.6 percent—1.9 percent Mn).	M.A.W.	Reverse	Carbon molybdenum or mild steel	Shielded arc	300 to 800 F.
STAINLESS STEELS					
1. Chromium alloys (12 percent–28 percent Cr) (Stainless irons).	M.A.W.	Reverse	25–20 or columbium-bearing 18–8 stainless steel.	Shielded arc	No.
2. Chromium-nickel alloys	M.A.W.	Reverse	25–20 or columbium-bearing 18–8 stainless steel.	Shielded arc	No.
COPPER AND COPPER ALLOYS					
1. Deoxidized copper	M.A.W.	Reverse	Deoxidized copper, phosphor bronze, or silicon copper.	Shielded arc	500 to 800 F.
	C.A.W.	Straight	Deoxidized copper, phosphor bronze, or silicon copper.	Shielded arc	500 to 800 F.
2. Commercial bronze and low brass	M.A.W.	Reverse	Phosphor bronze or silicon copper	Shielded arc	200 to 300 F.
	C.A.W.	Straight	Phosphor bronze or silicon copper	Use a flux	200 to 300 F.
3. Spring, admiralty, and yellow brass	C.A.W.	Straight	Phosphor bronze	Use a flux	200 to 300 F.
4. Muntz metal, Tobin bronze, naval bronze, manganese bronze.	C.A.W.	Straight	Phosphor bronze	Use a flux	200 to 300 F.
5. Nickel silver	M.A.W.	Reverse	High nickel alloy, phosphor bronze, or silicon copper.	Shielded arc	300 to 500 F.
	C.A.B.	Straight		Use a flux	300 to 500 F.
6. Phosphor bronze	M.A.W.	Reverse	Phosphor bronze	Shielded arc	200 to 300 F.
	C.A.W.	Straight	Phosphor bronze	Use a flux	200 to 300 F.
7. Aluminum bronze	M.A.W.	Reverse	Aluminum bronze or phosphor bronze	Shielded arc	200 to 300 F.
	C.A.W.	Straight	Aluminum bronze or phosphor bronze	Use of flux (Optional).	200 to 300 F.
8. Beryllium copper	C.A.W.	Straight	Beryllium copper	Use of flux (Optional).	500 to 800 F.
ALUMINUM AND ALUMINUM ALLOYS					
1. Pure aluminum (2S)	M.A.W.	Reverse	Pure aluminum or 95 percent aluminum 5 percent silicon electrode.	Shielded arc	500 to 800 F.
	C.A.W.	Straight	Pure aluminum or 95 percent aluminum 5 percent silicon electrode.	Flux-coated	500 to 800 F.
2. Aluminum alloys (General)	M.A.W.	Reverse	95 percent aluminum-5 percent silicon electrode.	Shielded arc	500 to 800 F.
	C.A.W.	Straight	95 percent aluminum-5 percent silicon electrode.	Flux-coated	500 to 800 F.

Table II. Guide for Electric Arc Welding—Continued

Base metal or alloy	Welding process (see note 1)	Polarity	Welding electrode: Material	Welding electrode: Type	Preheating required
ALUMINUM AND ALUMINUM ALLOYS—Continued					
3. Aluminum manganese alloy (3S)	M.A.W.	Reverse	95 percent aluminum-5 percent silicon electrode.	Shielded arc	500 to 800 F.
	C.A.W.	Straight	95 percent aluminum-5 percent silicon electrode.	Flux-coated	500 to 800 F.
4. Aluminum-magnesium-chromium alloy (52S).	M.A.W.	Reverse	95 percent aluminum-5 percent silicon electrode.	Shielded arc	500 to 800 F.
	C.A.W.	Straight	95 percent aluminum-5 percent silicon electrode.	Flux-coated	500 to 800 F.
5. Aluminum magnesium manganese alloy (4S).	M.A.W.	Reverse	95 percent aluminum-5 percent silicon electrode.	Shielded arc	500 to 800 F.
	C.A.W.	Straight	95 percent aluminum-5 percent silicon electrode.	Flux-coated	500 to 800 F.
6. Aluminum-silicon-magnesium alloys (51S) (53S).	M.A.W.	Reverse	95 percent aluminum-5 percent silicon electrode.	Shielded arc	Up to 400 F.
7. Aluminum - copper - magnesium - manganese alloys Duraluminum (17S) (24S).	C.A.W.	Straight	95 percent aluminum-5 percent silicon electrode.	Flux-coated	Up to 400 F.
8. Aluminum clad	Arc welding not recommended.				
NICKEL AND NICKEL ALLOYS					
1. Nickel	Arc welding not recommended.				
	M.A.W.	Reverse	Nickel	Shielded arc	200 to 300 F.
	C.A.W.	Straight	Nickel	Lightly flux-coated.	200 to 300 F.
2. Monel (67 percent Ni–29 percent Cu)	M.A.W.	Reverse	Monel	Shielded arc	200 to 300 F.
	C.A.W.	Straight	Monel	Lightly flux-coated.	200 to 300 F.
3. Inconel (79 percent Ni–13 percent CR–6 percent Fe).	M.A.W.	Reverse	Same as base metal	Shielded arc	200 to 300 F.
LEAD	Lead cannot be arc-welded.				
MAGNESIUM ALLOYS	M.A.W.	Reverse	Tungsten	Shielded arc	
	M.A.W.	Reverse	Magnesium	Shielded arc	

Notes.

1. In the welding process column, M.A.W. indicates metal-arc welding, C.A.W. indicates carbon-arc welding, M.A.B. indicates metal-arc brazing, and C.A.B. indicates carbon-arc brazing.
2. Shielded-arc electrodes are heavy-coated and usually require reverse polarity; however, manufacturer's recommendations specify the preferred polarity for special electrodes, which may differ from the polarity recommended above in some cases.
3. Stress-relieve by heating 1,200° to 1,450° F., for 1 hour per inch of thickness and cool slowly.
4. A large number and variety of low-alloy high-tensile steels are used in ordnance construction. In arc welding these steels, certain special precautions are required, such as preheating before welding, use of special electrodes, and a postheating treatment. In general, where good corrosion resistance is required or when the welded joint is to be heat-treated after welding, electrodes having the same composition or properties as the base metal are used. Where these steels are in the heat-treated condition, it is recommended that the filler metal used should be of the austenitic type, such as 25-percent chromium—12 percent nickel, 25-percent chromium—20-percent nickel or 18 percent chromium

—8-percent nickel stainless steel, in order to obtain good weld metal properties. Some of these stainless steel electrodes have columbium or other alloying elements added to retain their properties after welding. An example of this is the so-called modified 18–8 stainless steel electrode, which contains small percentages of either manganese or molybdenum. This electrode may be used in place of the 25–20 type of electrode in any of the welding processes for which 25–20 electrodes are specified. Usually no preheating is required in welding with these electrodes.

Table III. Guide for Welding Automotive Equipment

(See explanation of symbols at end of table)

The automotive part	Usual metal composition											Recommended welding method						
	Gray Cast Iron	Malleable Iron	Cast Steel	Steel Forgings	To 0.40 Carbon Steel	Over 0.40 Carbon Steel	Alloy Steels	Aluminum	Brass, Copper or Bronze	Miscellaneous	Babbitt	Braze—Welding	Welding With Rod of Similar Composition	No. 1 H.T.	Soldering	Heating	Haynes Stellite	Welding Not Recommended
DIVISION 1—CYLINDERS																		
Group 1—Cylinder Parts																		
Cylinder block	x	-----	-----	-----	-----	-----	-----	-----	-----	-----	-----	x						
Cylinder head	x	-----	-----	-----	-----	-----	-----	-----	-----	-----	-----	x						
Water jacket covers	x	-----	-----	-----	-----	-----	-----	-----	-----	-----	-----	x						
Valve spring cover	-----	-----	-----	-----	x	-----	-----	-----	-----	-----	-----	x						
Valve stem guide	n	-----	-----	-----	n	-----	-----	-----	-----	p	-----	p	-----	-----	-----	-----	-----	n
Group 2—Crank Case Parts																		
Crank case (various types)	1	-----	-----	-----	-----	-----	-----	2	-----	-----	-----	1	2					
Oil pan	-----	-----	-----	-----	x	-----	-----	-----	-----	-----	-----	x						
Breather	-----	-----	-----	-----	x	-----	-----	-----	-----	-----	-----	x						
Crankshaft bearings	-----	-----	-----	-----	-----	-----	-----	-----	1	-----	2	-----	-----	-----	2			
Crankshaft bearing cap	-----	-----	x	-----	x	-----	-----	-----	-----	-----	-----	x						
Crankshaft bushing supports	-----	-----	x	-----	x	-----	-----	-----	-----	-----	-----	x						
Handhole cover	-----	-----	-----	-----	x	-----	-----	-----	-----	-----	-----	x						
Timing gear cover	-----	-----	-----	-----	x	-----	-----	-----	-----	-----	-----	x						
Flywheel housing	1	-----	-----	-----	-----	-----	-----	2	-----	-----	-----	1	2					
Generator bracket	x	-----	-----	-----	-----	-----	-----	-----	-----	-----	-----	x						
Group 3—Crankshaft Parts																		
Crankshaft	-----	-----	-----	n	-----	-----	-----	-----	-----	-----	-----	-----	-----	-----	-----	-----	-----	n
Flywheel	x	-----	x	x	-----	-----	-----	-----	-----	-----	-----	x						
Crankshaft timing gear	-----	-----	-----	-----	n	n	-----	-----	-----	-----	-----	n	-----	-----	-----	-----	-----	n
Flywheel starter gear	-----	-----	-----	-----	x	x	x	-----	-----	-----	-----	x						
Crankshaft starter sprocket	-----	-----	-----	-----	x	-----	x	-----	-----	-----	-----	x						
Crankshaft starting jaw (or pin).	-----	-----	-----	-----	x	-----	-----	-----	-----	-----	-----	x						
Group 4—Starting Crank Parts																		
Starting crank jaw	-----	-----	-----	-----	x	-----	-----	-----	-----	-----	-----	x						
Starting crankshaft	-----	-----	-----	-----	x	-----	-----	-----	-----	-----	-----	x						
Starting crankshaft spring	-----	-----	-----	-----	-----	n	n	-----	-----	-----	-----	-----	-----	-----	-----	-----	-----	n
Starting crank handle	-----	-----	-----	-----	x	-----	-----	-----	-----	-----	-----	x						

Table III. Guide for Welding Automotive Equipment—Continued

The automotive part	Usual metal composition											Recommended welding method						
	Gray Cast Iron	Malleable Iron	Cast Steel	Steel Forgings	To 0.40 Carbon Steel	Over 0.40 Carbon Steel	Alloy Steels	Aluminum	Brass, Copper or Bronze	Miscellaneous	Babbitt	Braze—Welding	Welding With Rod of Similar Composition	No. 1 H.T.	Soldering	Heating	Haynes Stellite	Welding Not Recommended
DIVISION I—CYLINDERS—Continued																		
Group 5—Connecting Rods																		
Connecting rod				n			n	n										n
Connecting rod cap				n				n										n
Connecting rod bushing									1		2	1				2		
Connecting rod dipper					1			2				1	2					
Piston pin bushing						n			n									n
Group 6—Pistons and parts																		n
DIVISION II—VALVES																		
Group 1—Camshaft Parts																		
Camshaft					n		n					n						n
Eccentric shaft				n														n
Camshaft timing gear					x		x					x						
Camshaft idler gear					x		x					x						
Camshaft oil pump gear					x		x					x						
Camshaft ignition distributor gear.					x		x					x						
Camshaft time drive gear					x		x					x						
Oil pump eccentric (or cam)				n	n							n						n
Group 2—Valves																		
Poppet valve	n						n											n
Inlet valve	n						n											n
Exhaust valve	n						n											n
Valve spring						n	n											n
Valve spring retainer					x							x						
Valve lifter					x		x					x						
Valve lifter guide	n				n													n
Valve rocker					x		x					x						
Valve push rod					x	x						x					x	
DIVISION III—COOLING SYSTEM																		
Group 1—Fan Parts																		
Fan bracket	x		x									x						
Fan spindle					x							x						

Fan hub					x							x								
Fan hub bushing (or bearing)	x								x			x								
Fan blades					x							x								
Fan pulley					x							x								
Fan driving pulley	x		x		x							x								
Group 2—Radiator Parts																				
Radiator core					x				x						x					
Radiator core header sheets					x				x						x					
Radiator upper tank					x				x						x					
Radiator filler neck					x				x			x								
Radiator filler neck, sleeve					x							x	4							
Radiator filler cap					1		2		3	d, n		1, 2, 3								n
Radiator tie rod fitting					x							x								
Radiator baffle					x				x						x					
Radiator inlet fitting	x								x			x								
Radiator lower tank					x				x						x					
Radiator outlet fitting	x											x								
Radiator drain flange					x				x			x								
Radiator anchor plate					x							x								
Radiator overflow tube					x				x						x					
Radiator side bolting member					x							x								
Radiator shell anchorage clips					x							x								
Radiator shell					1		2		3			1	2, 3							
Radiator supports					x							x								
Radiator support reinforcement					x							x								
Radiator hinge rod fitting					x							x								
Radiator brace rod fitting					x							x								
Radiator hood ledge liner strip					x							x								
Radiator starting crank hole cover.					1		2					1	2							
Group 3—Water Pump Parts																				
Water pump impeller	x						x		x			x								
Water pump body	1									d, n		1								n
Water pump cover					x							x								
Water pump shaft					x		x					x							x	
Water pump gland					x							x								
Water pump shaft gear					x		x					x								
Water pump shaft bushing	x								x			x								
Group 4—Pipes																				
Engine water outlet	x											x								
Engine water inlet	x											x								
Radiator water fitting					x							x								
Water pump outlet pipe	x											x								

Table III. Guide for Welding Automotive Equipment—Continued

The automotive part	Usual metal composition											Recommended welding method						
	Gray Cast Iron	Malleable Iron	Cast Steel	Steel Forgings	To 0.40 Carbon Steel	Over 0.40 Carbon Steel	Alloy Steels	Aluminum	Brass, Copper or Bronze	Miscellaneous	Babbitt	Braze—Welding	Welding With Rod of Similar Composition	No. 1 H.T.	Soldering	Heating	Haynes Stellite	Welding Not Recommended
DIVISION IV—FUEL SYSTEM																		
Group 1—Carburetor and Inlet Pipe																		
Carburetor	1		2						3	d, n		1, 2, 3						n
Inlet manifold	x											x						
Inlet pipe									x			x						
Group 2—Carburetor Control Parts																		
Accelerator pedal					1			2				1	2					
Accelerator pedal bracket	x		x									x						
Accelerator pedal rod					x							x						
Carburetor mixture hand regulator.					x							x						
Carburetor choke					x							x						
Group 3—Carburetor Air Heater Parts																		
Carburetor air heater	x				x							x						
Carburetor hot air pipe	x				x							x						
Group 4—Fuel Tank																		
Fuel tank					x							x						
Fuel tank outlets					x							x						
Group 5—Fuel Pipes and Feed Systems																		
Fuel pipes									x			x						
Fuel pressure pump					x							x						
Fuel hand pump					x							x						
Fuel pressure pipes									x			x						
DIVISION V—EXHAUST SYSTEM																		
Group 1—Exhaust Manifold																		
Exhaust manifold	x												x					
Group 2—Exhaust Pipe and Muffler																		
Muffler					x							x						
Exhaust pipe					x							x						
Muffler outlet pipe					x							x						

DIVISION VI—LUBRICATION SYSTEM																					
Group 1—Oil Pan or Reservoir																					
Oil pan					x							x									
Oil filler strainer									x						x						
Oil filler cap					x							x									
Group 2—Oil Pump Parts																					
Oil pump body	x											x									
Oil pump plunger	x				x				x			x									
Oil pump plunger spring						n	n					n									n
Oil pump valves					x																
Oil pump shaft					x	x	x					x									
Oil pump shaft gears					n		n					n									n
Oil pump following gear					x							n									n
Oil pump cover					n		n					x									
Group 3—Oil Pipes, Strainers, Gages																					
Oil pipes									x			x									
Circulating oil strainer									x						x						
Oil strainer cap					x							x									
Oil level gage					x				x			x									
DIVISION VII—IGNITION SYSTEM																					
Group 1—Spark Plugs, Cables																					
Spark plug cables									x						x						
Coil high-tension cable									x						x						
Low-tension cables									x						x						
Group 2—Battery Ignition Equipment Parts																					
Timer-disrtibutor shaft					1		n					1, n									n
Timer-distributor shaft gear					1		n					1, n									n
Ignition drive shaft					x		x					x									
Ignition drive shaft gear					x		x					x									
Manual advance arm					x							x									
Automatic advance element					x							x									
Ignition unit, magneto-base mounting.	x		x		x							x									
DIVISION VIII—STARTING AND GEN. EQUIP.																					
Group 1—Generator Parts																					
Generator driving gear or sprocket.									x			x									
Generator shaft					x							x									
Generator coupling					x							x									

Table III. Guide for Welding Automotive Equipment—Continued

The automotive part	Usual metal composition											Recommended welding method						
	Gray Cast Iron	Malleable Iron	Cast Steel	Steel Forgings	To 0.40 Carbon Steel	Over 0.40 Carbon Steel	Alloy Steels	Aluminum	Brass, Copper or Bronze	Miscellaneous	Babbitt	Braze—Welding	Welding With Rod of Similar Composition	No. 1 H.T.	Soldering	Heating	Haynes Stellite	Welding Not Recommended
DIVISION VIII—STARTING AND GEN. EQUIP.—Continued																		
Group 2—Starting Motor Parts																		
Starting motor pinions						n	n					n						n
Starting motor gear						n	n					n						n
Starting motor gear shaft					n		n					n						n
Group 3—Starter Generator (*See* VIII—1, 2)																		
Group 4—Ignition Generator (*See* VII—2, VIII—1)																		
Group 5—Ignition Starter Generator (*See* VII—2, VIII—1, 2)																		
Group 6—Storage Battery Parts																		
Terminal post										1			x					
Plates										1, n								n
Post straps										1			x					
Battery holddown					x							x						
Handles					x							x						
Terminals										1			x					
Through bolt					x							x						
DIVISION IX—MISC. ELECTRICAL EQUIP.																		
Group 1—Lamps and wiring																		
Head lamp housing					1		2		3			1, 3	2					
Head lamp housing flange					x				x			x						
Head lamp door					1		2		3			1, 3	2					
Head lamp reflector									n									n
Auxiliary light parts are similar to head lamp parts.																		
Head lamp support tie rod					x							x						
Taillight support					x							x						

Group 2—Switches and Instruments																					
Starting switch lever					x							x									
Switches and instruments									x							x					
Group 3—Horn																					
Horn projector					x							x									
DIVISION X—CLUTCH																					
Group 1—Clutching Parts																					
Clutch case (rotating member)	x											x									
Clutch housing	1		2					3				1, 2	3								
Clutch cover					1			2				1	2								
Clutch housing cover					x							x									
Clutch driving disk					n																n
Clutch pressure plates	x		x		x							x									
Clutch driver spider (or drum)					x							x									
Clutch facing spring							n	n													n
Clutch spring							n	n													n
Clutch shaft					x							x									
Clutch pilot bearing							n														n
Clutch driven plate	x		x									x								x	
Clutch driving plate					n																n
Clutch pressure levers		x	x	x	x							x									
Group 2—Releasing Parts																					
Clutch release sleeve	x				x							x								x	
Clutch release bearing housing					x							x									n
Clutch release bearing							n													x	
Clutch release yoke		x	x									x									n
Clutch release yoke shaft					1		n					1, n									n
Clutch pedal shaft					1		n					1, n									n
Clutch pedal adjusting link					x							x									
Clutch release yoke lever				x								x									
Clutch pedal		x		x								x									
Clutch brake					x				x			x									
DIVISION XI—TRANSMISSION																					
Group 1—Transmission Parts																					
Transmission case and cover	1							2				1	2								
Transmission gears						n	n					n									n
Transmission bearings and bearing parts.						n	n														n
Transmission shafts and counter shafts.					n		n					n									n
Transmission shaft pilot bushings.							n		1			1									n
Group 2—Shifting Mechanism Parts																					
Control housing	x											x									

Table III. Guide for Welding Automotive Equipment—Continued

The automotive part	Usual metal composition											Recommended welding method						
	Gray Cast Iron	Malleable Iron	Cast Steel	Steel Forgings	To 0.40 Carbon Steel	Over 0.40 Carbon Steel	Alloy Steels	Aluminum	Brass, Copper or Bronze	Miscellaneous	Babbitt	Braze—Welding	Welding With Rod of Similar Composition	No. 1 H.T.	Soldering	Heating	Haynes Stellite	Welding Not Recommended
DIVISION XI—TRANSMISSION—																		
Group 2—Shifting Mechanism Parts																		
Continued																		
Control shift frame		x		x								x						
Transmission shift forks		x		x	x		x					x					x	
Transmission shift rails					1		n					1, n						n
Transmission interlock rail				1	2		n					1, 2, n						n
Group 3—Control Parts																		
Control lever					x							x						
Control lever fulcrum ball					x	x	x					x					x	
Group 4—Propeller Shaft Parts																		
Propeller shaft					1		n					n		1				n
Propeller shaft universal joints				x	x		x					x						
Propeller shaft bearings and bearing parts.						n	n											n
Transmission shaft universal joint flange.				x	x							x						
Universal joint yoke		n	n	n								n						n
Universal joint center cross, ring or block.				n								n						n
Universal joint bearing bushing									x			x						
Universal joint pin						n	n											n
Universal joint casings			x		x							x						
Universal joint trunnion					n		n					n					n	n
Universal joint trunnion block					n		n					n						n
DIVISION XII—REAR AXLE																		
Group 1—Housing Parts.																		
Rear axle housing	x				x							x						
Bevel or worm gear housing	x		x		x							x						
Rear axle tubes					x		x					x						
Differential carrier	x		x	x	x							x						
Rear axle spring seat		x	x	x								x						
Axle brake shaft bracket			x	x	x							x						

Brake support			x	x	x							x							
Brake shield					x							x							
Group 2—Torque Arm and Radius Rod Parts																			
Radius rods					x									x					
Group 3—Drive Pinion Parts																			
Axle drive bevel pinion					n	n	n					n							n
Axle drive pinion shaft					n		n					n							n
Axle drive pinion bearings and bearing parts.						n	n												n
Axle drive pinion adjusting sleeves.				n	n														n
Axle drive pinion (or worm) carrier.	x	x	x		x							x							
Group 4—Differential Parts																			
Bevel drive pinion					n	n	n					n							n
Bevel drive gear					n		n					n							n
Differential case flange half			n				n					n							n
Differential case plain half			n				n					n							n
Differential bearing sleeve						n	n												n
Differential side gear					n		n					n							n
Differential spider pinion					n	n	n					n							n
Differential spider					n	n	n					n							n
Differential cross pin pinion					n	n	n					n							n
Differential cross pin						n	n					n							n
Differential side gear spacer					x							x							
Worm or worm gear					n	n	n		n			n							n
Group 5—Axle Shafts																			
Axle shaft					n		n					n							n
Axle shaft wheel flange		x	x		x							x							
DIVISION XIII—BRAKES																			
Group 1—Outer Brake Parts																			
Outer brake band					n		n												n
Outer brake band lever		x		x	x							x							
Outer brake lever shaft				1	2		n					1, 2							n
Outer brake shaft end levers				x	x							x							
Group 2—Inner Brake Parts																			
Inner brake shoe	x			x								x							
Inner brake toggle		x		x	x							x							
Inner brake toggle lever		x		x	x							x							
Inner brake toggle shaft					x							x							
Inner brake cam					1	2	n					1, 2, n							n

Table III. Guide for Welding Automotive Equipment—Continued

The automotive part	Usual metal composition											Recommended welding method						
	Gray Cast Iron	Malleable Iron	Cast Steel	Steel Forgings	To 0.40 Carbon Steel	Over 0.40 Carbon Steel	Alloy Steels	Aluminum	Brass, Copper or Bronze	Miscellaneous	Babbitt	Braze—Welding	Welding With Rod of Similar Composition	No. 1 H.T.	Soldering	Heating	Haynes Stellite	Welding Not Recommended
DIVISION XIII—BRAKES—																		
Group 2—Inner Brake Parts Continued																		
Inner brake camshaft	-----	-----	-----	-----	1	-----	n	-----	-----	-----	-----	1, n	-----	-----	-----	-----	-----	n
Inner brake camshaft lever	-----	-----	-----	x	x	-----	-----	-----	-----	-----	-----	x						
Group 3—Pedal (or Outer) Brake Control Parts																		
Pedal brake rod	-----	-----	-----	-----	x	-----	-----	-----	-----	-----	-----	x						
Pedal brake rod yoke	-----	-----	-----	-----	x	-----	-----	-----	-----	-----	-----	x						
Pedal brake intermediate shafts	-----	-----	-----	x	x	-----	-----	-----	-----	-----	-----	x						
Pedal brake equalizer levers	-----	-----	-----	x	x	-----	-----	-----	-----	-----	-----	x						
Pedal brake equalizer	-----	-----	-----	x	x	-----	-----	-----	-----	-----	-----	x						
Brake pedal	-----	-----	-----	x	x	-----	-----	-----	-----	-----	-----	x						
Brake pedal rod	-----	-----	-----	-----	x	-----	-----	-----	-----	-----	-----	x						
Brake pedal rod yokes	-----	-----	-----	x	x	-----	-----	-----	-----	-----	-----	x						
Brake pedal shaft	-----	-----	-----	-----	1	-----	n	-----	-----	-----	-----	1, n	-----	-----	-----	-----	-----	n
Group 4—Handbrake Parts (or Inner) Control																		
Handbrake rod	-----	-----	-----	-----	x	-----	-----	-----	-----	-----	-----	x						
Handbrake rod yoke	-----	-----	-----	x	x	-----	-----	-----	-----	-----	-----	x						
Handbrake intermediate shafts	-----	-----	-----	x	x	-----	-----	-----	-----	-----	-----	x						
Handbrake equalizer levers	-----	-----	-----	x	x	-----	-----	-----	-----	-----	-----	x						
Handbrake equalizer	-----	-----	-----	x	x	-----	-----	-----	-----	-----	-----	x						
Brake hand lever rod	-----	-----	-----	-----	x	-----	-----	-----	-----	-----	-----	x						
Brake hand lever rod yoke	-----	-----	-----	x	x	-----	-----	-----	-----	-----	-----	x						
Brake hand lever	-----	-----	-----	x	x	-----	-----	-----	-----	-----	-----	x						
DIVISION XIV—FRONT AXLE AND STEERING																		
Group 1—Axle Center Parts																		
Front axle center	-----	-----	-----	n	-----	-----	n	-----	-----	-----	-----	-----	-----	-----	-----	-----	-----	n
Front spring seats	-----	-----	-----	-----	-----	n	n	-----	-----	-----	-----	n	-----	-----	-----	-----	-----	n
Front axle bushing	-----	-----	-----	-----	-----	n	n	-----	1	-----	-----	1	-----	-----	-----	-----	-----	n
Wheel spindles	-----	-----	n	-----	-----	-----	-----	-----	-----	-----	-----	n	-----	-----	-----	-----	-----	n
Group 2—Steering Knuckles																		
Steering knuckles	-----	n	n	n	-----	n	n	-----	-----	-----	-----	-----	-----	-----	-----	-----	-----	n

Steering knuckle bushing	x								x			x							
Steering knuckle pivot					n		n												n
Steering knuckle thrust bearing						n	n												n
Steering knuckle arms		n		n	n		n												n
Steering knuckle gear rod arm				n	n		n												n
Group 3—Steering Rods																			
Steering knuckle tie rod					n														n
Steering gear connecting rod					n														n
Group 4—Steering Gear Parts																			
Steering gear case					x							x							
Steering gear bracket		x	x		x							x							
Steering gear arm		n		n															n
Steering gear shaft					n														n
Steering wheel spider					x							x							
Steering wheel tube (or shaft)					n														n
Spark and throttle sector	x		x		x							x							
Spark and throttle sector tube					x							x							
Spark hand lever					x							x							
Spark hand lever tube (or rod)					x							x							
Throttle hand lever					x							x							
Throttle hand lever tube (or rod).					x							x							
Steering column bracket			1		2					d, n		1, 2							
Steering worm					n		n		n										n
Steering worm sector (or gear)					n		n		n										n
Steering worm shaft					n														n
DIVISION XV—WHEELS																			
Group 1—Wheels																			
Wheel rims					x									x					
Wheel hub			n				n					n							n
Wheel hub flanges					x							x							
Wheel bearings and bearing parts.						n	n												n
Wheel brake drums	x		x		x							x							
DIVISION XVI—FRAME AND SPRINGS																			
Group 1—Frame Parts																			
Frame members					x									x		x			
Gussets					x									x		x			
Group 2—Frame Brackets and Sockets																			
Spring brackets					x							x							

Table III. Guide for Welding Automotive Equipment—Continued

The automotive part	Usual metal composition											Recommended welding method						
	Gray Cast Iron	Malleable Iron	Cast Steel	Steel Forgings	To 0.40 Carbon Steel	Over 0.40 Carbon Steel	Alloy Steels	Aluminum	Brass, Copper or Bronze	Miscellaneous	Babbitt	Braze—Welding	Welding With Rod of Similar Composition	No. 1 H.T.	Soldering	Heating	Haynes Stellite	Welding Not Recommended
DIVISION XVI—FRAME AND SPRINGS																		
Group 2—Frame Brackets and Sockets																		
Running board brackets					x							x						
Engine support brackets					x									x				
Torque arm bracket					x							x						
Radius rod bracket					x									x				
Group 3—Front Springs																		
Front springs						n	n											n
Front spring shackle					x									x				
Front spring seat					x							x						
Front spring clip plate					x							x						
Group 4—Rear Springs																		
Rear springs						n	n											n
Rear spring pivot seat					x							x						
Rear spring double shackle					x									x				
(Other parts as for front spring)																		
DIVISION XVII—HOOD, FENDERS AND SHIELDS																		
Group 1—Hood Parts																		
Hood					x			x					x					
Hood sill					x							x						
Hood handle					x							x						
Hood fastener					x							x						
Hood fastener bracket	x		x		x							x						
Group 2—Engine Shield Parts																		
Engine shield					x							x						
Engine shield bracket					x							x						
Group 3—Fenders and Running Boards																		
Running boards					x								x					
Running board shields					x								x					

Fenders					x								x						
Fender support socket					x							x							
Fender supports					x							x							
DIVISION XVIII—BODY																			
Group 1—Floor boards and Dash																			
Floor boards (metal parts)					x								x						
Dash					x								x						
Instrument board					x								x						
Group 2—Body Parts (Metal)																			
All metal panels					x								x			x			
Body posts and braces					x								x			x			
Window frames					x								x			x			
Group 3—Seat Frames					x								x			x			
DIVISION XIX—ACCESSORIES																			
Group 1—Speedometer (and parts)										n									n
Group 2—Tire Pump Parts																			
Tire pump driving gear					x		x					x							
Tire pump shaft gear					x		x					x							
Tire pump idler gear					x		x					x							
Group 3—Body Furnishings																			
Door and Window Handles					1		2		3	d, n			1, 2, 3						n
Bumpers						x	x					x							
Bumper brackets					x							x							

x—Indicates the Metal Composition and the Recommended Welding Method.

1, 2, 3—Indicates corresponding Composition and Method.

n—Welding not recommended. Minor areas may be built up if an N is placed in one of the Welding Method columns. Otherwise do not weld and do not build up.

l—Lead.

d—Die Cast Metal.

p—Indicates corresponding method for composition other than "Gray cast iron" or "to 0.40 carbon steel."

APPENDIX C

TROUBLE SHOOTING

Table I. Oxy-Acetylene Welding

Defect	Cause	Cure
Distortion	Shrinkage or deposited metal pulls welded parts together and changes their relative position.	Properly clamp or tack to resist shrinkage.
		Separate or preform parts sufficiently to allow for shrinkage of welds.
		Peen the deposited metal while still hot.
	Nonuniform heating of parts during welding causes them to distort or buckle before welding is finished.	Support parts of structure to be welded to prevent buckling in heated sections due to weight of parts themselves.
		Preheating is desirable in some heavy structures.
	Final welding of parts in distorted position prevents control of desired dimensions.	Removal of rolling or forming strains before welding is sometimes helpful.
	Improper welding sequence	Study the structure and develop a definite sequence of welding.
		Distribute welding to prevent excessive local heating.
Welding stresses	Joints too rigid	Slight movement of parts during welding will reduce welding stresses.
		Develop welding procedure that permits all parts to be free to move as long as possible.
	Improper welding procedure	Make weld in as few passes as practicable.
		Use special intermittent or alternating-welding sequence and step-back or skip or procedure.
		Properly clamp parts adjacent to the joint. Use backup to cool parts rapidly.
	Inherent in all welds, especially in heavy parts.	Peen each deposit of weld metal. Stress-relieve finished product at 1,100 to 1,250 deg F., 1 hour per inch of thickness.
Warping thin plates	Shrinkage of deposited weld metal	Distribute heat input more evenly over full length of the seam.
	Excessive local heating at the joint	Weld rapidly with a minimum input to prevent excessive local heating of the plates adjacent to the weld.
	Improper preparation of joint	Do not have excessive space between the parts to be welded. Prepare thin plate edges with flanged joints, making offset approximately equal to the thickness of the plates. No filler rod is necessary for this type of joint.
		Fabricate a U shaped corrugation in the plates parallel to and approximately ½-inch away from the seam. This will serve as an expansion joint to take up movement during and after the welding operation.
	Improper welding procedure	Use special welding sequence and step back or skip procedure.
	Improper clamping of parts	Properly clamp parts adjacent to the joint. Use backup to cool parts rapidly.

Table I. Oxy-Acetylene Welding—Continued

Defect	Cause	Cure
Poor weld appearance	Poor welding technique improper flame adjustment or welding rod manipulation.	Insure the use of the proper welding technique for the welding rod used.
		Do not use excessive heat.
		Use of a uniform weave and welding speed at all times.
	Inherent characteristic of welding rod used.	Use a welding rod designed for the type of weld.
	Improper joint preparation	Prepare all joints properly.
Cracked welds	Joint too rigid	Design the structure and develop a welding procedure to eliminate rigid joints.
	Welds too small for the size of parts joined.	Do not use too small a weld between heavy plates. Increase the size of welds by adding more filler metal.
	Improper welding procedure	Do not make welds in string beads. Make welds full size in short sections 8 to 10-inches long.
		Welding sequence should be such as to leave ends free to move as long as possible.
		Preheating parts to be welded sometimes helps to reduce high contraction stresses caused by localized high temperatures.
	Poor welds	Make sure welds are sound and the fusion is good.
	Improper preparation of joints	Prepare joints with a uniform and proper free space. In some cases, a free space is essential. In other cases, a shrink or press fit may be required.
Undercut	Excessive weaving of the bead, improper tip size, and insufficient welding rod added to molten puddle.	Modify welding procedure to balance weave of bead and rate of welding rod deposition, using proper tip size.
		Do not use too small a welding rod.
	Improper manipulation of the welding rod.	Avoid excessive and nonuniform weaving.
		A uniform weave with unvarying heat input will aid greatly in preventing undercut in butt welds.
	Poor welding technique—improper welding rod deposition with nonuniform heating.	Do not hold a welding rod too low near the lower edge of the plate in the vertical plane when making a horizontal fillet weld, as under cut on the vertical plate will result.
Incomplete penetration	Improper preparation of joint	Be sure to allow the proper free space at the bottom of the weld.
		Deposit a layer of weld metal on the back side of the joint, where accessible, to insure complete fusion in lower V.
	Use of too large a welding rod	Select proper sized welding rod to obtain a balance in the heat requirements for melting welding rod, breaking down side walls, and maintaining the puddle of molten metal at the desired size.
		Use small diameter welding rods in a narrow welding groove.
	Welding tip too small—insufficient heat input.	Use sufficient heat input to obtain proper penetration for the plate thickness being welded.
	Too fast a welding speed	Welding speed should be slow enough to allow welding heat to penetrate to the bottom of the joint.
Porous welds	Inherent properties of the particular type of welding rod.	Use welding rod of proper chemical analysis.

Table I. Oxy-Acetylene Welding—Continued

Defect	Cause	Cure
	Improper welding procedure and flame adjustment.	Avoid overheating of molten puddle of weld metal.
		Use the proper flame adjustment and flux, if necessary, to insure sound welds.
Porous welds	Insufficient puddling time to allow entrapped gas, oxides, and slag inclusions to escape to the surface.	Use the multilayer welding technique to avoid carrying too large a molten puddle of weld metal.
		Puddling keeps the weld metal molten longer and often insures sounder welds.
	Poor base metal	Modify the normal welding procedure to weld poor base metals of a given type.
Brittle welds	Unsatisfactory welding rod producing air-hardening weld metal.	Avoid welding rods producing air hardening weld metal where ductility is desired. High tensile low alloy steel rods are air hardened and require proper base metal preheating, post-heating or both, to avoid cracking due to brittleness.
	Excessive heat input with oversized welding tip, causing coarse-grained and burnt metal.	Do not use excessive heat input, as this may cause coarse grain structure and oxide inclusions in weld metal deposits.
	High-carbon or alloy base metal which has not been taken into consideration.	A single pass weld may be more brittle than a multilayer weld, because it has not been refined by successive layers of weld metal.
		Welds may absorb alloy elements from the parent metal and become hard. Do not weld a steel unless the analysis and characteristics are known.
	Improper flame adjustment and welding procedure.	Adjust the flame so that molten metal does not boil, foam, or spark.
Poor fusion	Improper size of welding rod	When welding in narrow V's, use a welding rod small enough to reach the bottom.
	Improper size of tip and heat input	Use sufficient heat to melt welding rod and to break down side walls of plate edges.
	Improper welding technique	Be sure the weave is wide enough to melt the sides of a joint thoroughly.
	Improper preparation of joint	The deposited metal should completely fuse with the side walls of plate to form a consolidated joint of base and weld metal.
Corrosion	Type of welding rod used	Select welding rods with the proper corrosion-resistant properties which are not changed by the welding process.
	Improper weld deposit for the corrosive fluid or atmosphere.	Use the proper flux on both parent metal and welding rod to produce welds with the desired corrosion resistance.
		Do not expect more from the weld than you do from the parent metal. On stainless steels, use welding rods that are equal or better than the base metal.
		For best corrosion resistance use a filler rod whose composition is the same as the base metal.
	Metallurgical effect of welding	When welding 18–8–austenitic stainless steel, be sure the analysis of the steel and the welding procedure is correct, so that the butt welding does not cause carbide precipitations. This condition can be corrected by annealing at 1,900 to 2,100 deg F.

Table I. Oxy-Acetylene Welding—Continued

Defect	Cause	Cure
CORROSION—Continued		
	Improper cleaning of weld	Certain materials such as aluminum require careful cleaning of all slag to prevent corrosion.
Brittle joints	Air-hardening base metal	In welding on medium carbon steel or certain alloy steels, the fusion zone may be hard as the result of rapid cooling. Preheating at 300 to 500 deg F., should be resorted to before welding.
	Improper welding proced	Multilayer welds will tend to anneal hard zones. Stress relieving at 1,000 to 1.250 deg F., after welding will generally reduce hard areas formed during welding.
	Unsatisfactory welding rod	The use of austenitic welding rods will often work on special steels, but the fusion zone will generally contain an alloy which is hard.

Table II. Electric-Arc Welding

Defect	Cause	Cure
Distortion	Shrinkage of deposited metal pulls welded parts together and changes their relative positions.	Properly tack or clamp parts to resist shrinkage. Separate or preform parts so as to allow for shrinkage of welds. Peen the deposited metal while still hot.
	Nonuniform heating of parts during welding causes them to distort or buckle before welding is finished. Final welding of parts in distorted position prevents control of proper dimensions.	Preheating is desirable in some heavy structures. Removal of rolling or forming strains by stress relieving before welding is sometimes helpful.
	Improper welding sequence	Study structure and develop a definite sequence of welding. Distribute welding to prevent excessive local heating.
Welding stresses	Joints too rigid	Slight movement of parts during welding will reduce welding stresses. Develop welding procedure that permits all parts to be free to move as long as possible.
	Improper welding procedure	Make weld in as few passes as practicable. Use special intermittent or alternating welding sequence and step back or skip procedures. Properly clamp parts adjacent to the joint. Use backup to cool parts rapidly.
	Inherent in all welds, especially in heavy parts.	Peen each deposit of weld metal. Stress relieve finished product at 1,100 to 1,250 deg F., 1 hour per inch of thickness.
Warping (thin plates)	Shrinkage of deposited weld metal	Select electrode with high welding speed and moderate penetrating properties.
	Excessive local heating at the joint	Weld rapidly to prevent excessive local heating of the plates adjacent to the weld.
	Improper preparation of joint	Do not have excessive root opening in the joint between the parts to be welded. Hammer joint edges thinner than the rest of plate before welding. This elongates edges and the weld shrinkage causes them to pull back to the original shape.

Table II. Electric-Arc Welding—Continued

Defect	Cause	Cure
	Improper welding procedure	Use special intermittent or alternating welding sequence and step back or skip procedure.
	Improper clamping of parts	Properly clamp parts adjacent to the joint. Use backup to cool parts rapidly.
Poor weld appearance	Poor welding technique—improper current or electrode manipulation.	Insure the use of the proper welding technique for the electrode used.
		Do not use excessive welding current.
		Use a uniform weave or rate of travel at all times.
	Inherent characteristic of electrode used.	Use an electrode designed for the type of weld and base metal and the position in which the weld is to be made.
	Welding position for which electrode is not designed.	Do not make fillet welds with down hand (flat position) electrodes unless the parts are positioned.
	Improper joint preparation	Prepare all joints properly.
Cracked welds	Joint too rigid	Design the structure and develop a welding procedure to eliminate rigid joints.
	Welds too small for size of parts joined.	Do not use to small a weld between heavy plates. Increase the size of welds by adding more filler metal.
	Improper welding procedure	Do not make welds in string beads. Make weld full size in short sections 8 to 10-inches long. (This is block sequence).
		Welding sequence should be such as to leave ends free to move as long as possible.
		Preheating parts to be welded sometimes helps to reduce high contraction stresses caused by localized high temperature.
		Fill all craters at the end of the weld pass by moving the electrode back over the finished weld for a short distance equal to the length of the crater.
	Poor welds	Make sure welds are sound and the fusion is good. Be sure arc length and polarity are correct.
	Improper preparation of joints	Prepare joints with a uniform and proper root opening. In some cases, a root opening is essential. In other cases, a shrink- or press-fit may be required.
Undercut	Excessive welding current	Use a moderate welding current and do not try to weld at too high a speed.
	Improper manipulation of electrode	Do not use too large an electrode. If the puddle of molten metal becomes too large, undercut may result.
		Excessive width of weave will cause undercut and should not be used. A uniform weave, not over three times the electrode diameter, will aid greatly in preventing undercut in butt welds.
		If an electrode is held too near the vertical plate in making a horizontal fillet weld, undercut on the vertical plate will result.

Table II. Electric-Arc Welding—Continued

Defect	Cause	Cure
	Attempting a weld in a position for which the electrode is not designed.	Electrodes should be used for welding in the position for which they were designed.
		Be sure to allow the proper root opening at the bottom of a weld.
		Use a backup bar if possible.
		Chip or cut out the back of the joint and deposit a bead of weld metal at this point.
	Use of too large an electrode	Do not expect excessive penetration from an electrode.
		Use small diameter electrodes in a narrow welding groove.
	Insufficient welding current	Use sufficient welding current to obtain proper penetration. Do not weld too rapidly.
	Too fast a welding speed	Control the welding speed to penetrate to the bottom of the welded joint.
Porous welds	Inherent properties of electrodes	Some electrodes inherently produce sounder welds than others. Be sure that proper electrodes are used.
	Improper welding procedure and current setting.	A weld made of a series of string beads may contain small pinholes. Weaving will often eliminate this trouble.
	Insufficient puddling time to allow entrapped gas to escape.	Puddling keeps the weld metal molten longer and often insures sounder welds.
	Dirty base metal	In some cases, the base metal may be at fault. Check this for segrations and impurities.
Brittle welds	Unsatisfactory electrode	Bare electrodes produce brittle welds. Shielded-arc electrodes must be used if ductile welds are required.
	Excessive welding current causing coarse-grained and burnt metal.	Do not use excessive welding current, as this may cause coarse grained structure and oxidized deposits.
	High-carbon or alloy-base metal which has not been taken into consideration.	A single pass weld may be more brittle than a multilayer weld because its microstructure has not been refined by successive layers of weld metal.
		Welds may absorb alloy elements from the parent metal and become hard.
		Do not weld a metal unless the analysis and characteristics are known.
Poor fusion	Improper diameter of electrode	When welding in narrow V's, use an electrode small enough to properly reach the bottom of the joint.
	Improper welding current	Use sufficient welding current to deposit the metal and penetrate into the plates.
		Heavier plates require higher current for a given electrode than light plates.
	Improper welding technique	Be sure the weave is wide enough to melt the sides of a joint thoroughly.
	Improper preparation of joint	The deposited metal should fuse with the base metal and not curl away from it or merely adhere to it.

Table II. Electric Arc Welding—Continued

Defect	Cause	Cure
Corrosion	**Type of electrode used**	Bare electrodes produce welds that are less resistant to corrosion than the parent metal.
		Shielded-arc electrodes produce welds that are more resistant to corrosion than the parent metal.
		For the best corrosion resistance, use a filler rod whose composition is similar to that of base metal.
	Improper weld deposit for corrosive fluid or atmosphere.	Do not expect more from the weld than you do from the parent metal. On stainless steels, use electrodes that are equal to or better than the parent metal in corrosion resistance.
	Metallurgical effect on welding	When welding 18–8 austenitic-stainless steel, be sure the analysis of the steel and welding procedure is correct, so that the welding does not cause carbide precipitations. This condition can be corrected by annealing at 1,900 to 2,100 deg F., after welding.
	Improper cleaning of weld	Certain materials, such as aluminum, require careful cleaning of all slag after welding to prevent corrosion in service.
Brittle joints	**Air-hardening base metal**	In welding on medium carbon steel or certain alloy steels, the heat affected zone may be hard as a result of rapid cooling. Preheating at 300 to 500 deg F., should be restored to before welding.
	Improper welding procedure	Multilayer welds will tend to anneal hard heat affected zones.
		Stress relieving at 1,100 to 1,250 deg F., after welding will generally reduce hard areas formed during welding.
	Unsatisfactory electrode	The use of austenitic electrodes will often work successfully on special steels, but the heat-affected zone will generally contain an alloy which is hard.
Magnetic blow	**Magnetic field causing a direct current arc to blow away from the point at which the arc is directed. Magnetic blow is particularly noticeable at ends of joints and in corners.**	Proper location of the ground on the work. Placing the ground in the direction the arc blows from the point of welding is often helpful.
		Separating the ground in two or more parts is helpful.
		Weld toward the direction the arc blows.
		Hold a short arc.
		Changing the angle of the electrode relative to the work may help to stablize the arc.
		Magnetic blow is held to a minimum in alternating current welding.
Spatter	**Inherent property of some electrodes.**	Select proper type of electrode.
	Excessive welding current used for the type or diameter of electrode.	Use a short arc but do not use excessive welding current.
	Coated electrodes produce larger spalls than bare electrodes.	Paint parts adjacent to weld with whitewash or other protective coating. This prevents spalls from welding to parts and they can be easily removed.

APPENDIX D

MATERIALS USED FOR BRAZING, WELDING, SOLDERING, ARC CUTTING, AND METALLIZING

1. General

This appendix contains listings of common welding equipment and materials, used in connection with the equipment, to preform welding operations. These lists are published to inform using personnel of those materials available for brazing, welding, soldering, cutting and metallizing; to repair, rebuild, and/or produce items requiring welding procedures.

2. Scope

The data provided in this appendix are for information and guidance. The listings contained herein include descriptions, identifying references, and specific use of common welding materials available in the Army supply system.

Table I. Common Welding Equipment By Federal Stock Class

FSC	Equipment
3436	ALIGNMENT TOOL, WELDING, PIPE
6830	ACETYLENE, TECHNICAL
8415	APRON, WELDERS
6830	ARGON, TECHNICAL
3439	BAG, WELDING ROD
3439	BLOCK, CARBON (CORBON BLOCK)
3431	BONDING MACHINE, METALIZING
3439	BRAZING ALLOY
3433	BRAZING & SOLDERING SET
7920	BRUSH, WIRE, SCRATCH
6151	CABLE ASSY, POWER, ELECTRICAL
3439	CARBON BLOCK
3439	CARBON PASTE
3439	CARBON ROD
3431	CHEST, WELDING
3436	CLAMP, PIPE WELDING (ALIGNMENT TOOL, WELD)
3439	CLEANER SET, WELDING & CUT. TIPS
3433	CUTTING ATTACHMENT, WELD. TORCH
3433	CUTTING MACHINE, OXYGEN
3439	DESOLDERING & RESOLDERING SET
3439	ELECTRODE, CHAMFERING
3439	ELECTRODE, CUTTING
3439	ELECTRODE, HEATING
3439	ELECTRODE, OVERLAY
3439	ELECTRODE, WELDING
5120	FLINT TIP, FRICTION IGNITER
5120	FRICTION IGNITER (IGNITER, FRICTION)
3439	FLUX (for brazing, soldering, welding)
8415	GLOVES (cloth and leather)
4240	GOGGLES, INDUSTRIAL
5120	HAMMER, WELDERS
6830	HELIUM, TECHNICAL
4240	HELMET, WELDERS
3439	HOLDER, ELECTRODE, WELDING
5120	IGNITER, FRICTION
6150	LEAD, ELECTRICAL
4240	LENS, GOGGLES, INDUSTRIAL
4240	LENS, HELMET, WELDERS
3432	MANIFOLD, GAS CYLINDER
3433	METALLIZING GUN (SPRAY GUN, METALIZ)
3431	METALLIZING MACHINE (BONDING MACH.)
3433	METALLIZING OUTFIT
8415	MITTENS (cloth or leather)
3439	MOISTURE STABILIZER, WELDING ELECT.
6830	NITROGEN, TECHNICAL.
343	OVEN, WELDING ELECTRODES (MOIST. STABI.)
6830	OXYGEN, TECHNICAL
3439	PASTE, CARBON (CARBON PASTE)
3439	REEL, WIRE, METALLIZING
	REGULATOR, COMPRESSED GAS
	REGULATOR, FLUID PRESSURE
	REGULATOR, ARGON-HELIUM-NITROGEN-ETC. (See VALVE, REGULATING, FLUID PRESSURE)
3433	REGULATOR & FILTER UNIT, AIRCONTROL (For use with metallizing gun)
3439	ROD, WELDING
3431	SCREEN, WELDING
4240	SHIELD, ARC VIEWING, HAND HELD

Table I. Common Welding Equipment
By Federal Stock Class

FSC	Equipment
8415	SLEEVE, WELDERS
3439	SOLDER
3433	SPRAY GUN, METALLIZING
3433	TORCH, ARC-OXYGEN, CUTTING
3431	TORCH, ARC WELDING, GAS SHIELDED (TIG Torch set)
3433	TORCH, CUTTING
3433	TORCH, WELDING
3433	TORCH OUTFIT, CUTTING-WELDING
3433	TORCH SET, CUTTING-WELDING
3433	TORCH OUTFIT, SOLDERING & HEATING
	VALVE, REGULATING, FLUID PRESSURE
	VALVE, REGULATING, FLUID PRESSURE
	VALVE, REGULATING, FLUID PRESSURE
	VALVE, REGULATING, FLUID PRESSURE
	VALVE, REGULATING, FLUID PRESSURE
	(REGULATORS and VALVES are under the following Federal stock classes; 3431, 3432, 3433, 6685 and 6920)
3431	WELDING MACHINE, ARC
3432	WELDING MACHINE, RESISTANCE
3431	WELDING SET, ARC, GAS SHIELDED (MIG Gun set)
3439	WIRE, SPRAY GUN, METALLIZING
5120	WRENCH, TORCH & REGULATOR

Table II. Metallizing Wire

Wire Material	Dia.	Coil Weight (Pounds)	(FSC 3439) FIIN	Identifying Reference	Use
12 to 14% Chrome	⅛	50	542–1307	MIL–W–6712, type 1 (Chrome)	Metallizing Spray Gun
18% Cr, 8% N:	"	25	223–3695	" " (18–8)	"
Hi-Carbon Steel	"	25	223–3701	" " (.80C)	"
"	"	50	265–7096	" " (.80C)	"
Med-Carbon Steel	"	50	223–3703	" " (.25C)	"
Mild Steel	"	50	223–3707	(.10C)	"
99% Molybdenum	"	5	006–4800	" type 2 (Molybdenum)	"
"	.0907	5	294–4562	" " (")	"
"	.0907	20	903–7703	" " (")	"
99% Copper	⅛	25	223–3735	" " (Copper)	"
60% Cu, 40% Zn	"	25	223–3731	" " (Naval Brass)	"
90% Sn, 8 Sb	"	25	223–3738	" " (Tin-Babbit)	"
99% Aluminum	"	25	223–3728	" " (Aluminum)	"

Table III. Welding Electrodes

Positions				Current				Shield		Material	Dia	Length	(FSC 3439) FIIN	Identifying Reference	Use
Flat	Horiz.	Vert	O'head	AC	DC Str	DC Rev	DC S & R	Yes	No						
X	X	X	X			X		X		Steel	3/32	12	262–2669	MIL–E–15599, type 6010, C1 1	Welding of zinc-coated, low & med carbon steels; also med carbon, high tensile steel plate up to ⅝-inch thickness
X	X	X	X			X		X		"	⅛	14	262–2670	" " " "	
X	X	X	X			X		X		"	5/32	14	262–2671	" " " "	
X	X	X	X			X		X		"	3/16	14	262–2672	" " " "	
X	X					X		X		"	¼	18	262–2674	" " " C1 2	
X	X	X	X	X		X		X		Steel	3/32	12	262–2652	MIL–E–15599, type 6011, C1 1	
X	X	X	X	X		X		X		"	⅛	14	262–2653	" " " "	
X	X	X	X	X		X		X		"	5/32	14	262–2654	" " " "	
X	X	X	X	X		X		X		"	3/16	14	262–2655	" " " "	
X	X			X		X		X		"	¼	18	262–2657	" " " C1 2	
X	X	X	X	X	X			X		Steel	3/16	14	273–3719	MIL–E–15599, type 6012, C1 1	Welding of uncoated mild & med carbon steels; electrodes suitable for poorly fitted joints
X	X			X	X			X		"	¼	18	262–3876	" " " C1 2	
X	X	X	X	X	X			X		Steel	1/16	9	262–2645	MIL–E–15599, type 6013, C1 1	
X	X	X	X	X	X			X		"	3/32	12	267–4787	" " " "	Aircraft welding of mild and low alloy sheet steels; shallow penetration
X	X	X	X	X	X			X		"	⅛	14	262–2648	" " " "	
X	X	X	X	X	X			X		"	5/32	14	262–2649	" " " "	
X	X	X	X	X	X			X		"	3/16	14	262–2650	" " " "	
X	X			X	X			X		Steel	⅛	14	262–2659	MIL–E–15599, type 6020, C1 2	Uncoated, med carbon, high tensile steel; deep penetration
X	X			X		X	X	X		Steel	5/32	14	061–2896	MIL–E–15599, type 6027, C1 2	Uncoated, med carbon, high tensile steel; deep penetration; fast weld speed
X	X			X		X	X	X		"	3/16	18	061–2897	" " " "	
X	X			X		X	X	X		"	¼	18	061–2898	" " " "	
X	X	X	X	X		X		X		Steel	3/16	14	853–2719	MIL–E–22200/1, type 7018, C1 1	Low hydrogen electrode; med & high tensile steels of up to ⅝-inch thickness
X	X			X		X		X		"	7/32	18	542–0964	" " " C1 2	
X	X	X	X			X		X		Steel	⅛	14	853–2716	MIL–E–22200/1, type 9018, C1 1	Low hydrogen electrode; low alloy, med & high tensile steels (HY–80); fillet welds in low alloy, high tensile structural steels (T–1 and RQ–100A)
X	X	X	X			X		X		"	5/32	14	853–2718	" " " "	

Table III. Welding Electrodes—Continued

Positions				Current				Shield		Material	Dia	Length	(FSC 3439) FIIN	Identifying Reference	Use
Flat	Horiz.	Vert	O'head	AC	DC Str	DC Rev	DC S&R	Yes	No						
X	X	X	X			X		X		Steel	1/8	14	587-2412	MIL-E-22200/1, type 11018, C1 1	Low hydrogen electrode; groove butt joints in low alloy, high tensile structural steels (HY-80, T-1, & RQ-100A)
X	X	X	X			X		X		"	5/32	14	587-2413	" " " "	
X	X	X	X			X		X		"	3/16	14	878-2158	" " " "	
X	X	X	X	X		X		X		Steel	5/32	14	287-7089	MIL-E-18038, type 10016, C1 1	Low hydrogen electrode; welding of low alloy, high tensile steels (HY-80)
X	X	X	X	X		X		X		"	3/16	14	287-7090	" " " "	
X	X	X	X	X		X		X		"	1/8	14	287-7088	" " " "	
X	X			X		X		X		"	1/4	18	288-4041	" " " C1 2	
X	X	X	X			X		X		"	1/8	14	984-4783	MIL-E-22200/1, type 10018, C1 1	
X	X	X	X			X		X		"	5/32	14	984-4786	" " " "	
X	X	X	X			X		X		"	3/16	14	984-4787	" " " "	
X				X					X	Steel	3/32	Coil	068-4260	MIL-E-18193, type A-1	Welding & surfacing carbon and low alloy steels using submerged-arc machines (use type "A" fluxes per MIL-F-18251)
X				X					X	"	1/8	Coil	200-1583	" " "	
X				X					X	"	1/8	Coil	068-4262	" type A-3	
X				X					X	"	5/32	Coil	068-4261	" " "	
X	X	X	X	X			X	X		Steel	5/32	14	246-9524	MIL-E-6843, C1 E10013	Aircraft welding of med carbon & low alloy steel; shallow penetration
X					X			X		Steel	1/4	14	267-4785	MIL-E-19141, type A2A, C1 3	Corrosion & abrasion resistant surfacing (tough, forgeable) (1100 deg service) (severe impact)
X					X			X		"	3/16	14	262-2639	" " A2C, C1 3	
X					X			X		"	1/4	14	262-2640	" " " "	
X					X			X		"	1/8	14	294-7038	" type Fe5-B, C1 3	
X					X			X		"	3/16	14	752-7818	" type FeMn-A, C1 3	
X	X	X	X		X			X		Steel	1/8	14	262-2746	MIL-E-16589, type 52-15, C1 1	Lo-hyd'n; 1¼% Cr, ½% Mo hi-temp S(950°F)
X	X	X	X	X	X			X		"	1/8	14	204-3140	" type 202-16, C1 1	Lo-hyd'n; 5% Cr, ½% Mo hi-temp S (1200°F.)
X	X	X	X	X	X			X		"	5/16	14	204-4512	" " " "	
X	X			X	X			X		"	3/16	14	204-3277	" " " C1 2	
X	X	X	X		X			X		"	1/8	14	984-4778	" type 94-15, C1 1	Lo-hyd'n 2¼% Cr, 1% Mo hi-temp S(1050°F.)
X	X	X	X		X			X		"	5/32	14	984-4779	" " " "	
X	X	X	X		X			X		"	3/16	14	984-4780	" " " "	
X	X	X	X		X			X		Steel	1/8	14	246-9544	MIL-E-13080, type 307L-15, C1 1	High hardenability steels & armor
X	X	X	X		X			X		"	5/32	14	246-9545	" " " "	
X	X				X			X		"	3/16	14	266-9752	" " " C1 2	

X	X	X	X			X	X		Steel	1/16	9	245–6630	MIL–E–22200/2, type 308–15, C1 1		
X	X	X	X			X	X		"	⅛	14	277–7550	" " " "		
X	X	X	X	X		X	X		"	5/32	14	528–9064	" type 308–16, C1 1		Weld 18% Cr, 8% Ni corrosion resistant steel (18–8)
X	X	X	X			X	X		"	5/32	14	262–2696	" type 347–15, C1 1		
X	X	X	X			X	X		"	⅛	14	262–2695	" " " "		
X	X			X		X	X		"	3/16	14	262–2697	" type 347–16, C1 2		
X	X	X	X				X			3/32	9	204–3246	MIL–E–22200/3, type 3N10, C1 1		
X	X						X		"	5/32	10–14	204–3247	" " " C1 2		Wrought nickel copper alloys
X	X						X		"	3/16	10–14	204–3244	" " " "		
X	X						X		"	3/16	14	262–2644	" " " "		
X	X	X	X				X		"	⅛	14	246–9543	" type 3N14, C1 1		Wrought nickel-copper alum alloys
X	X						X		"	5/32	14	852–0761	" type 4N10, C1 2		Wrought nickel-copper alloys to steel
X	X	X	X				X		"	⅛	14	901–7637	" type 4N11, C1 1		Wrought commercially pure Ni to steel
X	X	X	X				X		"	3/32	12	866–4149	" type 8N10, C1 1		Nickel copper alloy castings
X	X						X		"	5/32	14	865–4728	" " " C1 2		
X	X	X	X			X	X		Steel	⅛	14	984–4767	MIL–E–22200/6, type 7015, C1 1		
X	X	X	X			X	X		"	5/32	14	984–4768	" " " "		Weld mild & med strength steels
X	X	X	X			X	X		"	3/16	14	984–4770	" " " "		
X	X	X	X			X	X		Steel	⅛	14	984–4771	MIL–E–22200/6, type 8015–C3, C1 1		
X	X	X	X			X	X		"	5/32	14	984–4773	" " " "		Weld low alloy, med strength steels
X	X	X	X			X	X		"	3/16	14	984–4776	" " " "		
X	X	X	X			X	X			5/32	14	262–2678	MIL–E–22200/7, type 7010–A1, C1 1		
X	X	X	X			X	X			3/16	14	262–2679	" " " "		Molybdenum alloy S pipe, forging, & casting
X	X					X	X			¼	18	262–2681	" " " C1 2		
X				X			X		Hi-Speed S	⅛	14	255–8922	ASTM A339–56T, type EFe5–A		Cutting tool repair & buildup; for 1100°F use
X	X	X	X	X			X		Mild steel	⅛	14	293–4716	ASTM A398–65T, type EST		Cast iron nonmachinable weld
X	X	X	X	X			X		Nickel	⅛	14	270–9873	" " type ENI–C1		Cast iron machinable weld
X	X	X	X	X			X		"	⅛	14	640–2351	" " type ENFE–C1		
X	X	X	X	X				X	97% Ni, 1% Co	⅛	18	449–6558	METCO Co. "FUSE BOND"		Grooving and roughing prior to metallizing
X	X					X	X		Bronze	⅛	14	200–1376	MIL–E–13191, type CuSn–A		
X	X					X	X		"	3/16	14	255–8910	" " "		Welding of phosphor bronze, brass, copper & cast iron
X	X					X	X		"	⅛	14	262–2738	" type CuSn–C		
X	X					X	X		"	5/32	14	262–2739	" " "		
X	X					X	X		"	3–16	14	262–2740	" " "		

Table III. Welding Electrodes—Continued

Positions				Current				Shield		Material	Dia	Length	(FSC 3439) FIIN	Identifying Reference	Use
Flat	Horiz.	Vert	O'head	AC	DC Str	DC Rev	DC S & R	Yes	No						
X				X				X		Copper	5/32	14	618–5797	MIL–E–278, type Cu A1–B	Alum bronzes, hi-stgh, cop-zn alloys
X				X				X		"	5/32	14	247–5157	MIL–E–278, type Cu A1–D	Wear resistant bearing surfaces
X	X					X		X		Alum	3/32	14	262–2597	MIL–E–15597, type 4043, C1 2	Welding of Alum & Alum alloys
X	X					X		X		"	⅛	14	262–2598	" " " "	
X	X					X		X		"	5/32	14	262–2599	" " " "	
X	X					X		X		"	3/16	14	262–2600	" " " "	
X						X		X		"	¼	14	262–2601	" " " C1 3	
X	X	X	X						X	Alum	3/64	1 lb Co	775–6476	MIL–E–16053; type 5356	Semi-auto & machine MIG welding of Alum & Alum alloys
X	X	X	X			X		X		Alum	3/16	14	974–7079	EUTECTIC #2101E	Heavy Alum castings, long joints & filler

Table IV. Overlay, Welding and Cutting, Chamfering and Heating Electrodes

Positions				Current				Shield		Material	Dia	Length	(FSC 3439) FIIN	Identifying Reference	Use
Flat	Horiz.	Vert	O'head	AC	DC Str	DC Rev	DC S & R	Yes	No						
		ELECTRODE, OVERLAY													
X	X	X	X	X				①		Chrome	5/32		902–4214	EUTECTIC Co. "EUTECTROD #10"	Overlay on ferrous metals
X	X	X	X	X				①		"	¼		902–4215	" "	
X	X	X	X	X				①		"	3/16		902–4216	" "	
X				X				①			3/16		902–4208	EUTECTIC Co. "EUTECTRODE #680"	Overlay on Tool & Die steels
X				X				①			3/32		902–4209	EUTECTIC Co. "EUTECTRODE #680"	
X				X				①			5/32		910–4007	EUTECTIC Co. "EUTECTRODE #680"	

X					X	X		Steel	¼	14	267–4785	MIL–E–19141, type A2A, Cl 3		Corrosion & abrasion resistant surfacing	(tough, forgeable)
X					X	X		"	¼	14	262–2640	type A2C, Cl 3			(tough, forgeable)
X					X	X		"	3/16	14	262–2639	" " "			(tough, forgeable)
X					X	X		"	⅛	14	294–7038	type Fe5–B, Cl 3			(1100°F, service)
X					X	X		"	3/16	14	752–7818	type FeMn–A, Cl 3			(severe impact)
ELECTRODE, WELDING & CUTTING															
X	X	X	X			②		Tubular S	③		255–7711	MIL–E–17764		Under water arc-acetylene cutting	
X	X	X	X				X	Carbon④	3/16	12	262–4227	MIL–E–17777, type C		Carbon arc welding process	
							X	"	⅜	12	262–4228	" "			
							X	"	½	12	262–4229	" "			
							X	"	¾	12	262–4230	" "			
							X	"	¼	12	262–4294	" "			
X	X	X	X	X		⑤		"	⅜	12	276–9946	" type Cu C		Arc cutting & gouging	
X	X	X	X				X	99% Tungs	1/16	7	814–6030	ASTM B297–55T, class EWP		Fuse aluminums/or magnesiums	
X	X	X	X				X	"	3/32	7	814–6031	" "			
X	X	X	X				X	"	⅛	7	814–6029	" "			
X	X	X	X				X	"	5/32	7	814–6028	" "			
X	X	X	X	X		⑥			5/32		766–7749	EUTECTIC Co. "CUTTRODE #1"		Cutting w/out air (arc blow from coating)⑤	
ELECTRODE, CHAMFERING															
X	X	X	X	X			X		3/16		902–4213	EUTECTIC Co. "CHAMFERTRODE"		Chamfering & grooving	
ELECTRODE, HEATING															
X	X	X	X	X			X	Carbon	⑦		296–9891	IDEAL INDUSTRIES	#L–3321	Spares for IDEAL soldering	(Pliers #12–067)
X	X	X	X	X			X	"	⑧		296–9892	" "	#L–2925		(Pliers #12–607)
X	X	X	X	X			X	"	½	3	242–2599	" "	#L–2926		(Fork #12–068)
X	X	X	X	X			X	"	½	3½	242–2600	" "	#L–3322		(Pencil #12–069)
X	X	X	X	X			X	"	⅛	3	765–5395	" "	#L–4848		(Pencil #12–166)
X	X	X	X	X			X	"	⅛	3	818–5858	" "	#L–5202		(Pencil #12–168)
X	X	X	X	X			X	"	3/16	3	818–5857	" "	#L–4866		(Pencil #12–165)
X	X	X	X	X			X	Metal	1/16	3½	818–5859	" "	#L–5241		(Pencil #12–167)

① Flux coated.
② Covered for underwater use.
③ 5/16 od, 0.112 id, 14" long.
④ See TB 9–3439–203/1 for application using standard electrode holders.
⑤ Copper coated carbon electrode.
⑥ Exothermic coating effects arc blow without air source.
⑦ Flat shape, ½" wide by 1½" long.
⑧ Curved surface, ½" wide by 1½" long.

Table V. Welding Rod

Positions: Flat	Horiz.	Vert.	O'head	Process: Oxy-Acet	Carbon & Tung-Arc	Metal-Arc	Coated: Yes	No	Material	Dia	Length	(FSC 3439) FIIN	Identifying Reference	Use
X	X	X	X	X		X		X	Steel	1/16	36	246–0564	MIL–R–908, Cl 1	
X	X	X	X	X			Cu		"	3/32	36	246–0565	" "	
X	X	X	X	X				X	"	⅛	36	246–0566	" "	Welding of low & med carbon steels (not aircraft)
X	X	X	X	X			Cu		"	5/32	36	246–0567	" "	
X	X	X	X	X			Cu		"	3/16	36	246–0568	" "	
X	X	X	X	X				X	"	¼	36	246–0569	" "	
X	X	X	X	X				X	CI	⅛	24	247–2981	MIL–R–908, Cl 2	
X	X	X	X	X				X	"	3/16	24	247–2980	" "	Welding of cast iron parts
X	X	X	X	X				X	"	¼	24	246–0551	" "	
X	X	X	X	X	X	X		X	Med carb S	1/16	36	294–6910	MIL–R–5632, Cl 1	
X	X	X	X	X	X	X	Cu		"	⅛	36	163–4362	" "	Aircraft welding of low & medium carbon steels
X	X	X	X	X	X	X	Cu		"	3/16	36	163–4363	" "	
X	X	X	X	X	X	X		X	Lo-Alloy S	1/16	36	245–0233	MIL–R–5632, Cl 2	
X	X	X	X	X	X	X	Cu		"	3/32	36	294–7751	" "	
X	X	X	X	X	X	X		X	"	⅛	36	204–3592	" "	Aircraft welding of low alloy steels (heat-treat after weld)
X	X	X	X	X	X	X		X	"	3/16	36	204–3591	" "	
X	X	X	X	X	X	X	Cu		"	¼	36	262–4279	" "	
X	X	X	X	X	X	X		X	AISI #309	⅛	36	288–1469	MIL–R–5031, Cl 3	Welding of stainless steel 309
X	X	X	X	X	X	X		X	AISI #316	1/16	36	246–0575	" Cl 5	316
X	X	X	X	X	X	X		X	AISI #316	3/32	36	246–0576	" "	316
X	X	X	X	X	X	X		X	AISI #316	⅛	36	246–0577	" "	316
X	X	X	X					X	AISI #316 Elc	1/16	36	163–4360	" Cl 6	316–*ELC*
X			X					X	AISI #349	1/16	36	245–0234	" Cl 8	349
X	X	X	X	X				X	(18% Cr.)	¼	18	542–0411	MIL–R–17131, Cl Ni Cr C	Corrosion & abrasion resistant overlays
X	X	X	X	X				X	(75% Ni.)	5/16	18	542–0412	" " " " "	
X	X	X	X	X				X	70Ni, 15Cr 10Fe.	1/16	36	273–8824	QQ–R–571, type 2, Cl Ni Cu Fe–4	Nickel-chrome-iron alloy (use flux)
								X	70Ni, 30Cu	⅛	36	246–0560	QQ–R–571, type 2, Cl Ni Cu–5	Nickel-copper alloy (use flux)
								X	" "	3/16	36	246–0562	" " " " " "	
								X	" "	¼	36	254–5039	" " " " " "	

X	X	X	X					X	93Cu, 6Sn	⅛	36	255–8943		type 1, Cl Cu Sn–A	Phosphor bronze (use flux for carbon-arc)
X	X	X	X					X	" "	3/16	36	255–8944	"	" " " " "	
X	X	X	X	X				X	60Cu, 40Zn	1/16	36	268–9668	"	" " Cl Cu Zn–A	Steel, CI, malleable iron (use flux)
X	X	X	X	X				X	" "	3/32	36	262–7565	"	" " " " "	
X	X	X	X	X				X	" "	⅛	36	247–2978	"	" " " " "	
X	X	X	X	X				X	60Cu, 30Zn, 10Ni.	1/16	36	255–7757	QQ–R–571, type 1, Cl Cu Zn–B		Steel & cast iron; build-up surfaces (use flux)
X	X	X	X	X				X	" "	3/16	36	254–5033	"	" " " " "	
X	X	X	X	X				X	" "	¼	36	254–5034	"	" " " " "	
X	X	X	X	X				X	60Cu, 40Zn	⅛	36	244–4540	QQ–R–571, type 1, Cl Cu Zn–C		Welding of steel & cast iron (use flux)
X	X	X	X	X				X	" "	3/16	36	244–4541	"	" " " " "	
X	X	X	X	X				X	" "	¼	36	244–4542	"	" " " " "	
X	X	X	X	X	X	X		X	99% Alum	⅛	36	268–9652	QQ–R–566, Cl 1100		Aluminum & manganese—aluminum
X	X	X	X	X	X	X		X	93 Al, 6 Si	1/16	36	178–8590	QQ–R–566, Cl 4043		Aluminum & silicon & manganese—aluminums
X	X	X	X	X	X	X		X	" "	3/32	36	268–9654	"	" "	
X	X	X	X	X	X	X		X	" "	⅛	36	247–2982	"	" "	
X	X	X	X	X	X	X		X	" "	3/16	36	247–2983	"	" "	
X	X	X	X	X	X	X		X	" "	¼	36	255–8942	"	" "	
X	X	X	X	X	X	X		X	87Mg, 9A1, 2Zn	3/32	36	204–3280	MIL–R–6944, Cl AZ92A		Magnesium-aluminum-zinc alloys
X	X	X	X	X	X	X		X	"	⅛	36	204–3203	"	" "	
X	X	X	X	X	X	X		X	"	3/16	36	262–4285	"	" "	
X	X	X	X	X	X	X		X	"	¼	36	204–3279	"	" "	

Table VI. Brazing Alloys

Temps		Chemistry						Dimensions							
Melt	Braze	Copper	Silver	Zinc	Cadm	Phos	Nickel	Diam	Lgt	Wide	Thk	Co Sp Pk Lb Oz	FSC 3439 FIIN	Identifying Reference	Use
1250	1370	30	45	27						¾	.003	1 oz pkg	238–3077	MIL–B–15395, Gr 1	Small delicate parts—OK for dissimilar metals
1280	1325	20	65	17					A/A	¾	.003		247–6926	" Gr 2	
1160	1175	16	50	18	19				12	¼	.030		262–4186	MIL–B–15395, Gr 4	Brazing of dissimilar metals
1125	1145	16	45	18	25			1/16				1 oz Coil	294–7752	MIL–B–15395, Gr 7	Ni-Cu alloys-carbon & alloy steels-dissimilar metals
1300	1400	80	15			5			20	1/16	.050		141–8707	QQ–B–650, Cl CuP–5	Copper & copper alloys only—not for ferrous metals—joint clearance of .003 to .005
"	"	80	15			5			20	⅛	.050		188–6982	" "	
"	"	80	15			5			20	1½	.050		294–7753	" "	
"	"	80	15			5			36	⅛	⅛		204–2555	" "	
1430	1500	45	20	37						¾	.003	1 oz pkg	247–6927	QQ–S–561, Cl 0	Brazing-joint has high physical properties

Table VI. Brazing Alloys—Continued

Temps		Chemistry						Dimensions				Co Sp Pk Lb Oz	FSC 3439 FIIN	Identifying Reference	Use
Melt	Braze	Copper	Silver	Zinc	Cadm	Phos	Nickel	Diam	Lgt	Wide	Thk				
1250	1370	30	45	27				1/16				1½ oz Coil	224-3573	QQ-S-561, Cl 1	General silver soldering
1200	1300	80	15			5			20	1/16	.050		224-3560	QQ-S-561, Cl 3	Copper & copper alloys only—not for ferrous metals
1160	1175	15	50	17	18			1/32				1 oz Coil	184-8952	QQ-S-561, Cl 4	Brazing on dissimilar metals
1160	1175	15	50	17	18			1/16				1 lb Spool	184-8951	" "	
1195	1270	16	50	17	17		3	3/32				1 lb Coil	224-3561	QQ-S-561, Cl 5	Fillet joints & brazing carbide tool tips to tool

Table VII. Soldering Materials

Temp	Chemistry							Form		Dimensions					(FSC 3439) FIIN	Identifying References	Use
Flow Deg F.	Tin	Lead	Zinc	Antimony	Bismuth	Silver	Solid	Cored (Plastic or Dry) Acid	Cored (Plastic or Dry) Rosin	Dia	Length	Wide	Thk	Spool or Bar Weight			
490	30	67		2							14	¼	¼		224-3577	QQ-S-571, SN-30, BS	Dents & seams-automoti
490	30	67		2							14	⅝	⅜		247-6970	" " "	
460	40	60									14	⅝	⅜		247-6968	" SN-20, "	Dip & wiping solder
460	40	60									(Any shape)			1# bar	247-6921	" SN-40, "	
420	50	50									(Any shape)			1¼ # bar	163-4347	" SN-50, "	Sweated joint-cop, CI, S
375	60	40									14	⅝	⅜		254-8437	" SN-60, "	Elec con & coating
475	35	60		2							5½	2	1½		247-6969	" SN-35, IS	Plumbers wiping solder
260	25	38			37						14	¼	¼		239-8506	(L.B. ALLEN Co, "BISMUTH-LEAD")	Low temp melt application
570	10	87				2			Pla	1/16				1# spool	265-7102	QQ-S-571, SN-10, WRP2	Electrical con-hi-temp
460	40	60							Pla	.090				1# spool	188-6988	" SN-40, WRAP3	Dip & wiping solder
460	40	60						Pla		3/32				5# spool	188-6986	" " WACP6	
460	40	60						Pla		3/32				1# spool	224-3575	" " WACP3	
460	40	60						Pla		⅛				1# spool	184-8960	" " WACP6	
460	40	60							Pla	⅛				1# spool	243-1882	" " WRP3	
460	40	60					X			⅛				5# spool	247-6967	" " WS	
420	50	50					X			1/16				5# spool	141-8244	" SN-50, WS	Sweated joint-cop, CI, S
420	50	50							Pla	1/16				1# spool	640-2404	" " WRAP3	
420	50	50							Pla	.090				1# spool	184-8953	" " "	
460	40	60							Pla	1/16				1# spool	243-1888	" SN-40, WRP2	
420	50	50							Pla	3/32				1# spool	727-0489	" SN-50, "	
420	50	50					X			⅛				1# spool	239-8505	" " WS	

375	60	40						Pla	1/32				1# spool	555–4629	" SN–60, WRAP3	Electrical connections coating
375	60	40						Dry	1/16				5# spool	163–4351	" " WRD3	
375	60	40							3/32				5# spool	224–3567	" " WRAP3	
375	60	40						Pla	⅛				1# spool	273–2536	" " WRP2	
375	60	40					Pla		.162				1# spool	254–8439	" " WACP3	
475	35	60		2			Pla				3/16	⅛	5# spool	224–3562	" SN–35, RACP6	Plumbers wiping solder
375	60	40				X				6 1/16	7/16	.004	1# spool	524–0360	" SN–60, RS	
500	35	60	4			X			⅛				1# spool	528–9616	MIL–S–12204, type 1, comp A	Aluminum & aluminum alloy
N/A	20								(Paste solder-2 oz tube)					255–8948	(L.B. ALLEN Co. "SOFT-SOLDER–SN20")	
N/A	(Pla-alum)								(Paste " 5½ oz tube)					726–9822	(WOODHILL CHEMICAL Co. "P–AL")	

Table VIII. Flux, Welding, Brazing, and Soldering

Process	Form					Mesh Size	Unit of Issue	(FSC 3439) FIIN	Identifying References	Use	Type of Solder used with (Solder Flux only)
	Liquid	Paste	Stick	Powder	Granular						
Gas welding				X		80	1 lb	250–2645	MIL–F–7516, C1 2	Heat resisting steels	
" "				X		100	4 oz	250–2646	MIL–F–6939	Aluminum	
" "				X		100	4 oz	250–2647	MIL–F–6943	Magnesium	
" "				X		80	1 lb	255–4580	MIL–F–16136, type C	Cast iron	
" "		X					5 lb	255–9940		Cast iron & corrosion-resistant	
Gas & arc				X		80	1 lb	255–4577	MIL–F–16136, type A, C1 1	Copper	
Arc-welding					X	60	100 lb	068–5058	MIL–F–18251, A760	Steel	
" "				X		60	100 lb	200–1581	MIL–F–18251, 840	Steel	
Arc & forge				X		80	5 lb	752–7819	MIL–F–16136, type A, C1 1	Copper	
Brazing				X			1 lb	255–4572	(ALCOA #33)	Aluminum	
"		X					1 lb	640–3713	O–F–499, type B	All except aluminum-bronze	
Soldering	X						4 oz	250–2629	O–F–506, type 2, form B	Heat resisting steel	Sn–Pb
"	X						4 oz	250–2635	O–F–506, type 1, form B	All except aluminum & heat resisting alloys	Sn–Pb
"	X							252–4568	MIL–F–6939	Aluminum & Copper	Alum
"	X						1 gal	276–9952	O–F–506, type 1, form B	All except aluminum & heat resisting alloys	Sn–Pb
"		X					4 oz	250–2633	O–F–506, type 1, form A		Sn–Pb
"		X					2 oz	252–0573	O–F–506, type 1, form A		Sn–Pb
"		X					¼ lb	255–4566	O–F–506, type 1, form A		Sn–Pb
"		X					2 oz	252–4571	O–F–506, type 1, form A		Sn–Pb
"		X					2 oz	260–1264	O–F–506, type 1, form A		Sn–Pb
"		X					1 oz	268–9466		Gold, platinum, & silver	Silver
"		X					8 oz	288–0868	O–F–499, type B	All except aluminum-bronze	Ag–Cu
"		X					2 oz	529–0621	O–F–506, type 1, form A	All except aluminum & heat resisting alloys	Sn–Pb
"					X		¼ lb	640–2776	(L.B. ALLEN Co. "Soldering Salts")	All metals except aluminum	Sn–Pb
"			X				¼ lb	270–6050	MIL–F–12784, Comp IC–3	Lead joints of telephone cable splices (see TM 11–372)	Sn–Pb

Table IX. Carbon Blocks, Rods and Paste

Form	Measurements	Identifying Reference	(FSC 3439) FIIN	Use
Carbon Block	¼ T, 6W, 12L	MIL–C–1143	262–4158	Block, plug, or dike to restrict flow of molten metal
" "	½ T, 6W, 12L	"	262–4159	
" "	1T, 6W, 12L	"	262–4163	
Carbon Rod	¼ diam, 12 long	MIL–C–1143	262–4160	Block, plug, or dike to restrict flow of molten metal
" "	½ " "	"	262–4161	
" "	⅝ " "	"	262–4164	
" "	¾ " "	"	262–4162	
" "	⅞ " "	"	262–4165	
" "	1¼ " "	"	262–4166	
" "	1½ " "	"	262–4167	
" "	2 " "	"	262–4168	
Carbon Paste	5 lb pail	MIL–C–1143	255–9943	Block, plug, or dike to restrict flow of molten metal

APPENDIX E

MISCELLANEOUS DATA

Table I. Temperature Ranges for Processing Metals

Process	Temperature range (Deg F.)
Joining	
temperature).	
BRAZING (Copper and copper	1,300 to 2,150
BRAZING (Silver alloys, low	1,000 to 1,600
alloys high temperature).	
FORGING	1,700 to 2,150
SOFT SOLDERING	300 to 700
WELDING (Ferrous metals)	1,800 to 2,700
WELDING (Nonferrous metals)	600 to 2,200
Hardening	
CARBON STEEL	1,350 to 1,550
ALLOY STEEL	1,400 to 1,850
HIGH-SPEED STEEL	2,150 to 2,400
Tempering	
CARBON STEEL	300 to 1,050
ALLOY STEEL	300 to 1,300
HIGH-SPEED STEEL	350 to 1,100

Table II. Combustion Constants of Fuel Gases

Name of gas	Heat value Btu per cu ft	Flame temp. with oxygen (Deg F.)
ACETYLENE	1,433 net	6,300
BUTANE	2,999 net	5,300
CITY GAS	300 to 800 net	4,600
COKE OVEN GAS	500 to 550 net	4,600
ETHANE	1,631 net	5,100
ETHYLENE	1,530 net	5,100
HYDROGEN	275.1 net	5,400
METHANE	913.8 net	5,000
NATURAL GAS	800 to 1,200 net	4,600

Table III. Melting Points of Metals or Alloys

Metal or alloy	Melting point (Deg F.)
ALUMINUM CAST (8-PERCENT	1,175
COPPER).	
ALUMINUM, PURE	1,220
ALUMINUM (5-PERCENT SILICON)	1,118
BRASS	1,625 to 1,675
BRONZE, MANGANESE	1,600
BRONZE, NAVAL	1,625
BRONZE, PHOSPHOR	1,830 to 1,922
BRONZE, TOBIN	1,625
CHROMIUM	2,740
COPPER	1,981
IRON, CAST	2,200 to 2,500
IRON, MALLEABLE	2,300
IRON, PURE	2,786
IRON, WROUGHT	2,900
LEAD	620
MANGANESE	2,246
MAGNESIUM	1,200
MOLYBDENUM	4,532
MONEL METAL	2,480
NICKEL	2,646
NICKEL SILVER (18-PERCENT	1,955
NICKEL).	
SILVER, PURE	1,762
SILVER SOLDERS (50-PERCENT	1,175
SILVER).	
SOLDER (50–50)	437
STEEL, HARD (0.40–0.70-PERCENT	2,500 to 2,550
CARBON).	
STEEL, LOW-CARBON (MAXIMUM	2,700 to 2,750
0.15-PERCENT CARBON).	
STEEL, MEDIUM (0.15–0.40-	2,600
PERCENT CARBON).	
STEEL, MANGANESE	2,450
STEEL, CAST	2,600 to 2,750
STEEL, NICKEL (3.5-PERCENT	2,600
NICKEL).	
STAINLESS STEEL (18–8)	2,550
STAINLESS STEEL, LOW-	2,640
CARBON (18–8).	
TANTALUM	5,160
TIN	450
TITANIUM	3,270
TUNGSTEN	6,152
VANADIUM	3,182
WHITE METAL	430 to 490
ZINC	786

Table IV. Temper and Heat Colors

Temper color	Temperature (Deg. F.)	Uses
Faint straw	400	
Straw	440	Scrapers, hammer faces, lathe, shaper, and planer tools.

Temper color	Temperature (Deg. F.)	Uses
Dark straw	460	Milling cutters, taps, and dies.
Very deep straw	480	Punches, dies, knifes, and reamers.
Brown yellow	500	Stone cutting tools and twist drills.
Bronze or brown purple.	520	Drift pins.
Peacock or full purple.	540	Augers, cold chisels for steel.
Bluish purple	550	Axes, cold chisels for iron, screwdrivers, and springs.
Blue	570	Saws for wood.
Full blue	590	
Very dark blue	600	
Light blue	640	

Table V. Heat Colors With Approximate Temperature

Color	Temperature (Deg F.)
White	2,200
Light yellow	1,975
Lemon	1,825
Orange	1,725
Salmon	1,650
Bright red	1,550
Bright cherry or dull red	1,450
Cherry or full red	1,375
Medium cherry	1,250
Dark cherry	1,175
Blood red	1,050
Faint red	900
Faint red (visible in dark)	750

Table VI. Stub Steel Wire Gages

Ga. No.	Dia.	Ga. No.	Dia.	Ga. No.	Dia.	Ga. No.	Dia.
7/0	.----	16	.175	38	.101	60	.039
6/0	.----	17	.172	39	.099	61	.038
5/0	.----	18	.168	40	.097	62	.037
4/0	.----	19	.164	41	.095	63	.036
3/0	.----	20	.161	42	.092	64	.035
2/0	.----	21	.157	43	.088	65	.033
0	.----	22	.155	44	.085	66	.032
1	.227	23	.153	45	.081	67	.031
2	.219	24	.151	47	.077	68	.030
3	.212	25	.148	48	.075	69	.029
4	.207	26	.146	49	.072	70	.027
5	.204	27	.143	50	.069	71	.026
6	.201	28	.139	51	.066	72	.024
7	.199	29	.134	52	.063	73	.023
8	.197	30	.127	53	.058	74	.022
9	.194	31	.120	54	.055	75	.020
10	.191	32	.115	55	.050	76	.018
11	.188	33	.112	56	.045	77	.016
12	.185	34	.110	57	.042	78	.015
13	.182	35	.108	58	.041	79	.014
14	.180	36	.106	59	.040	80	.013
15	.178	37	.103				

Table VII. Standard Gage Abbreviations

Standard Gage	Abbreviation
American Wire Gage	AWG
Brown & Sharpe Gage	B&S
American Steel Wire Gage	Stl WG
National Wire Gage	NATL
Roebling Wire Gage	ROEBL
Washburn & Moen Gage	W&M
Standard Wire Gage	SWG
English Standard Gage	SWG
English Legal Standard Gage	SWG
Imperial Wire Gage	IWG
British Imperial Wire Gage	IWG
British Standard Wire Gage	SWG
New British Standard Gage	NBS
Olde English Gage	OEG
London Wire Gage	Lon WG
1914 Birmingham Gage	BG
Birmingham Wire Gage	BWG
Stub Iron Wire Gage (Peters Stubbs)	STUB IRON GA
Stub Steel Wire Gage	STUB STL
U.S. Standard Gage	US STD

NOTE: Grouped gages are identical.

Table VIII. Metal Gage Comparisons

Gage No.	U.S. Standard Gage (Obsolete)	Manufacturer's Standard	American Wire (AWG)	American Steel Wire (StlWG)	Standard Wire (SWG)	Olde English (OEG)	1914 Birmingham (BG)	Birmingham Wire (BWG)
7/0	.5000	.-----	.-----	.4900	.5000	.-----	.6666	.----
6/0	.4687	.-----	.5800	.4600	.4640	.-----	.6250	.----
5/0	.437	.-----	.5165	.4300	.4320	.-----	.5883	.----
4/0	.4063	.-----	.4600	.3938	.4000	.4540	.5416	.454
3/0	.3750	.-----	.4096	.3625	.3720	.4250	.5000	.425

Table VIII. Metal Gage Comparisons—Continued

Gage No.	U.S. Standard Gage (Obsolete)	Manufacturer's Standard	American Wire (AWG)	American Steel Wire (StlWG)	Standard Wire (SWG)	Olde English (OEG)	1914 Birmingham (BG)	Birmingham Wire (BWG)
2/0	.3437	-----	.3648	.3310	.3480	.3800	.4452	.380
0	.3125	-----	.3249	.3065	.3240	.3400	.3964	.340
1	.2813	-----	.2893	.2830	.3000	.3000	.3532	.300
2	.2656	-----	.2576	.2625	.2760	.2840	.3147	.284
3	.2500	.2391	.2294	.2437	.2520	.2590	.2804	.259
4	.2344	.2242	.2043	.2253	.2320	.2380	.2500	.238
5	.2188	.2092	.1819	.2070	.2120	.2200	.2225	.220
6	.2031	.1943	.1620	.1920	.1920	.2030	.1981	.203
7	.1875	.1793	.1443	.1770	.1760	.1800	.1764	.180
8	.1719	.1644	.1285	.1620	.1600	.1650	.1570	.165
9	.1563	.1495	.1144	.1483	.1440	.1480	.1398	.148
10	.1406	.1345	.1019	.1350	.1280	.1340	.1250	.134
11	.1250	.1196	.0907	.1205	.1160	.1200	.1113	.120
12	.1094	.1040	.0808	.1055	.1040	.1090	.0991	.109
13	.0937	.0897	.0720	.0915	.0920	.0950	.0882	.095
14	.0781	.0747	.0641	.0800	.0800	.0830	.0785	.083
15	.0703	.0673	.0571	.0720	.0720	.0720	.0699	.072
16	.0625	.0598	.0508	.0625	.0640	.0650	.0625	.065
17	.0563	.0538	.0453	.0540	.0560	.0580	.0556	.058
18	.0500	.0478	.0403	.0475	.0480	.0490	.0495	.049
19	.0438	.0418	.0359	.0410	.0400	.0400	.0440	.042
20	.0373	.0359	.0320	.0348	.0360	.0350	.0392	.035
21	.0344	.0329	.0284	.0318	.0320	.0315	.0349	.032
22	.0313	.0299	.0254	.0286	.0280	.0295	.0312	.028
23	.0281	.0269	.0226	.0258	.0240	.0270	.0278	.025
24	.0250	.0239	.0201	.0230	.0220	.0250	.0248	.022
25	.0219	.0209	.0179	.0204	.0200	.0230	.0220	.020
26	.0188	.0179	.0159	.0181	.0180	.0205	.0196	.018
27	.0172	.0184	.0142	.0173	.0164	.0187	.0174	.016
28	.0156	.0149	.0126	.0162	.0148	.0165	.0156	.014
29	.0141	.0135	.0113	.0150	.0136	.0155	.0139	.013
30	.0125	.0120	.0100	.0140	.0124	.0137	.0123	.012
31	.0109	.0105	.0089	.0132	.0116	.0122	.0110	.010
32	.0102	.0097	.0080	.0128	.0108	.0112	.0098	.009
33	.0094	.0090	.0071	.0118	.0100	.0102	.0087	.008
34	.0086	.0082	.0063	.0104	.0092	.0095	.0077	.007
35	.0078	.0075	.0056	.0095	.0084	.0090	.0069	.005
36	.0070	.0067	.0050	.0090	.0076	.0075	.0061	.004
37	.0066	.0064	.0045	.0085	.0068	.0065	.0054	----
38	.0063	.0060	.0040	.0080	.0060	.0057	.0048	----
39	-----	-----	.0035	.0075	.0052	.0050	.0043	----
40	-----	-----	.0031	.0070	.0048	.0045	.0039	----
41	-----	-----	.0028	-----	.0044	-----	.0034	----
42	-----	-----	.0025	-----	.0040	-----	.0031	----
43	-----	-----	.0022	-----	.0036	-----	.0027	----
44	-----	-----	.0020	-----	.0032	-----	.0024	----
45	-----	-----	.0018	-----	.0028	-----	.0021	----
46	-----	-----	.0016	-----	.0024	-----	.0019	----
47	-----	-----	.0014	-----	.0020	-----	.0017	----
48	-----	-----	.0012	-----	.0016	-----	.0015	----
49	-----	-----	.0010	-----	.0012	-----	.0013	----
50	-----	-----	.00098	-----	.0010	-----	.0012	----

Table IX. Sheet Metal Gage

Sheet Copper		Sheet Zinc		Tin Plate		Stainless Steel		
Oz. Per Sq. Ft.	Thickness	Gage No.	Thickness	Gage No.	Thickness	Gage No.	Average Sheet Thickness 4 X 8 Foot	Average Sheet Thickness 6 X 12 Foot
		28	1.000			6	*	*
96 oz	.1296	27	.500	6X	.28			
88 oz	.1188	26	.375	4X	.022	7	.187	*
80 oz	.1080	25	.250	3X	.019	8	.165	*
72 oz	.0972	24	.125	2X	.017	9	*	*
64 oz	.0864	23	.100	1X	0.16	10	.135	.141
56 oz	.756	22	.090	1C	0.13	11	.120	.125
52 oz	.0702	21	.080			12	.105	.109
48 oz	.0648	20	.070			13	.090	.094
44 oz	.0594	19	.060			14	.075	.078
40 oz	.0540	18	.055			15	*	*
36 oz	.0486	17	.050			16	.060	.063
32 oz	.0432	16	.045			17	*	*
28 oz	.0378	15	.040			18	.048	.050
26 oz	.0351	14	.036			19	.042	.044
24 oz	.0324	13	.032			20	.036	.038
20 oz	.0270	12	.028			21	*	*
18 oz	.0243	11	.024			22	.030	.031
16 oz	.0216	10	.020			23	*	*
14 oz	.0189	9	.018			24	.024	.025
13 oz	.0175	8	.016			25	*	*
12 oz	.0162	7	.014			26	.018	.019
10 oz	.0135	6	.012			27	*	*
9 oz	.0121	5	.010			28	.015	.016
8 oz	.0108	4	.008					
7 oz	.0094	3	.006					
6 oz	.0081							
5 oz	.0067							
4 oz	.0054							

* Not normally manufactured in these gages.

Table X. Elements and Related Chemical Symbols

Chemical Symbol	Elements	Chemical Symbol	Element
A	Argon	Cr	Chromium
Ac	Actinium	Cs	Cesium
Ag	Silver	Cu	Copper
Al	Aluminum	Dr	Dysprosium
Am	Americium	E	Einsteinium
As	Arsenic	Er	Erbium
At	Astatine	Eu	Europium
Au	Gold	F	Fluorine
B	Boron	Fe	Iron
Ba	Barium	Fm	Fermium
Be	Beryllium	Fr	Francium
Bi	Bismuth	Ga	Gallium
Bk	Berkelium	Gd	Gadolinium
Br	Bromine	Ge	Germanium
C	Carbon	H	Hydrogen
Ca	Calcium	He	Helium
Cd	Cadmium	Hf	Hafnium
Ce	Cerium	Hg	Mercury
Cf	Californium	Ho	Holmium
Cl	Chlorine	I	Iodine
Cm	Curium	In	Indium
Co	Cobalt	Ir	Iridium

Chemical Symbol	Elements	Chemical Symbol	Element
K	Potassium	Pd	Palladium
Kr	Krypton	Pm	Promethium
La	Lanthanum	Po	Polonium
Li	Lithium	Pr	Praseodymium
Lu	Lutetium	Pt	Platinum
Lw	Lawrencium	Pu	Plutonium
Mg	Magnesium	Ra	Radium
Mn	Manganese	Rb	Rubidium
Mo	Molydbenum	Re	Rhenium
Mr	Mendelevium	Rh	Rhodium
N	NitrogenN	Rn	Radon
Na	Sodium	Ru	Ruthenium
Nb	Niobium	S	Sulphur
Nd	Neodymium	Sb	Antimony
Ne	Neon	Sc	Scandium
Ni	Nickel	Se	Selenium
No	Nobelium	Si	Silicon
Np	Neptunium	Sm	Samarium
O	Oxygen	Sn	Tin
Os	Osmium	Sr	Strontium
P	Phosphorus	Ta	Tantalum
Pa	Protactinium	Tb	Terbium
Pb	Lead	Tc	Technetium

Chemical Symbol	Elements	Chemical Symbol	Element
Te	Tellurium	V	Vanadium
Th	Thorium	W	Tungsten
Ti	Tibanium	Xe	Xenon
Tl	Thallium	Y	Yttrium
Tm	Thulium	Yb	Ytterbium
U	Uranium	Zn	Zinc
		Zr	Zirconium

Note: There are 92 basic elements—those which occur naturally. All other elements are manmade, and exist for only short periods of time.

Table XI. Decimal Equivalents of Fractions of an Inch

Inch fraction	Decimal equivalent	Inch fraction	Decimal equivalent
1/64	0.015625	33/64	0.515625
1/32	0.03125	17/32	0.53125
3/64	0.046875	35/64	0.546875
1/16	0.0625	9/16	0.5625
5/64	0.078125	37/64	0.578125
3/32	0.09375	19/32	0.59375
7/64	0.109375	39/64	0.609375
⅛	0.125	⅝	0.625
9/64	0.140625	41/64	0.640625
5/32	0.15625	21/32	0.65625
11/64	0.171875	43/64	0.671875
3/16	0.1875	11/16	0.6875
13/64	0.203125	45/64	0.703125
7/32	0.21875	23/32	0.71875
15/64	0.234375	47/64	0.734375
¼	0.25	¾	0.75
17/64	0.265625	49/64	0.765625
9/32	0.28125	25/32	0.78125
19/64	0.296875	51/64	0.796875
5/16	0.3125	13/16	0.8125
21/64	0.328125	53/64	0.828125
11/32	0.34375	27/32	0.84375
23/64	0.359375	55/64	0.859375
⅜	0.375	⅞	0.875
25/64	0.390625	57/64	0.890625
13/32	0.40625	29/32	0.90165
27/64	0.421895	59/64	0.921875
7/16	0.4375	15/16	0.9375
29/64	0.453125	61/64	0.953125
15/32	0.46875	31/32	0.96875
31/64	0.484375	63/64	0.984375
½	0.5	1	1.0

Table XII. Inches and Equivalents in Millimeters (1/64 Inch to 100 Inches)

Inches	MM.	Inches	MM.	Inches	MM.
1/64	.397	⅞	22.225	48	1219.2
1/32	.794	57/64	22.622	49	1244.6
3/64	1.191	29/32	23.019	50	1270.0
1/16	1.588	59/64	23.416	51	1295.4
5/64	1.984	15/16	23.813	52	1320.8
3/32	2.381	61/64	24.209	53	1346.2
7/64	2.778	31/32	24.606	54	1371.6
⅛	3.175	63/64	25.003	55	1397.0
9/64	3.572	1	25.400	56	1422.4
5/32	3.696	2	50.8	57	1447.8
11/64	4.366	3	76.2	58	1473.2
3/16	4.763	4	101.6	59	1498.6
13/64	5.159	5	127.0	60	1524.0
7/32	5.556	6	152.4	61	1549.4
15/64	5.953	7	177.8	62	1574.8
¼	6.350	8	203.2	63	1600.2
17/64	6.747	9	228.6	64	1625.6
9/32	7.144	10	254.0	65	1651.0
19/64	7.540	11	279.4	66	1676.4
5/16	7.938	12	304.8	67	1701.8
21/64	8.334	13	330.2	68	1727.2
11/32	8.731	14	355.6	69	1752.6
23/64	9.128	15	381.0	70	1778.0
⅜	9.525	16	406.4	71	1803.4
25/64	9.922	17	431.8	72	1828.8
13/32	10.319	18	457.2	73	1854.2
27/64	10.716	19	482.6	74	1879.6
7/16	11.113	20	508.0	75	1905.0
29/64	11.509	21	533.4	76	1930.4
15/32	11.906	22	558.8	77	1955.8
31/64	12.303	23	584.2	78	1981.2
½	12.700	24	609.6	79	2006.6
33/64	13.097	25	635.0	80	2032.0
17/32	13.494	26	660.4	81	2057.4
35/64	13.891	27	685.8	82	2082.8
9/16	14.288	28	711.2	83	2108.2
37/64	14.684	29	736.6	84	2133.6
19/32	15.081	30	762.0	85	2159.0
39/64	15.478	31	787.4	86	2184.4
⅝	15.875	32	812.8	87	2209.8
41/64	61.272	33	838.2	88	2235.2
21/32	16.669	34	863.6	89	2260.6
43/64	17.066	35	889.0	90	2286.0
11/16	17.463	36	914.4	91	2311.4
45/64	17.859	37	939.8	92	2336.8
23/32	18.256	38	965.2	93	2362.2
47/64	18.653	39	990.6	94	2387.6
¾	10.050	40	1016.0	95	2413.0
49/64	10.447	41	1041.4	96	2438.4
25/32	19.844	42	1066.8	97	2463.8
51/64	20.241	43	1092.2	98	2489.2
13/16	20.638	44	1117.6	99	2514.6
53/64	21.034	45	1143.0	100	2540.0
27/32	21.431	46	1168.4		
55/64	21.828	47	1193.8		

INDEX

	Paragraphs	Page
A		
Alloy steel, welding and brazing of	6–18	92
Alloys used for hard surfacing	7–30	160
Alternating-current arc welding machines	5–20	64
Aluminum, standard designation for	2–6	13
Aluminum brazing	6–23	96
Aluminum soldering	6–24	97
Aluminum welding (arc)	7–20	139
Aluminum welding (oxy-acety)	6–22	94
Annealing (steel)	2–12	15
Application, forge welding	8–13	168
Arc welding, description of	3–2	19
Arc welding, equipment and accessories	5–1	49
Alternating current arc welding machines	5–20	64
Direct current arc welding machines	5–19	64
Electrodes and their use	5–23	69
Other welding equipment	5–22	65
Welding gun	5–21	65
Arc welding, safety precautions	4–1	39
Electric circuits	4–6a	43
Welding machines	4–7	43
Armor plate, cutting of	9–21	177
Armor plate, identification of	9–20	177
Armor plate, properties of	9–18	176
Armor plate, rivet joints, strengthening of	9–24	192
Armor plate, types of	9–19	176
Armor plate, welding and cutting	9–17	175
Cutting	9–21	177
Hardface, welding of	9–23	186
Homogeneous, welding of	9–22	179
Identification of	9–20	177
Properties of	9–18	176
Strengthening riveted joints	9–24	192
Types of	9–19	176
Artillery equipment fabrication, metals used for	9–15	175
Artillery materiel, repairs on	9–16	175
Automotive equipment, welding of	9–7	171
Automotive exhaust method of cleaning containers	4–14	45
B		
Backhand welding	6–5	83
Basic welding symbols	11–6	212
Bead welding (arc)	7–5	121
Beforehand welding	6–4	83
Bend test, back	10–8	204
Bend test, free	10–7	202
Bend test, guided	10–6	202
Bend test, nick	10–9	204
Brass and bronze welding (oxy-acet)	6–28	101
Brass and bronze welding (arc)	7–21	146
Brazing, description of	3–6	21
Brazing gray cast iron	6–20	93
Brazing malleable iron	6–21	93
Braze welding (oxy-acety)	6–27	99
Bronze surfacing	6–36	107
Butt joint, description of	3–14	25
C		
Carbonizing compound for surface hardening, use of	2–16	16
Cast iron, welding and brazing of (oxy-acet)	6–19	92
Cast iron, welding of (arc)	7–19	138
Categories of metals	2–3	6
Ferrous metals	2–3b	6
Nonferrous metals	2–3c	10
Chrome molybdenum alloy steel, welding and brazing of	6–15	90
Chrome nickel steel, welding and brazing of	6–16	91
Cleaning of containers having held combustibles	4–11	45
Construction lines (symbols)	11–13	218
Controlling contraction and expansion in castings	3–24	34
Controlling contraction in sheet metal	3–23	32
Copper brazing (oxy-acet)	6–26	99
Copper, standard designation for	2–9	14
Copper, welding of (arc)	7–22	146
Copper welding (oxy-acet)	6–25	98
Corner joint, description of	3–15	25
Cutting and hard surfacing with the electric-arc:		
Alloys used for hard surfacing	7–30	160
Cutting	7–26	158
Hard surfacing	7–28	159
Hard surfacing procedure	7–31	160
Metal cutting with electric-arc	7–27	158
Metals that can be hard surfaced	7–29	159
Cutting and other uses of oxy-acetylene flame	6–39	109
Cutting steel and cast iron	6–40	109
Flame descaling	6–44	112
Flame hardening	6–41	111
Flame machining	6–45	112

	Paragraphs	Page
Flame softening and straightening	6–42	112
Flame strengthening	6–43	112
Metallizing	6–47	114
Underwater cutting	6–45	112
Cutting steel and cast iron	6–40	109
Cutting torch and other cutting equipment	5–16	61

D

Designation standards (metals):		
Standard designation for aluminum and aluminum alloys	2–6	13
Standard designation for copper and copper alloys	2–9	14
Standard designation for magnesium and magnesium alloys	2–8	14
Standard designation for steel	2–5	12
Standard designation for titanium	2–10	14
Standard temper designation for wrought aluminum and magnesium compositions	2–7	13
Direct-current arc welding machines	5–19	64
Drawing and quenching after carburizing	2–18	18
Drawing, parts of (print reading)	11–2	210

E

Edge joint, description of	3–16	26
Electric-arc welding of ferrous metals:		
Cast iron	7–19	138
High carbon steel	7–15	136
High hardness alloy steel	7–17	136
High yield strength, low alloy, structural steel	7–18	137
Low carbon steel	7–13	134
Medium carbon steel	7–14	135
Tool steel	7–16	136
Electric-arc welding of nonferrous metals:		
Aluminum welding	7–20	139
Brass and bronze welding	7–21	146
Copper welding	7–22	146
Magnesium welding	7–23	147
Nickel and monel welding	7–25	158
Titanium welding	7–24	149
Electric circuits, safety precautions	4–6	43
Electrodes and their use	5–22	65
Electrodes, classification of	5–23c	69
Electrodes, types of	5–23b	69
Elements of welding symbols	11–5	212
Explosion hazards, safety precautions	4–11	45
Extent of welding denoted by symbols	11–11	218
Electric arc, characteristics	7–1	116

F

Face hardened armor plate, welding of	9–23	186
Factors affecting the heat distribution area	7–11	134
Flame adjustment and flame types	6–3	80
Flame descaling	6–44	112
Flame hardening	6–41	109
Flame machining	6–45	112
Flame softening and straightening	6–42	112
Flame strengthening	6–43	112
Flash welding titanium	8–8	167
Flat positioning welding (arc)	7–6	121
Flat position welding, description of	3–21a	29
Flat position welding (oxy-acet)	6–7	84
Flow welding, description of	3–7	22
Forehand welding	6–4	83
Forges	5–26	77
Forge welding	8–12	168
Forge welding application	8–13	168
Forge welding, description of	3–5	21
Forging tools	5–27	78
Forms, records, and reports	1–2	3
Authorized forms	1–2b	3
Field reports of accidents	1–2c	3

G

Gas shielded arc welding, safety precautions	4–9	44
Cases	4–9a	44
Metal fumes	4–9d	44
Radiant energy	4–9b	44
Radio activity	4–9c	44
Gas welding, description of	3–4	21
Glossary of welding terms	12–1	233
Welding terms	12–3	233

H

Hardening (steel)	2–13	15
Hard face armor plate, welding of	9–23	186
Hard surfacing (arc)	7–28	159
Hard surfacing procedure (arc)	7–31	160
Hardness in arc welding	7–12	134
Heat source (torch)	2–20	18
Heat treatment of steel	2–11	14
High carbon steel, welding and brazing of (oxy-acet)	6–13	89
High carbon steel, welding of (arc)	7–15	136
High hardness alloy steel, welding of (arc)	7–17	136
High tensile low alloy steel, welding and brazing of (oxy-acet)	6–17	91
High yield strength, low alloy, structural steel, welding of	7–18	137
Homogeneous armor plate, welding of	9–22	179
Horizontal position welding (arc)	7–7	125
Horizontal position welding, description of	3–21b	31

I

Improper arc control	7–4	120
Induction welding, description of	3–9	22

L

Lap joint, descriptions of	3–17	26
Lead welding (oxy-acet)	6–34	106

	Paragraphs	Page
Location of welding symbols	11–12	218
Low carbon steel, welding and brazing of (oxy-acet)	6–11	89
Low carbon steel, welding of (arc)	7–13	134
M		
Magnesium brazing (oxy-acet)	6–30	103
Magnesium soldering	6–31	104
Magnesium, spot welding of	8–6	165
Magnesium, standard designation for	2–8	14
Magnesium, welding of (arc)	7–23	147
Magnesium, welding (oxy-acet)	6–29	102
Malfunction and corrections of torch	5–15	60
Mediums carbon steel, welding and brazing of (oxy-acet)	6–12	89
Medium carbon steel, welding of (arc)	7–14	135
Melt-thru welds, symbols for	11–26	225
Metallizing	6–47	114
Metal, categories of	2–3	6
Metal cutting with the electric-arc	7–27	158
Metal electrodes, description of	3–2a	19
Metal, properties of	2–2	5
Metals that can be hard surfaced	7–29	159
Methods of precleaning containers having held flammable liquids	4–13	45
MIG welding:		
Aluminum	7–20d, 7–20g	140, 144
Description of	3–2a(6)	19
Titanium	7–24c	152
Military material, testing of	10–2	201
Muffle jacket	2–19	18
Multilayer welding (oxy-acet)	6–6	83
Multipass weld, description of	3–12	24
N		
Nickel and monel welding (arc)	7–25	158
Nickel soldering	6–33	105
Nickel welding (oxy-acet)	6–32	105
O		
Operation of cutting equipment (oxy-acet)	5–17	63
Other welding equipment (oxy-acet)	5–22	65
Overhead position welding (arc)	7–9	129
Overhead position welding (oxy-acet)	6–9	86
Oxy-acetylene cutting equipment	5–1	49
Cutting torch and other cutting equipment	5–16	61
Operation of cutting equipment	5–17	63
Oxy-acetylene welding and cutting	6–1	80
Backhand welding	6–5	83
Beforehand welding	6–4	83
Flame adjustment and flame types	6–3	80
Flat position welding	6–7	84
Multilayer welding	6–6	83
Overhead position welding	6–9	86
Vertical position welding	6–8	85
Working pressure for welding operations	6–2	80
Oxy-acetylene welding, safety precautions	4–5	40
P		
Plug and spot welding symbols	11–22	221
Plug welding	9–25	192
Pipe welding procedure	9–28	197
Pipe welding process	9–27	196
Preparation for welding (pipe)	9–26	192
Positions welding, description of	3–21	29
Flat	3–21a	29
Horizontal	3–21b	31
Overhead	3–21d	31
Vertical	3–21c	31
Preparing containers for cleaning, safety precautions	4–12	45
Print reading and welding symbols	11–1	210
Arc spot and seam welds	11–23	222
Back and backing welds	11–25	225
Basic welding symbols	11–6	212
Construction lines	11–3	211
Construction of symbols	11–14	218
Dimensioning of intermittent fillet welds	11–19	221
Elements of welding symbols	11–5	212
Extent of welding denoted by symbol	11–11	218
Extent of fillet welds	11–17	221
Fillet welds	11–15	218
Flange welds	11–28	227
Flash or upset welds	11–32	232
Groove welds	11–24	223
Length of fillet welds	11–17	221
Location of weld symbols	11–12	218
Location of welds with respect to joint	11–8	215
Location significance of arrow	11–7	215
Melt-thru welds	11–26	225
Parts of drawings (print reading)	11–2	210
Plug and spot welding symbols	11–22	221
Projection welds	11–30	228
Reference and general notes	11–9	218
Resistance seam welds	11–31	230
Resistance spot welds	11–29	228
Size of fillet welds	11–16	221
Surface contour of fillet welds	11–21	221
Surfacing welds	11–27	226
Termination of intermittent fillet welding	11–20	221
Use of inch, degree, and pound marks	11–13	218
Weld all around and field symbols	11–10	218
Welding symbols	11–4	212
Procedure, pipe welding	9–28	197
Process, resistance welding	8–4	163
Properties of metals	2–2	5
Q		
Quenching after carburinzing	2–17	17
R		
Regulator malfunctions and corrections	5–14	59

	Paragraphs	Page
Repaired equipment, field testing of	10–8	201
Resistance welding, description of	8–8	22
Resistance welding process	8–3	163
Flash welding titanium	8–8	167
Process	8–4	163
Spot and seam welding titanium	8–7	166
Spot welding magnesium	8–6	165
Welding procedure	8–5	164
Resistance welding equipment	5–24	74

S

Safety precautions	4–1	39
Electric circuits	4–6	43
Fire hazards	4–3	40
Oxy-acetylene welding	4–5	40
Protection of eyes and skin	4–2	39
Protective clothing	4–2b	39
Protective equipment	4–2c	40
Protective screen	4–8	43
Ventilation	4–4	40
Welding machines	4–7	43
Safety precautions for containers that have held combustibles:		
Automotive exhaust method	4–14	45
Explosion hazards	4–11	45
Filling treatment	4–19	47
Hot chemical solution method	4–17	46
Marking of safe containers	4–18	47
Methods of precleaning containers	4–13	45
Preparing container for cleaning	4–12	45
Preparing container for welding, inert gas treatment	4–20	47
Steam method of cleaning	4–15	46
Water method of cleaning	4–16	46
Safety precautions for gas shielded arc welding:		
Potential hazards	4–9	44
Protective measures	4–10	44
Section of weld, definition of	3–11	22
Setting up welding equipment (oxy-acet)	5–12	58
Sheet metal, welding of	6–10a	87
Shutting down welding equipment (oxy-acet)	5–13	59
Silver (brazing) soldering	6–38	108
Soldering	6–37	107
Spot and seam welding titanium	8–7	166
Spot welding magnesium	8–6	165
Standard designation for aluminum and aluminum alloys	2–6	13
Standard designation for copper and copper alloys	2–9	14
Standard designation for magnesium and magnesium alloys	2–8	14
Standard designation for steel	2–5	12
Standard designation for titanium	2–10	14
Standard temper designation for wrought aluminum and magnesium compositions	2–7	13
Starting the arc	7–3	118
Stationary welding equipment	5–1	49
Steel, annealing of	2–12	15
Steel, general principles in welding	6–10c	88
Steel, hardening of	2–13	15
Steel, heat treatment of	2–11	14
Steel plate, welding of (oxy-acet)	6–10c	88
Steel, standard designations for	2–5	12
Steel, surface hardening	2–15	16
Steel, tempering of	2–14	15
Steel, welding of	6–10b	87
Stress relieving, description of	3–26	37
Stress relieving methods, description of	3–27	38
Surface hardening (steel)	2–15	16
Surface hardening, use of carburizing compound	2–16	16
Symbols, welding	11–4	212

T

Tables		
1. Standard steel and steel alloy number designations	2–5c	12
2. Standard aluminum and aluminum alloy designations	2–6d	13
3. Standard wrought aluminum and magnesium compositions temper designations	2–7b	13
4. Letters used to identify alloying elements in magnesium alloys	2–8a	14
5. Standard copper and copper alloy series designation	2–9	14
6. Time required in case hardening	2–16c(3)	17
7. Approximate reheating temperature after carburizing of SAE steel	2–18b	18
8. Preheating temperatures	3–27c	38
9. Oxy-acetylene cutting information	5–16d	61
10. Low pressure or injector type torch	6–2	80
11. Balance pressure torch	6–2	80
12. Approximate condition for gas welding or aluminum	6–22b(1)	94
13. Current settings for bare and lightly coated electrodes	7–2a	117
14. Current settings for mineral and cellulose electrodes	7–2b	117
15. Effect of maladjustment of welding current, voltage, and speed on bead characteristics	7–4a	120
16. Electrode numbers	7–18c	137
17. Electrodes in army supply system	7–18c	137
18. Suggested preheat temperatures	7–18e	137
19. Magnesium weld data	7–23d(6)	148
20. Magnesium stress relief data	7–23d-(12)	149
21. Recommended welding currents	7–34c	162
22. Magnesium spot weld data	8–6e	166
23. Commercially pure titanium spot weld data	8–7e	166

	Paragraphs	Page
24. Designation of welding process by letters	11–6c	212
25. Designation of cutting process by letters	11–6c	212
Tank repairs	9–13	173
Tee joint, description of	3–18	27
Temper designation, wrought aluminum and magnesium	2–7	13
Tempering (steel)	2–14	15
Terms, welding	12–3	233
Test, back bend	10–8	204
Test, fluorescent penetrant	10–15	207
Test, free bend	10–7	202
Test, gamma ray	10–14	207
Test, grind bend	10–6	202
Test, hardness	10–16	209
Test, hydrostatic	10–11	207
Test, magnetic particle	10–12	207
Test, nick bend	10–9	204
Test, physical	10–4	202
Test, tensile strength	10–10	206
Test, welding, acid etch	10–5	202
Test, welding, military materiels	10–2	201
Test, welds and equipment (field)	10–3	201
Test, X-ray	10–13	207
Testing of welds	10–1	201
Acid etch test	10–5	202
Back bend test	10–8	204
Field testing of welds and equipment	10–3	201
Fluorescent penetrant test	10–15	207
Free bend test	10–7	202
Gamma ray test	10–14	207
Grind bend test	10–6	202
Hardness test	10–16	209
Hydrostatic test	10–11	207
Magnetic particle test	10–12	207
Nick bend test	10–9	204
Physical testing	10–4	202
Tensile strength test	10–10	206
Testing army military materiel	10–2	201
X–ray test	10–13	207
Thermit welding	8–9	167
Thermit welding, description of	3–3	21
Thermit welding equipment	5–25	76
Thermit welding, procedure	8–11	168
TIG welding:		
Aluminum	7–20e, 7–20f	142, 144
Copper	7–22c	147
Description of	3–2a(5)	19
Magnesium	7–23e	148
Titanium	7–24c	152
Thermit welding, purpose of	8–10	167
Titanium, flash welding of	8–8	167
Titanium, spot and seam welding of	8–7	166
Titanium, standard designation for	2–10	14
Titanium, welding of (arc)	7–24	149
Tool steel, welding and brazing of (oxy-acet)	6–14	90
Tool steel, welding of (arc)	7–16	136
Torch malfunctions and corrections	5–15	60
Tractor repairs	9–12	173
Truck components, welding of	9–11	172
Types of weld joints, description of:		
Butt	3–14	25
Corner	3–15	25
Edge	3–16	26
Lip	3–17	26
Tee	3–18	27
Types of welds, description of	3–19	28
Underwater cutting and welding with the electric-arc:		
Underwater cutting	7–32a	161
Underwater cutting technique	7–33	161
Underwater welding	7–32b	161
Underwater welding technique	7–34	162
Underwater position welding (arc)	7–8	127
Underwater position welding (oxy-acet)	6–8	85
V		
Vertical position welding (arc)	6–8	85
Vertical position welding (oxy-acet)	7–8	127
W		
Weld-all-around and field symbols	11–10	218
Weld symbols, location of	11–12	218
Weld, types of	3–19	28
Fillet welds	3–19e	28
Groove welds	3–19a	28
Plug welds	3–19c	28
Seam welds	3–19f	28
Slot welds	3–19d	28
Spot welds	3–19g	28
Surface welds	3–19b	28
Upset welds	3–19h	29
Welding and brazing ferrous metals (oxy-acet)	6–10	87
Brazing gray cast iron	6–20	93
Brazing malleable iron	6–21	93
Cast iron	6–19	92
Chrome nickel corrosive resistant steel	6–16	91
Chrome molybdenium alloy steel	6–15	90
High carbon steel	6–13	89
High tensile low allow steel	6–17	91
Low carbon steel	6–11	89
Medium carbon steel	6–12	89
Other alloy steel	6–18	92
Tool steel	6–14	90
Welding and cutting equipment (oxy-acet):		
Acetylene cylinders	5–5	51
Acetylene generators	5–4	50
Hose	5–11	58
Oxy-acetylene welding torch	5–9	55
Oxy-acetylene cylinders	5–6	52
Portable gas welding equipment	5–3	50
Regulator malfunctions and corrections	5–14	59
Setting up welding equipment	5–12	58

	Paragraphs	Page
Shutting down welding apparatus	5–13	59
Stationary gas welding equipment	5–2	49
Torch malfunctions and corrections	5–15	60
Welding tips and mixers	5–10	57
Welding artillery equipment	9–14	175
Metals used in fabrication	9–15	175
Repairs on artillery equipment	9–16	175
Welding automotive equipment	9–7	171
Cast iron, cast steel, carbon steel and forgings	9–9	172
Combat tank repairs	9–13	173
Determining the welding method	9–8	172
Heat treated parts	9–10	172
Tractor repairs	9–12	173
Welding truck components	9–11	172
Welding, brazing and soldering of nonferrous metals (oxy-acet):		
Aluminum brazing	6–23	96
Aluminum soldering	6–24	97
Aluminum welding	6–22	94
Brass and bronze welding	6–28	101
Braze welding	6–27	99
Bronze surfacing	6–36	107
Copper brazing	6–26	99
Copper welding	6–25	98
Lead welding	6–34	106
Magnesium brazing	6–30	103
Magnesium soldering	6–31	104
Magnesium welding	6–29	102
Nickel soldering	6–33	105
Nickel welding	6–32	102
Silver (brazing) soldering	6–38	108
Welding current, voltage, and adjustment	7–2	117
Welding, description and types of:		
Arc welding	3–2	19
Flow welding	3–7	22
Forge welding	3–5	21
Gas welding	3–4	21
Induction welding	3–9	22
Resistance welding	3–8	22
Thermit welding	3–3	21
Welding face hardened armor plate	9–23	186
Welding gun	5–21	65
Welding machines, safety precautions	4–7	43
Welding methods, automotive	9–8	172
Welding operations for military equipment	9–1	170
Determining weldable parts	9–4	171
Identifying metals	9–3	171
Primary precautions	9–6	171
Selecting the proper procedure	9–5	171
Sizing up the job	9–2	170
Welding positions, description of	3–21	29
Welding procedure, oxy-acetylene	6–1	80
Welding procedure, resistance welding	8–5	164
Welding procedure, thermit welding	8–11	168
Welding process, other than arc and oxy-acetylene:		
Forge welding	8–2c	163
Resistance welding	8–2a	163
Thermit welding	8–2b	163
Welding stress, description of	3–25	36
Welding symbols	11–4	212
Welding symbols, plug and spot welding	11–22	221
Welding terms	12–3	233
Welding terms, glossary of	12–1	233
White metal welding (oxy-acet)	6–35	106
Working pressure for welding operations (oxy-acet)	6–2	80
Wrought aluminum and magnesium temper-designation	2–7	13

X

X-ray test	10–13	207

By Order of the Secretary of the Army:

HAROLD K. JOHNSON,
General, United States Army,
Chief of Staff.

Official:

KENNETH G. WICKHAM,
Major General, United States Army,
The Adjutant General.

DISTRIBUTION:

Active Army:

DCSLOG (2)
CNGB (1)
TSG (1)
CofEngrs (1)
OACSC-E (1)
Dir of Trans (1)
USAAESWBD (1)
USA Arty Bd (2)
USAATBD (2)
USCONARC (3)
USAMC (10)
ARADCOM (2)
ARADCOM Rgn (2)
OS Maj Comd (3) except
CINCUSAREUR (5)
LOGCOMD (3)
USAWECOM (75)
USAAVCOM (2)
USAMECOM (1)
USACDCEC (10)
MDW (1)
Armies (3) except
Seventh USA (5)
Eighth USA (5)
Corps (2)
USAC (2)
Div (2)
Regt/gp/bat gp (1)
Bn (1)
Co (1)
Instl (2) except
Ft Sill (6)
Ft Bliss (9)
Ft Sam Houston (7)
USAECFB (3)
WSMR (2)
USMA (2)
Svc Colleges (3)
PMS Sr Div Ord Units (1)
Br Svc Sch (8) except
USACMLCS (13)
USAARMS (11)
USATSCH (18)
Arsenals (3) except
Rock Island (5)
Detroit (5)
Army Dep (3) except
TOAD (5)
LEAD (8)
ANAD (10)
Gen Dep (2)
APG (5)
BAMC (1)
MAAG (1) except
USARV (10)
POE (1)
Mil Msn (1)
JBUSMC (2)
JUSMAAG (2)
USAAPSA (1)
USAATC (3)
USACOMZEUR (5)
Engr FLDMS (3)
QM FLDMS (3)
TC FLDMS (3)
Ft Knox FLDMS (10)
USARMIS (Ecuador) (2)
Dept of Tng Pub, USAECFB (2)
USA Comm Det, Taiwan (1)
Fld Comd DASA (1)
Units org under fol TOE:—2 ea.
5-500(ALL)
9-500(ALL)
10-500(ALL)
29-500(DD)

NG: State AG (3); Units—Same as Active Army except allowance is one (1) copy each.

USAR: None.

For explanation of abbreviations used, see AR 320-50.